SEMS-RM DOCID # 100016416

Boyd Tisi No. 2 (#135)

Removal Site Evaluation Report

Final | October 4, 2018



Stantec

NAVAJO NATION
AUM Environmental Response Trust-First Phase

Boyd Tisi No. 2 (#135) Removal Site Evaluation Report - Final

October 4, 2018

Prepared for:

Navajo Nation AUM Environmental Response Trust – First Phase

Prepared by:

Stantec Consulting Services Inc.

Title and Approval Sheet

Title: Boyd Tisi No.2 Removal Site Evaluation Report - Final

Approvals

This Removal Site Evaluation Report is approved for implementation without conditions.

Dr. Donald Benn
Navajo Nation Environmental Protection Agency
Executive Director

Date: 10/5/18

Linda Reeves
US Environmental Protection Agency, Region 9
Remedial Project Manager

Date: 10/18/18

Sadie Hoskie
Navajo Nation AUM Environmental Response Trust – First Phase
Trustee

Date: 10/23/2018

Toby Leeson, P.G.
Stantec Consulting Services, Inc.
Project Technical Lead

Date: 10/23/2018

Revision Log

Revision No.	Date	Description
0	November 22, 2017	Submission of Draft RSE report to Agencies for review
	October 4, 2018	Submission of Final RSE report to Agencies

Stantec

NAVAJO NATION

Sign-off Sheet

This document entitled *Boyd Tisi No. 2 Removal Site Evaluation Report* was prepared by MWH, now part of Stantec Consulting Services Inc. (Stantec) on behalf of the Navajo Nation AUM Environmental Response Trust – First Phase (the "Client") for submittal to the Navajo Nation Environmental Protection Agency (NNEPA) and United States Environmental Protection Agency (USEPA) (collectively, the "Agencies"). The material in it reflects Stantec's professional judgment in light of the scope, schedule and other limitations stated in the document and in the contract between Stantec and the Client. The opinions in the document are based on conditions and information existing at the time the document was published and do not take into account any subsequent changes. In preparing the document, Stantec did not verify information supplied to it by others. Any use which a third party makes of this document is the responsibility of such third party. Such third party agrees that Stantec shall not be responsible for costs or damages of any kind, if any, suffered by it or any other third party as a result of decisions made or actions taken based on this document.

Per the *Navajo Nation AUM Environmental Response Trust Agreement – First Phase*, *Section 5.4.1,* (United States [US], 2015) the following certification must be signed by a person who supervised or directed the preparation of the Removal Site Evaluation report: "Under penalty of law, I certify that to the best of my knowledge, after appropriate inquiries of all relevant persons involved in the preparation of this report, the information submitted herein is true, accurate, and complete. I am aware that there are significant penalties for submitting false information, including the possibility of fine and imprisonment for knowing violations."

Prepared by 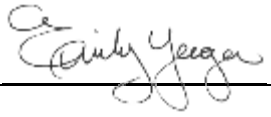

(signature)

Emily Yeager, P.G.

Reviewed by 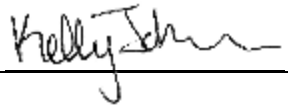

(signature)

Kelly Johnson, PhD, P.G.

Approved by 

(signature)

Toby Leeson, P.G.

Table of Contents

1.0 INTRODUCTION 1.1
1.1 BACKGROUND 1.1
1.2 OBJECTIVES AND PURPOSE OF THE REMOVAL SITE EVALUATION 1.2
1.3 REPORT ORGANIZATION 1.4

2.0 SITE HISTORY AND PHYSICAL CHARACTERISTICS 2.1
2.1 SITE HISTORY AND LAND USE 2.1
2.1.1 Mining Practices and Background 2.1
2.1.2 Ownership and Surrounding Land Use 2.2
2.1.3 Site Access 2.2
2.1.4 Previous Work at the Site 2.2
2.2 PHYSICAL CHARACTERISTICS 2.4
2.2.1 Regional and Site Physiography 2.4
2.2.2 Geologic Conditions 2.4
2.2.3 Regional Climate 2.6
2.2.4 Surface Water Hydrology 2.6
2.2.5 Vegetation and Wildlife 2.7
2.2.6 Cultural Resources 2.7
2.2.7 Observations of Potential Mining and Reclamation 2.7

3.0 SUMMARY OF SITE INVESTIGATION ACTIVITIES 3.1
3.1 INTRODUCTION 3.1
3.2 SUMMARY OF SITE CLEARANCE ACTIVITIES 3.3
3.2.1 Desktop Study 3.3
3.2.2 Field Investigations 3.4
3.3 SUMMARY OF REMOVAL SITE EVALUATION ACTIVITIES 3.11
3.3.1 Baseline Studies Activities 3.11
3.3.2 Site Characterization Activities and Assessment 3.15
3.3.3 Identification of TENORM Areas 3.19
3.4 DATA MANAGEMENT AND DATA QUALITY ASSESSMENT 3.20
3.4.1 Data Management 3.20
3.4.2 Data Quality Assessment 3.20

4.0 FINDINGS AND DISCUSSION 4.1
4.1 BACKGROUND REFERENCE AREA STUDY RESULTS AND CALCULATION OF INVESTIGATION LEVELS 4.1
4.2 SITE GAMMA RADIATION SURVEY RESULTS AND PREDICTED RADIUM-226 CONCENTRATIONS 4.3
4.2.1 Site Gamma Radiation Results 4.3
4.2.2 Gamma Correlation Results 4.5
4.3 SOIL METALS AND RADIUM-226 ANALYTICAL RESULTS 4.7
4.4 CONSTITUENTS OF POTENTIAL CONCERN 4.9
4.5 AREAS THAT EXCEED THE INVESTIGATION LEVELS 4.10

4.6 AREAS OF TENORM AND NORM 4.10
4.7 TENORM VOLUME ESTIMATE 4.13
4.8 POTENTIAL DATA GAPS AND SUPPLEMENTAL STUDIES 4.14
4.8.1 Data Gaps 4.14
4.8.2 Supplemental Studies 4.15

5.0 SUMMARY AND CONCLUSIONS 5.1

6.0 ESTIMATE OF REMOVAL SITE EVALUATION COSTS 6.1

7.0 REFERENCES 7.1

LIST OF TABLES

Table 3-1 Identified Water Features

Table 3-2 Soil Sampling Summary

Table 3-3 Mine Feature Samples and Area

Table 4-1 Background Reference Area Soil Sample Analytical Results

Table 4-2 Static Gamma Measurement Summary

Table 4-3 Gamma Correlation Study Soil and Sediment Sample Analytical Results

Table 4-4 Site Characterization Soil and Sediment Sample Analytical Results

Table 4-5 Summary of Investigation Level Exceedances in Soil at Borehole Locations

LIST OF FIGURES

Figure 1-1 Site Location

Figure 2-1 Site Features

Figure 2-2 Historical Mine Drawing Overlay

Figure 2-3 Regional Aerial Photograph

Figure 2-4 Regional Topographic Map

Figure 2-5 Site Map

Figure 2-6 Regional Geology

Figure 2-7 Site Geology

Figure 2-8a Cross-Section A-A'

Figure 2-8b Cross-Section B-B'

Figure 3-1a Historical Aerial Photograph Comparison

Figure 3-1b 1982 Historical Aerial Photograph Comparison

Figure 3-2 Potential Background Reference Areas

Figure 3-3 Background Reference Area - Sample Locations

Figure 3-4 Gamma Radiation Survey Area

Figure 3-5 Gamma Correlation Study Locations

Figure 3-6 Site Characterization Surface and Subsurface Sample Locations

Figure 4-1 Gamma Radiation Survey Results

Figure 4-2a Predicted Concentrations of Ra-226 in Soil Using the Correlation Equation

Figure 4-2b Predicted Ra-226 Concentrations in Soil Compared to Ra-226 Concentrations in Soil/Sediment

Figure 4-2c Surface Predicted Ra-226 Concentrations in Soil Compared to Ra-226 ILs

Figure 4-3 Surface and Subsurface Metals and Ra-226 Analytical Results

Figure 4-4 Lateral Extent of Surface and Subsurface IL Exceedances

Figure 4-5 Vertical Extent of IL Exceedances in Unconsolidated Material

Figure 4-6 TENORM Compared to Lateral Extent of IL Exceedances

Figure 4-7 TENORM Compared to Gamma Radiation Survey Results

Figure 4-8a TENORM that Exceeds ILs

Figure 4-8b TENORM that Exceeds ILs Compared to Mining Related Features

Figure 4-9 Volume Estimate of TENORM that Exceeds ILs

LIST OF APPENDICES

Appendix A – Radiological Characterization of the Boyd Tisi No. 2 Abandoned Uranium Mine

Appendix B – Site Photographs

Appendix C - Field Activity Forms

C.1 Soil Sample Field Forms

C.2 Drilling and Hand Auger Borehole Logs

Appendix D –Evaluation of RSE Data

D.1 Background Reference Area Selection

D.2 Statistical Evaluation

Appendix E – Cultural and Biological Resource Clearance Documents

Appendix F - Data Usability Report, Laboratory Analytical Data, and Data Validation Reports

F.1 Data Usability Report

F.2 Laboratory Analytical Data and Data Validation Reports

LIST OF ATTACHMENTS – PROVIDED ELECTRONICALLY TO THE AGENCIES

- Site-specific geodatabase
- Tabular database files
- 2017 Cooper aerial survey orthophotographs and data files
- Historical documents referenced in this RSE Report (refer to Section 7 for complete citation)
    - Chenoweth and Malan, 1973 – The uranium deposits of northeastern Arizona, New Mexico Geological Society 24 Annual Fall Field Conference Guidebook p. 139-149
    - Chenoweth, 1993 – Geology and Production History of the Uranium Ore Deposits in the Cameron Area, Coconino County, Arizona
    - Hendricks, 2001 – An Aerial Radiological Survey of Abandoned Uranium Mines in the Navajo Nation
    - NAML, 1993 – Cameron Project 2 Contract Documents
    - NAML, 1995 – Close Out Report FY 94, Cameron Project No. 2
    - Scarborough, 1981 – Radioactive Occurrences and Uranium Production in Arizona, Final Report
    - USEPA, 2007a – Abandoned Uranium Mines and the Navajo Nation. Navajo Nation AUM Screening Assessment Report and Atlas with Geospatial Data
    - Weston Solutions, 2011 - Navajo Abandoned Uranium Mine Site Screen Report for Boyd Tisi No. 2 Western

Executive Summary

Introduction

The Boyd Tisi No.2 site (the Site) is located within the Navajo Nation, Tuba City Bureau of Indian Affairs (BIA) Agency, Cameron Chapter in northern Arizona. The Site is one of 46 "priority" abandoned uranium mines (AUMs) within the Navajo Nation selected by the United States Environmental Protection Agency (USEPA) in collaboration with the Navajo Nation Environmental Protection Agency (NNEPA) for further evaluation based on radiation levels and potential for water contamination (USEPA, 2013). Mining for uranium occurred prior to, during, and after World War II, when the United States (US) sought a domestic source of uranium located on Navajo lands (USEPA, 2007a).

On April 30, 2015, the *Navajo Nation AUM Environmental Response Trust Agreement – First Phase* (the *Trust Agreement*) became effective. The *Trust Agreement* was made by and among the US, as Settlor and as Beneficiary on behalf of the USEPA, the Navajo Nation, as Beneficiary, and the Trustee, Sadie Hoskie. The *Trust Agreement* was developed in accordance with a settlement on April 8, 2015 between the US and Navajo Nation for the investigation of 16 specified priority AUMs. The priority sites were selected by the US and Navajo Nation, as described in the *Trust Agreement*:

> "based on two primary criteria, specifically, demonstrated levels of Radium-226[1]: (a) at or in excess of 10 times the background levels and the existence of a potentially inhabited structure located within 0.25 miles of AUM features; or (b) at or in excess of two times background levels and the existence of a potentially inhabited structure located within 200 feet (ft)."

The purpose of this report is to summarize the objectives, field investigation activities, findings, and conclusions of Site Clearance and Removal Site Evaluation (RSE) activities conducted between August 2015 and September 2017 at the Site. The primary objectives of the RSEs are to provide data required to evaluate relevant site conditions and to support future removal action evaluations at the Sites. It is not intended to establish cleanup levels or determine cleanup options or potential remedies. The purpose of the RSE data (e.g., the review of relevant information and the collection of data related to historical mining activities) is to determine the volume of technologically enhanced naturally occurring radioactive material (TENORM) at the Site in excess of Investigation Levels (ILs) as a result of historical mining activities. ILs are based on the background gamma measurements (in counts per minute [cpm]), and Radium-226 (Ra-226) and metals concentrations, determined through statistical analyses, that are used to evaluate potential mining-related impacts. .

[1] The Agencies selected the priority mines based on gamma radiation but the *Trust Agreement* erroneously states "levels of Radium -226".

Site History and Physical Characteristics

The Site is located within the Colorado Plateau physiographic province, which is an area of approximately 240,000 square miles in the Four Corners region of Utah, Colorado, Arizona, and New Mexico. Bedrock outcrops on-site consist of sandstone and siltstone with lesser amounts of conglomerate and shale of the Petrified Forest Member of the Triassic Chinle Formation. The ore mined on-site consisted of fine-grained sandstone that filled elongate fluvial channels, of the Petrified Forest Member. The Site is also located within the Little Colorado River Valley Watershed, an area of approximately 27,000 square miles spanning Arizona and New Mexico. Topographically the Site is located on relatively flat ground and adjacent to Tanner Wash. The elevation on-site is approximately 4,180 ft above mean sea level. On-site overland surface water flow, when present, drains either to Tanner Wash or terminates within the unconsolidated deposits.

The Site is located in the Cameron, Arizona region and mining on-site occurred from 1957 to 1958. Historical mine workings on-site consisted of an open pit. Total ore production from the Site was 793.61 tons (approximately 1,587,220 pounds) of ore that contained 4,758.43 pounds of 0.30 percent U_3O_8 (uranium oxide) and 599 pounds of 0.06 percent V_2O_5 (vanadium oxide). Mining at the Site ended in July 1958.

In 1993, the Site was included in a reclamation bid document for the reclamation of 11 AUMs, referred to as the Cameron Project No. 2 (NAML, 1993). In 1995, a reclamation program closeout report for the Cameron Project No. 2 was submitted to the Navajo Abandoned Mine Lands Reclamation Program (NAML) Window Rock Administration (NAML, 1995). The closeout report stated that the Cameron Project No. 2 was complete and provided reclamation activity accomplishments by project and not by individual AUM. Therefore, the Trust could not verify that the proposed reclamation activities were done at the Boyd Tisi Trust Site specifically. However, in 2007 the Site was listed by the EPA as reclaimed (USEPA, 2007a). In 2011, Weston Solutions (Weston) performed site screening on behalf of the USEPA. The screening included: (1) recording site observations (i.e., number of homes, water sources, and sensitive environments[2] around the Site); (2) recording the type, number, and reclamation status of mine features; and (3) performing a surface gamma survey.

Summary of Removal Site Evaluation Activities

The Trust's RSE was performed in accordance with the *Site Clearance Work Plan* (MWH, 2016a) and the *Removal Site Evaluation Work Plan* ([*RSE Work Plan*] MWH, 2016b). The *Site Clearance Work Plan* and the *RSE Work Plan* were approved in April and October 2016, respectively, by the NNEPA and the USEPA (collectively, the Agencies). The Trust conducted Site Clearance activities as the initial task for the RSE work to obtain information necessary to develop the *Removal Site Evaluation Work Plan* ([*RSE Work Plan*] MWH, 2016b). Following Site Clearance activities, the Trust conducted two sequential tasks to complete the RSE: Baseline Studies activities and Site

[2] Weston defined sensitive environments as "all sensitive environments located within visible range of the mine site, including: wetlands, endangered species, habitats and approximate locations of sites that may be under protection of the government of the Navajo Nation"

Characterization Activities and Assessment. Details of the Site Clearance activities, Baseline Studies activities, and Site Characterization and Assessment activities are as follows:

- **Site Clearance activities** consisted of a desktop study of historical information, site mapping, potential background reference area evaluation, biological (vegetation and wildlife) surveys, and cultural resource survey. Results of the Site Clearance activities provided historical information, site access information, potential background reference area data, and vegetation, wildlife, and cultural clearance of the Site for the Baseline Studies activities and Site Characterization and Assessment activities to commence.

- **Baseline Studies activities** included a background reference area study, site gamma radiation surveys, and a Gamma Correlation Study. Results of the Baseline Studies were used to plan and prepare the Site Characterization Activities and Assessment. Data collected in the background reference area (soil sampling, laboratory analyses, surface gamma surveying, and subsurface static gamma measurements) were used to establish ILs for the Site. Data collected from the site gamma radiation survey were used, along with sampling, to evaluate potential mining-related impacts in areas containing radionuclides. The Gamma Correlation Study objectives were to determine the correlations between: (1) gamma measurements and concentrations of Ra-226 in surface soils; and (2) gamma measurements and exposure rates; to use as screening tools for site assessments.

- **Site Characterization Activities and Assessment** included surface soil and sediment sampling, and subsurface soil sampling. The results of the surface and subsurface soil and sediment sampling analyses were used to evaluate mining impacts and define the lateral and vertical extent of TENORM at the Site.

Findings and Discussion

Surface and subsurface soil and sediment sampling results. One background reference area was selected to develop surface gamma, subsurface static gamma, Ra-226, and metals ILs for the Site. Arsenic, molybdenum, uranium, and Ra-226 concentrations and gamma radiation measurements in soil/sediment exceeded their respective ILs and are confirmed constituents of potential concern (COPCs) for the Site. An IL for selenium was not identified because selenium sample results were non-detect in the background area. However, because selenium was detected in soil/sediment samples from the Survey Area (i.e., the full areal extent of the Site surface gamma survey), it is also confirmed as a COPC for the Site. Based on the data analyses performed for this report along with the multiple lines of evidence, approximately 3.9 acres, out of the 21.2 acres of the Survey Area (i.e., the full areal of the Site surface gamma survey), were estimated to contain TENORM. Of the 3.9 acres that contain TENORM, 1.9 acres contain TENORM exceeding the surface gamma IL. The volume of TENORM in excess of ILs was estimated to be 3,371 cubic yards (yd^3) (2,577 cubic meters).

Gamma Correlation Study results. The Gamma Correlation Study indicated that surface gamma survey results correlate with Ra-226 concentrations in soil. Therefore, gamma surveys could be used during site assessments as a field screening tool to estimate Ra-226 concentrations in soil, where sampling or gamma surveys are not available. The model was made of the correlation results predicting the concentrations of Ra-226 in surface soils from the mean of the gamma

measurements in five correlation locations. Additional correlation studies may be needed to refine the relationship between gamma and Ra-226.

Based on the Site Clearance and RSE data collection and analyses for the Site, potential data gaps were identified and are presented in Section 4.8 of this RSE report. These potential data gaps can be taken into consideration for subsequent evaluations in support of future Removal or Remedial Action evaluations at the Site.

Acronyms/Abbreviations

°F	degrees Fahrenheit
e.g.	exempli gratia
etc.	et cetera
ft	feet
ft^2	square feet
i.e.	id est
mg/kg	milligram per kilogram
µR/hr	microRoentgens per hour
pCi/g	picocuries per gram
Adkins	Adkins Consulting Inc.
ags	above ground surface
amsl	above mean sea level
AUM	abandoned uranium mine
bgs	below ground surface
BIA	Bureau of Indian Affairs
CCV	continuing calibration verification
C.F.R	Code of Federal Regulations
COPC	constituent of potential concern
cpm	counts per minute
Dinétahdóó	Dinétahdóó Cultural Resource Management
DMP	Data Management Plan
DQO	Data Quality Objective
ERG	Environmental Restoration Group, Inc.
ESA	Endangered Species Act
FSP	Field Sampling Plan
GIS	geographic information system
GPS	global positioning system
HASP	Health and Safety Plan
ICAL	initial calibration
ICB/CCB	initial/continuing calibration blank
ICV	initial calibration verification
IL	Investigation Level
LCS/LCSD	laboratory control sample/laboratory control sample duplicate

MARSSIM	Multi-agency Radiation Survey and Site Investigation Manual
MBTA	Migratory Bird Treaty Act
MLR	Multivariate Linear Regression
MS/MSD	matrix spike/matrix spike duplicate
MWH	MWH, now part of Stantec Consulting Services Inc. (formerly MWH Americas, Inc.)
NaI	sodium iodide
NAML	Navajo Abandoned Mine Lands Reclamation Program
NCP	National Oil and Hazardous Substances Pollution Contingency Plan
NNDFW	Navajo Nation Department of Fish and Wildlife
NNDOJ	Navajo Nation Department of Justice
NNDNR	Navajo Nation Division of Natural Resources
NNDWR	Navajo Nation Department of Water Resources
NNEPA	Navajo Nation Environmental Protection Agency
NNESL	Navajo Nation Endangered Species List
NNHP	Navajo Natural Heritage Program
NNHPD	Navajo Nation Historic Preservation Department
NORM	Naturally Occurring Radioactive Material
QA/QC	quality assurance/quality control
QAPP	Quality Assurance Project Plan
R^2	Pearson's Correlation Coefficient
Ra-226	Radium-226
Redente	Redente Ecological Consultants
RSE	Removal Site Evaluation
SOP	standard operating procedure
Stantec	Stantec Consulting Services Inc.
T&E	threatened and endangered
Th-230	thorium-230
Th-232	thorium-232
TENORM	Technologically Enhanced Naturally Occurring Radioactive Materials
U-235	uranium-235
U-238	uranium-238
U_3O_8	uranium oxide
UCL	upper confidence limit
US	United States
U.S.C.	United States Code
UTL	upper tolerance limit
USAEC	US Atomic Energy Commission
USEPA	US Environmental Protection Agency
USFWS	US Fish and Wildlife Service
USGS	U.S. Geological Survey
V_2O_5	vanadium oxide

Weston	Weston Solutions

Glossary

Alluvium – material deposited by flowing water.

Arroyo – a steep sided gully cut by running water in an arid or semiarid region.

Bin Range – as presented in the RSE report, a range of values to present surface gamma measurement data in relation to: (1) the surface gamma Investigation Level (IL); (2) multiples of the surface gamma IL; or (3) the mean and standard deviation of the predicted Radium-226 (Ra-226) concentrations for the Site based on the correlation equation.

Colluvium – unconsolidated, unsorted, earth material transported under the influence of gravity and deposited on lower slopes (Schaetzl and Thompson, 2015).

Composite sample – "Volumes of material from several of the selected sampling units are physically combined and mixed in an effort to form a single homogeneous sample, which is then analyzed" (USEPA, 2002).

Constituent of potential concern (COPC) – analytes identified in the *RSE Work Plan* where their levels were confirmed based on the results of the RSE.

Data Validation – "an analyte- and sample-specific process that extends the evaluation of data beyond, method, procedural, or contractual compliance (i.e., data verification) to determine the analytical quality of a specific data set" (USEPA, 2002).

Data Verification – "the process of evaluating the completeness, correctness and conformance/compliance of a specific data set against the method, procedural, or contractual requirements" (USEPA, 2002).

Earthworks - human-caused disturbance of the land surface.

Eolian – a deposit that forms as a result of the accumulation of wind-driven products from the weathering of solid bedrock or unconsolidated deposits.

Ephemeral – ephemeral streams flow only in direct response to surface runoff precipitation or melting snow, and their channels are at all times above the water table (USGS, 2003). This concept also applies to ephemeral ponds that contain water in response to surface runoff precipitation or melting snow and are at all times above the water table.

Ethnographic – relating to the scientific description of peoples and cultures with their customs, habits, and mutual differences.

Gamma – a type of radiation that occurs as the result of the natural decay of uranium.

Geomorphology – the physical features of the surface of the earth and their relation to its geologic structures (English Oxford Dictionary, 2018).

Grab sample – a sample collected from a specific location (and depth) at a certain point in time.

Investigation Level (IL) – based on the background gamma measurements (in counts per minute [cpm]) and, Radium-226 (Ra-226) and metals concentrations, determined through statistical analyses, that are used to evaluate potential mining-related impacts.

Isolated Occurrences – in relation to the Site Cultural Resource Survey: Any non-structural remains of a single event: alternately, any non-structural assemblage of approximately 10 or fewer artifacts within an area of approximately 10 square meters or less, especially if it is of questionable human origin or if it appears to be the result of fortuitous causes. The number and/or composition of observed artifact classes are a useful rule of thumb for distinguishing between a site and an isolate (NNHPD, 2016).

Mineralized – economically important metals in the formation of ore bodies that have been geologically deposited. For example, the process of mineralization may introduce metals, such as uranium, into a rock. That rock may then be referred to as possessing uranium mineralization (World Heritage Encyclopedia, 2017).

Naturally occurring radioactive material (NORM) – "materials which may contain any of the primordial radionuclides or radioactive elements as they occur in nature, such as radium, uranium, thorium, potassium, and their radioactive decay products, that are undisturbed as a result of human activities" (USEPA, 2017).

Pan Evaporation – evaporative water losses from a standardized pan.

Radium-226 (Ra-226) – a radioactive isotope of radium that is produced by the natural decay of uranium.

Remedial Action (or remedy) – "those actions consistent with permanent remedy taken instead of, or in addition to, removal action in the event of a release or threatened release of a hazardous substance into the environment, to prevent or minimize the release of hazardous substances so that they do not migrate to cause substantial danger to present or future public health or welfare or the environment…For the purpose of the National Oil and Hazardous Substances Pollution Contingency Plan (NCP), the term also includes enforcement activities related thereto" (USEPA, 1992).

Remove or removal – "the cleanup or removal of released hazardous substances from the environment; such actions as may be necessary taken in the event of the threat of release of hazardous substances into the environment; such actions as may be necessary to monitor, assess, and evaluate the release or threat of release of hazardous substances; the disposal of removed material; or the taking of such other actions as may be necessary to prevent, minimize,

or mitigate damage to the public health or welfare of the United States or to the environment, which may otherwise result from a release or threat of release…" (USEPA, 1992).

Residual Soil – soil formed in situ by rock decay and left as residue after the leaching out of the more soluble products.

Respond or response – "remove, removal, remedy, or remedial action, including enforcement activities related thereto" (USEPA, 1992).

Secular equilibrium – a type of radioactive equilibrium in which the half-life of the precursor (parent) radioisotope is so much longer than that of the product (daughter) that the radioactivity of the daughter becomes equal to that of the parent with time; therefore, the quantity of a radioactive isotope remains constant because its production rate is equal to its decay rate. In secular equilibrium the activity remains constant.

Static gamma measurement – stationary gamma measurement collected for a specific period of time (e.g., 60 seconds).

Technologically enhanced naturally occurring radioactive material (TENORM) – "naturally occurring radioactive materials that have been concentrated or exposed to the accessible environment as a result of human activities such as manufacturing, mineral extraction, or water processing", which includes disturbance from mining activities. Where "technologically enhanced means that the radiological, physical, and chemical properties of the radioactive material have been concentrated or further altered by having been processed, or beneficiated, or disturbed in a way that increases the potential for human and/or environmental exposures" (USEPA, 2017).

Thorium (Th) – "a naturally occurring radioactive metal found at trace levels in soil, rocks, water, plants and animals. Thorium (Th) is solid under normal conditions. There are natural and man-made forms of thorium, all of which are radioactive" (USEPA, 2017).

Th-230 – a radioactive isotope of thorium that is produced by the natural decay of thorium.

Th-232 – a radioactive isotope of thorium that is produced by the natural decay of thorium.

Upper Confidence Limit (UCL) – the upper boundary (or limit) of a confidence interval of a parameter of interest such as the population mean (USEPA, 2015).

Upper Tolerance Limit (UTL) – a confidence limit on a percentile of the population rather than a confidence limit on the mean. For example, a 95 percent one-sided UTL for 95 percent coverage represents the value below which 95 percent of the population values are expected to fall with 95 percent confidence. In other words, a 95 percent UTL with coverage coefficient 95 percent represents a 95 percent UCL for the 95th percentile (USEPA, 2015).

Uranium (U) – a naturally occurring radioactive element that may be present in relatively high concentrations in the geologic materials in the southwest United States.

U-235 – a radioactive isotope of uranium that is produced by the natural decay of uranium.

U-238 – a radioactive isotope of uranium that is produced by the natural decay of uranium.

Walkover gamma radiation survey – referred to as a scanning survey in the Multi-agency Radiation Survey and Site Investigation Manual (*MARSSIM*; USEPA, 2000). A walkover gamma radiation survey is the process by which the operator uses a portable radiation detection instrument to detect the presence of radionuclides on a specific surface (i.e., ground, wall) while continuously moving across the surface at a certain speed and in a certain pattern (USEPA, 2000). Referred to in the RSE report as surface gamma survey after the first mention in the report.

Wind rose – a circular graph depicting average wind speed and direction.

1.0 INTRODUCTION

1.1 BACKGROUND

This report summarizes the purpose and objectives, field investigation activities, findings, and conclusions of Site Clearance and Removal Site Evaluation (RSE) activities conducted between October 2015 and March 2017 at the Boyd Tisi No.2 site (the Site) located in northern Arizona, as shown in Figure 1-1. The Site is also identified by the United States Environmental Protection Agency (USEPA) as abandoned uranium mine (AUM) identification #135 in the *Navajo Nation AUM Screening Assessment Report and Atlas with Geospatial Data* (the *2007 AUM Atlas*; USEPA, 2007a). The *2007 AUM Atlas* was prepared for the USEPA in cooperation with the Navajo Nation Environmental Protection Agency (NNEPA) and the Navajo Abandoned Mine Lands Reclamation Program (NAML). The claim boundary polygon (refer to Figure 2-1) used for the RSE encompassed an area of approximately 7.1acres (309,276 square feet [ft^2]) and was provided as part of the *2007 AUM Atlas*. Per the *2007 AUM Atlas* this polygon and other factors represent the location and surface extent of the AUM.

Stantec Consulting Services Inc. (Stantec; formerly MWH), performed Site Clearance activities in accordance with the *Site Clearance Work Plan* (MWH, 2016a), and performed RSE activities in accordance with the *Removal Site Evaluation Work Plan* ([*RSE Work Plan*] MWH, 2016b). The *Site Clearance Work Plan* and the *RSE Work Plan* were approved in April and October 2016, respectively, by the NNEPA and the USEPA (collectively, the Agencies). Stantec conducted this investigation on behalf of Sadie Hoskie, Trustee pursuant to Section 1.1.21 of the *Navajo Nation AUM Environmental Response Trust Agreement – First Phase* (the *Trust Agreement*), effective April 30, 2015 (United States [US], 2015). The *Trust Agreement* is made by and among the US, as Settlor, and as Beneficiary on behalf of the USEPA, the Navajo Nation, as Beneficiary, and the Trustee. The *Trust Agreement* was developed in accordance with a settlement on April 8, 2015 between the US and Navajo Nation for the investigation of 16 specified "priority" AUMs.

A "Site" is defined in the *Trust Agreement* as:

> "each of the 16 AUMs listed on Appendix A to the Settlement Agreement, including the proximate areas where waste material associated with each such AUM has been deposited, stored, disposed of, placed, or otherwise come to be located." *Trust Agreement*, § 1.1.25.

The Site is one of 46 priority AUMs within the Navajo Nation selected by the USEPA in collaboration with the NNEPA for further evaluation based on radiation levels and potential for water contamination (USEPA, 2013). The 16 priority AUMs included in the *Trust Agreement* are located on Navajo Lands throughout southeastern Utah, northeastern Arizona, and western New Mexico, as shown in Figure 1-1. The 16 priority AUMs were selected by the US and Navajo Nation, as described in the *Trust Agreement*:

> "based on two primary criteria, specifically, demonstrated levels of Radium-226[3]: (a) at or in excess of 10 times the background levels and the existence of a potentially inhabited structure located within 0.25 miles of AUM features; or (b) at or in excess of two times background levels and the existence of a potentially inhabited structure located within 200 feet (ft)." *Trust Agreement*, Recitals.

In addition, the 16 priority AUMs are, for the purposes of this investigation, a subset of priority mines for which a viable private potentially responsible party has not been identified. Mining for uranium occurred prior to, during, and after World War II, when the US sought a domestic source of uranium located on Navajo lands (USEPA, 2007a). *Trust Agreement*, Recitals.

1.2 OBJECTIVES AND PURPOSE OF THE REMOVAL SITE EVALUATION

The primary objectives of the RSEs are to provide data required to evaluate relevant site conditions and to support future removal action evaluations at the Sites. It is not intended to establish cleanup levels or determine cleanup options or potential remedies. The purpose of the RSE data (e.g., the review of relevant information and the collection of data related to historical mining activities) is to determine the volume of technologically enhanced naturally occurring radioactive material (TENORM) at the Site in excess of Investigation Levels (ILs) as a result of historical mining activities. ILs are based on the background gamma measurements (in counts per minute [cpm]), and Radium-226 (Ra-226) and metals concentrations, determined through statistical analyses, that are used to evaluate potential mining-related impacts. The USEPA (2017) defines TENORM as:

> "naturally occurring radioactive materials that have been concentrated or exposed to the accessible environment as a result of human activities such as manufacturing, mineral extraction, or water processing" (mine waste or other mining-related disturbance).
>
> "Technologically enhanced means that the radiological, physical, and chemical properties of the radioactive material have been concentrated or further altered by having been processed, or beneficiated, or disturbed in a way that increases the potential for human and/or environmental exposures."

An understanding of the extent and volume of TENORM that exceeds the ILs at the Site is key information for future Removal or Remedial Action evaluations, including whether, and to what extent, a Response Action is warranted under federal and Navajo law. Definitions presented in the glossary for "Removal", "Remedial Action", and "Response" are defined in 40 Code of Federal Regulations (CFR) Section 300.5 of the National Oil and Hazardous Substances Pollution Contingency Plan (NCP; USEPA, 1992).

[3] The Agencies selected the priority mines based on gamma radiation but the *Trust Agreement* erroneously states "levels of Radium -226".

The Trust conducted Site Clearance activities to obtain information necessary to develop the *RSE Work Plan*. Site Clearance activities consisted of two separate tasks: a "desktop" study (e.g., literature and historical documentation review) and field activities.

Desktop study – included review of readily available and reasonably ascertainable information including:

- Historical and current aerial photographs to identify any potential historical mining features, and to identify if buildings, homes and/or other structures, and potential haul roads were present within 0.25 miles of the Site
- Topographic and geologic maps
- Available data concerning perennial surface water features and water wells
- Previous studies and reclamation activities
- Meteorological data (e.g., predominant wind direction in the region of the Site)

Site Clearance field activities – included the following:

- Site reconnaissance to evaluate in the field: access routes to the Site, location of site boundaries, and observations presented in the Weston Solutions (Weston)(2011) report
- Mapping of site features and boundaries
- Evaluation of potential background reference areas
- Biological surveys (wildlife and vegetation)
- Cultural resource surveys

Following Site Clearance activities, two sequential tasks were conducted to complete the RSE: Baseline Studies and Site Characterization and Assessment. Baseline Studies activities were completed to establish the basis for the Site Characterization and Assessment activities.

Baseline Studies activities – included the following:

- Background Reference Area Study – walkover gamma radiation survey (referred to hereafter as surface gamma survey), subsurface static gamma radiation measurements (referred to hereafter as subsurface static gamma measurements), surface and subsurface soil sampling, and laboratory analyses
- Site gamma survey – surface gamma survey
- Gamma Correlation Study – co-located surface static gamma measurements and exposure-rate measurements at fixed points, high-density surface gamma surveys (intended to cover 100 percent of the survey area), surface soil/sediment sampling, and laboratory analyses

Site Characterization Activities and Assessment – included the following:

- Characterization of surface soils and sediment – surface soil and sediment sampling and laboratory analyses.

- Characterization of subsurface soils – static gamma measurements (at surface and subsurface hand auger and drilling borehole locations), and subsurface sampling and laboratory analyses. Hand auger and drilling borehole locations are referred to hereafter as boreholes.

Details regarding the Site Clearance activities are provided in the *Boyd Tisi No. 2 Western Site Clearance Data Report* (*Site Clearance Data Report*; MWH, 2016c) and summarized in Section 3.2 of this report. Details regarding the Baseline Study activities are provided in the *Boyd Tisi No. 2 Western Site Baseline Studies Field Report* (Stantec, 2017) and summarized in Section 3.3 of this report. Details regarding the Site Characterization Activities and Assessment are provided in Section 3.3 of this report. Findings are presented in Section 4.0 of this report.

1.3 REPORT ORGANIZATION

This report presents a comprehensive discussion of all RSE activities, including applicable aspects of the outline suggested in the *Multi-Agency Radiation Survey and Site Investigation Manual – Appendix A* ([*MARSSIM*] USEPA, 2000), and consists of the following sections:

Executive Summary – Presents a concise description of the principal elements of the RSE report.

Section 1.0 Introduction – Describes the purpose and objectives of the RSE process, and organization of this RSE report.

Section 2.0 Site History and Physical Characteristics – Presents the history, land use, and physical characteristics of the Site.

Section 3.0 Summary of Site Investigation Activities – Summarizes the Site Clearance and RSE activities.

Section 4.0 Findings and Discussion – Presents the results of the Site Clearance and RSE activities, areas that exceed ILs, areas of Naturally Occurring Radioactive Material (NORM) and TENORM, and the volume of TENORM that exceeds the ILs. Potential data gaps are also presented, as applicable.

Section 5.0 Summary and Conclusions – Summarizes data and presents conclusions based on results of the investigations completed to date.

Section 6.0 Estimate of Removal Site Evaluation Costs – A statement of actual or estimated costs incurred in complying with the *Trust Agreement*, as required by the *Trust Agreement*.

Section 7.0 References – Lists the reference documents cited in this RSE report.

Tables Included at the end of this RSE report.

Figures Included at the end of this RSE report.

Appendices – Appendices A through F.1 are included at the end of this RSE report and Appendix F.2 is provided as a separate electronic file due to its file size and length.

- **Appendix A** – Includes the radiological characterization report for the Site
- **Appendix B** – Includes photographs of the Site
- **Appendix C** – Includes copies of RSE field activity forms
- **Appendix D** – Provides the potential background reference areas selection and the methods and results of the statistical data evaluation for the Site
- **Appendix E** – Includes the biological evaluation report and the biological and cultural resources compliance forms
- **Appendix F** – Includes the Data Usability Report, laboratory analytical data, and data validation reports for the RSE analyses

Attachments – Site-specific geodatabase, tabular database files, and available historical documents referenced in this RSE report.

2.0 SITE HISTORY AND PHYSICAL CHARACTERISTICS

2.1 SITE HISTORY AND LAND USE

2.1.1 Mining Practices and Background

The Site is located on the Navajo Nation, in northern Arizona and approximately 2.5 miles east of Cameron, Arizona, as shown in Figure 1-1 inset. The Site is also located east of Indian Route 6730, as shown in Figure 2-1.

Based on historical data provided in Chenoweth (1993), the following information was obtained. In 1950, uranium exploration began in the Cameron region after the discovery of an outcrop that contained yellow-colored material. The outcrop was located on the Ward Terrace, at the foot of the Moenkopi Plateau, approximately nine miles southeast of the Site. Samples of the yellow-colored material were sent to the US Atomic Energy Commission (USAEC) and to Lorenzo Hubbell Trading Post in Winslow, Arizona for analyses. Results of the analyses confirmed the presence of uranium and vanadium in the samples. In March 1951, the United States Geological Survey (USGS) and the USAEC examined the locations where the samples were collected. In August 1951, the Hosteen Nez Mining Company shipped the first uranium ore from the Cameron region (1.05 tons) to USAEC's ore-buying station in Monticello, Utah. Mining and production in the Cameron region reached a peak in 1956 when 19 companies mining 55 properties in the Cameron region produced approximately 84,800 tons of ore averaging 0.21 percent uranium oxide (U_3O_8). Eleven mine claim boundaries were located within 1.25 miles of the Site, as shown in Figure 2-1. The Juan Horse No. 3 claim borders the Site on the southeast.

In 1957, Klaner and Associates began mining at the Site. The ore body at the Site was within the Petrified Forest Member of the Triassic Chinle Formation and the ore occurred along lenticular channel sandstones, identified in rock core logs from the region, as radioactive anomalies around outcrops of the Chinle Formation (Scarborough, 1981). Scarborough (1981) reported that the ore zone at the Site was approximately 3 ft thick and was mined by excavating an open pit that measured150 ft long by 50 ft wide by 45 ft deep. Total ore production from the Site was 793.61 tons (approximately 1,587,220 pounds) of ore that contained 4,758.43 pounds of 0.30 percent U_3O_8 and 599 pounds of 0.06 percent V_2O_5 (vanadium oxide) (Chenoweth, 1993). Mining at the Site ended in July 1958.

After 1958, uranium production in the Cameron region began to decline and the last shipment of uranium ore from the Cameron region was shipped either in 1961, according to the USAEC production records (USEPA, 2007a) or in January 1963, according to Chenoweth (1993) and totaled less than 400 tons.

2.1.2 Ownership and Surrounding Land Use

The Site is located within the Navajo Nation, Tuba City Bureau of Indian Affairs (BIA) Agency in Section 30 of Township 29 North, Range 10 West, Gila and Salt River Principal Meridian. Land ownership where the Site is located falls under Navajo Trust lands. The Site is located within the Cameron Chapter of the Navajo Nation, as shown in Figure 1-1, and is in Grazing Unit 3, as designated by the Navajo Nation Division of Natural Resources (NNDNR, 2006). The Site is currently uninhabited. However, two home-sites and several out-buildings are located within 0.25 miles of the Site, as shown in Figure 2-1.

2.1.3 Site Access

In 2015, the Navajo Nation Department of Justice (NNDOJ) provided the Trustee with legal access to all Navajo Trust lands to implement work in accordance with the *Trust Agreement*. The Trustee also obtained individual written access agreements from residents living at or near the Site, or with an interest in lands at or near the Site, such as home-site leases and grazing rights, as applicable. In addition, the Trustee consulted with the Cameron Chapter officials and nearby residents and notified them of the work.

2.1.4 Previous Work at the Site

2.1.4.1 1993 Cameron Project No. 2 Invitation for Reclamation Bids

In 1993, NAML issued an invitation for bids for the reclamation of 11 AUMs, referred to as the Cameron Project No. 2 (NAML, 1993). The Site was included in the Cameron Project No. 2 bid document, which stated that the area of disturbance on-site was approximately six acres and contained five waste piles totaling 12,060 cubic yards (yd^3) of material. The bid document also included a historical drawing of the Site showing the location of five waste piles (shown in Figure 2-2 as WP1 through WP5) and a historical pit. For comparison, the historical NAML (1993) drawing is overlain on the current image of the Site in Figure 2-2. When the historical drawing was georeferenced the historical claim boundary (shown on the historical drawing in dashed purple) did not line up with the Site claim boundary (shown in Figure 2-2 in red). Figure 2-2 also shows a contour interval for the historical pit of 1 ft to 4 ft below ground surface (bgs). This is in contradiction to Scarborough's (1981) reported historical pit depth of 45 ft bgs. The bid document listed the following reclamation activities were needed for the Site:

- Improve access to the Site.
- Improve access to the pit.
- Excavate the sediment-filled pit and save the excavated material for topsoil. Prior to this bid document being issued the pit had been partially filled with sediment from Tanner Wash (refer to Figure 2-1 for the location of Tanner Wash).
- Excavate waste piles and place into the pit.

- Re-grade the disturbed areas to a slope of 5h:1v (horizontal to vertical) or less.

2.1.4.2 1995 Cameron Project No. 2 Closeout Report

In 1995, the Tuba City NAML Reclamation Program submitted a reclamation program closeout report for the Cameron Project No. 2 to the NAML Reclamation Window Rock Administration (NAML, 1995). The closeout report stated that the Cameron Project No. 2 was complete and listed the following reclamation activity accomplishments at the11 AUMs: "6,638 linear ft of dangerous high-wall eliminated, 10 open pits backfilled (17.7 acres of pits,) 26 acres of dangerous piles and embankments eliminated, and 47.65 acres of waste rock used to back-fill open pits" (NAML, 1995). The closeout report provided reclamation activity accomplishments by project and not by AUM; therefore, the Trust could not verify that the proposed reclamation activities listed above were done at the Trust Site specifically. However, the *2007 AUM Atlas* lists the Site as reclaimed by NAML.

2.1.4.3 1994 through 1999 Aerial Radiological Surveys

Between 1994 and 1999, aerial radiological surveys were conducted at 41 geographical areas within the Navajo Nation, including the Cameron area, which included the location of the Site (Hendricks, 2001). The surveys were done at the request of the USEPA Region 9 and were performed by the Remote Sensing laboratory, a US Department of Energy facility, National Nuclear Security Administration Nevada Operations Office. The intent of the surveys was to characterize the overall radioactivity levels and excess bismuth-214 activity (i.e., a radioisotope that is an indicator of uranium ore deposits and/or uranium mines) within the surveyed areas. Data collected from the surveys was used to assess the risks (i.e., average gross exposure rate) in mined areas and to determine what action, if any, was needed.

The aerial radiological survey for the Cameron area covered approximately 166.72 square miles and included the location of the Site. The aerial radiological survey results for the area within a 0.25 mile radius of the Site indicated a gross exposure rate range of 6 µR/hr to 7 µR/hr and no excess bismuth (i.e., bismuth activity greater than approximately 3.5 µR/hr) (*2007 AUM Atlas*). The aerial radiological survey results for the Cameron area indicated a gross exposure rate range of 2.43 µR/hr to 66.66 µR/hr and excess bismuth (i.e., bismuth activity greater than approximately 3.5 µR/hr) present in approximately 4.11 square miles of the 166.72 square miles of the Cameron flight area (Hendricks, 2001).

2.1.4.4 2011 Site Screening

In 2011, Weston performed site screening on behalf of the USEPA (Weston, 2011). The screening included: (1) recording site observations (i.e., number of homes, water sources, and sensitive environments[4] around the Site); (2) recording the type, number, and reclamation status of mine features; and (3) performing a surface gamma survey. Weston reported the Site was reclaimed

[4] Weston defined sensitive environments as "all sensitive environments located within visible range of the mine site, including: wetlands, endangered species, habitats and approximate locations of sites that may be under protection of the government of the Navajo Nation"

and it observed one round waste pile that was 25 ft in diameter and 1 ft high located along the northwest claim boundary. Weston also reported five structures (one Hogan, one small mud structure, one garage, one cooking area, and one outhouse) within 0.25 miles of the Site, no water features within a one-mile radius of the Site, and no sensitive environments were identified. Based on Weston's performance of a surface gamma survey, Weston determined that the highest gamma measurements were greater than 18 times the site-specific background level used for its gamma screening. Weston also observed a petrified log near one of the structures that had gamma measurements greater than 17 time the site-specific background level.

2.2 PHYSICAL CHARACTERISTICS

2.2.1 Regional and Site Physiography

The Site is located within the Colorado Plateau physiographic province, which is an area of approximately 240,000 square miles in the Four Corners region of Utah, Colorado, Arizona, and New Mexico. Figure 2-3 presents a current regional aerial photograph (BING® Maps, 2018) of the Site within a portion of the Colorado Plateau. The Colorado Plateau is typically high desert with scattered forests and varying topography having incised drainages, canyons, cliffs, buttes, arroyos, and other features consistent with a regionally uplifted, high-elevation, semi-arid plateau (Encyclopedia Britannica, 2017). The physiographic province landscape includes mountains, hills, mesas, foothills, irregular plains, alkaline basins, some sand dunes, and wetlands. This physiographic province is a large transitional area between the semi-arid grasslands to the east, the drier shrub-lands and woodlands to the north, and the lower, hotter, less-vegetated areas to the west and south.

The Colorado Plateau includes the area drained by the Colorado River and its tributaries: the Green, San Juan, and Little Colorado Rivers (Kiver and Harris, 1999). The physiographic province is composed of six sections: Uinta Basin, High Plateaus, Grand Canyon, Canyon Lands, Navajo, and Datil-Mogollon. The Site is located within the Navajo section.

Figure 2-4 presents the regional USGS topographic map in the vicinity of the Site and shows site topography within a portion of the Colorado Plateau. The Site is located on relatively flat ground and adjacent to Tanner Wash, as shown in Figure 2-5. The elevation on-site is approximately 4,180 ft above mean sea level (amsl) (refer to Figure 2-4).

2.2.2 Geologic Conditions

2.2.2.1 Regional Geology

Regionally the Site is located within the Colorado Plateau, which is a massive outcrop of generally flat-lying sedimentary rocks ranging in age from the Paleozoic Era to the Cenozoic Era (USGS, 2017a). The plateau has very little regional structural deformation, compared with the mountainous basin-and-range region to the west, and the sedimentary beds range widely in thickness from less than one inch to hundreds of feet. Changes in paleoclimate and elevation produced alternating occurrences of deserts, streams, lakes, and shallow inland seas; and these

changes contributed to the type of rock deposited in the region. The rock units of the plateau consist of shallow submarine or sub-aerially deposited rocks including sandstone, shale, limestone, mudstone, siltstone, and various other sedimentary rock subtypes.

The Site is located within the Triassic Chinle Formation, which is composed of various rocks of lacustrine and fluvial continental origin, including claystone, sandstone, limestone, siltstone, and conglomerate (USAEC, 1972). Figure 2-6 depicts a regional geology map showing the Site in relation to the regional extent of the Chinle Formation. The Chinle Formation extends over the majority of the Colorado Plateau. In the southern portion of the Colorado Plateau, where the Site is located, the Chinle Formation ranges in thickness from a thin wedge to greater than 1,700 ft thick, but is generally greater than 1,000 ft thick (USAEC, 1972). In the Cenozoic Era, uplift and tilting of the plateau caused rapid down cutting of streams, forming many dramatic outcrops and incised streams characteristic of the region today.

2.2.2.2 Site Geology

Bedrock outcrops on-site consist of sandstone and siltstone with lesser amounts of conglomerate and shale of the Petrified Forest Member of the Triassic Chinle Formation, as shown in Figure 2-7. Fine-grained, weathered sandstone bedrock outcrops are located on the west side and in the central area of the Site (as shown in Figure 2-7 and Appendix B photograph number 1). Bedrock that does not outcrop on-site is overlain by 1 ft to 4 ft of unconsolidated deposits (refer to Section 3.3.2.2). The ore mined on-site consisted of fine-grained sandstone which filled elongate fluvial channels, of the Petrified Forest Member (Scarborough, 1981). The fine-grained sandstone contained petrified wood pieces and secondary uranium-vanadium minerals filled pore spaces within the sandstone and the petrified wood (Chenoweth, 1993). An alteration halo composed of bleached sandstone and mudstone also encased the majority of the ore (Chenoweth and Malan, 1973).

Unconsolidated deposits on-site (i.e., Quaternary deposits) are residual soils, eolian deposits, alluvium, and colluvium consisting of silt, sand, and gravel, as shown on the borehole logs in Appendix C.2. The eolian deposits also form sand dune features to the north of the Site, as shown in Figure 2-4. During the Site Characterization field activities, boreholes were advanced through the unconsolidated deposits using either a 3-inch diameter hand auger or a Geoprobe™ 8140LC rotary sonic drilling rig (refer to Section 3.3.2.2 and the borehole logs in Appendix C.2). The unconsolidated deposits ranged in depth from 0.25 ft to 4.0 ft bgs at borehole locations.

Two cross-sections for the Site, as shown in Figures 2-8a (west-east) and 2-8b (south-north), were produced using the subsurface borehole information collected during the Site Characterization activities (refer to Section 3.3.2.2). The two cross-sections show the extent and orientation of the consolidated and unconsolidated deposits in relation to the extent and orientation of the historical pit and the historical WP5 (refer to Section 2.1.4 and 2.2.7). The average depth to bedrock for the two cross-sectional areas is 2.5 ft bgs, and bedrock was measured between 3 ft to 4 ft bgs around the historical pit.

According to the US Department of Agriculture (USDA) Soil Survey for the Coconino County, Arizona, soils on-site that have not been disturbed are classified as shallow, well drained soils that formed in alluvial and eolian deposits derived dominantly from sandstone and sandy shale. (USDA, 1983).

2.2.3 Regional Climate

The Colorado Plateau is located in a zone of arid temperate climates characterized by periods of drought and irregular precipitation, relatively warm to hot growing seasons, and winters with sustained periods of freezing temperatures (National Park Service, 2017). The average monthly high temperature at weather station 0021169, CAMERON 1NNE in Cameron, Arizona (Western Regional Climate Center, 2017) located approximately 2.6 miles west of the Site, ranges between 47.6 degrees Fahrenheit (°F) in January to 97.4°F in July. Daily temperature extremes reach as high as 112°F in summer and as low as -9°F in winter. Cameron receives an average annual precipitation of 5.7 inches, with August being the wettest month, averaging 0.91 inches, and June being the driest month, averaging 0.12 inches.

Potential evaporation in the area is greater than the area's average annual precipitation. The potential evaporation noted at the Grand Canyon airport weather station, located approximately 45 miles west of the Site, averages 44 inches of pan evaporation annually (Western Regional Climate Center, 2017). Average wind speeds in the area are generally moderate, although relatively strong winds often accompany occasional frontal activity, especially during late winter and spring months. Blowing dust, soil erosion, and local sand-dune migration/formation are common during dry months. The Grand Canyon airport had the most complete record of wind conditions. A wind rose for Grand Canyon airport is presented on Figure 1-1. The wind rose was produced using data contained in the *2007 AUM Atlas* for the years 1996 to 2006. Predominant winds were from the south-southwest (refer to the wind rose on Figure 1-1).

2.2.4 Surface Water Hydrology

The Site is located within the Little Colorado River Valley Watershed, an area of approximately 27,000 square miles spanning Arizona and New Mexico, as shown in Figure 1-1. The Site is relatively flat, and is bordered to the north by Tanner Wash (refer to Figure 2-5 and Appendix B photograph number 2). Tanner Wash is the main drainage for the Site, is approximately 50 ft to 200 ft wide, and intersects the Little Colorado River 0.7 miles downstream from the Site, as shown in Figures 2-3 and 2-4. The drainage pattern for Tanner Wash is mostly dendritic and surface water runoff on-site drains either to Tanner Wash or terminates within the unconsolidated deposits. A second small drainage feature is also present on-site and runs along the eastern claim boundary, as shown in Figure 2-5. The approximate overland water flow direction on-site is to the southwest, as shown in Figure 2-5.

Adkins Consulting Inc. (Adkins), under contract to Stantec, performed a wildlife evaluation as part of the Site Clearance field investigations and did not identify any wetlands, seeps, springs, or riparian areas within the Site that would be attractive to wildlife (refer to Appendix E).

2.2.5 Vegetation and Wildlife

In the spring of 2016, biological surveys were conducted as part of Site Clearance activities. In April 2016, Adkins conducted a wildlife survey and in May 2016, Redente Ecological Consultants (Redente), under contract to Stantec, conducted a spring vegetation survey. Information about each survey is provided in Appendix E, which includes the Site biological evaluation reports and the *Navajo Nation Department of Fish and Wildlife* (NNDFW) *Biological Resources Compliance Form*. A summary of the survey activities and findings are provided in Section 3.2.2.3.

Vegetation communities found within the physiographic transitional area described in Section 2.2.1 include shrublands with big sagebrush, rabbitbrush, winterfat, shadscale saltbush, and greasewood; and grasslands of blue grama, western wheatgrass, green needlegrass, and needle-and-thread grass. Higher elevations may support pinyon pine and juniper woodlands. The vegetation communities on-site included sparsely vegetated grassland with sporadic shrubs (refer to Appendix E). During the surveys, Stantec and/or its subcontractors observed on-site wildlife including common raven, cottontail rabbit, coyote, mule deer, turkey vulture, and western scrub-jay (refer to Appendix E).

2.2.6 Cultural Resources

In April 2016, as part of Site Clearance activities, Dinétahdóó Cultural Resource Management (Dinétahdóó), under contract to Stantec, conducted a cultural resource survey, as well as ethnographic and historical data reviews, and interviewed local residents living near the Site (Dinétahdóó, 2016). The residents stated that the Boyd Tisi No. 2 Mine was an open pit mine that operated for less than six months. The residents also stated that mining operations were halted at the Boyd Tisi No. 2 Mine when it started to encroach onto the Juan Horse mine lease area (i.e. Juan Horse No. 3).

During the 2016 cultural resource survey Dinétahdóó identified two isolated occurrences. Appendix E includes a copy of the *Cultural Resource Compliance Form,* and findings of the cultural resource survey are summarized in Section 3.2.2.4.

2.2.7 Observations of Potential Mining and Reclamation

During RSE activities, Stantec field personnel (field personnel) observed the following features indicative of potential mining or reclamation activities at the Site: a potential haul road and two reclaimed areas located on-site. Details regarding these observations are presented in Section 3.2.2.1. These observations were used, along with additional lines of evidence (refer to Section 3.3.3), to identify areas at the Site where TENORM was present (refer to Section 4.6).

3.0 SUMMARY OF SITE INVESTIGATION ACTIVITIES

3.1 INTRODUCTION

This section summarizes Site Clearance and other RSE activities conducted between October 2015 and March 2017. Site Clearance activities were conducted initially to obtain information necessary to develop the *RSE Work Plan*. Site Clearance activities were performed in accordance with the approved *Site Clearance Work Plan.* Resulting RSE activities were performed in accordance with the approved *RSE Work Plan.*

The primary objectives of the RSEs are to provide data required to evaluate relevant site conditions and to support future removal action evaluations at the Sites. It is not intended to establish cleanup levels or determine cleanup options or potential remedies.

The *RSE Work Plan* is comprised of a Field Sampling Plan (FSP), Quality Assurance Project Plan (QAPP), Health and Safety Plan (HASP), and a Data Management Plan (DMP). The FSP guided the fieldwork by defining sampling and data-gathering methods. The QAPP presented quality assurance/quality control (QA/QC) requirements designed to meet Data Quality Objectives (DQOs) for the environmental sampling activities. The HASP listed site hazards, safety procedures and emergency protocols. The DMP described the plan for the generation, management, and distribution of project data deliverables. The FSP, QAPP, HASP, and DMP provided the approved requirements and protocols to be followed for the RSE data collection, data management, and data analyses performed to develop this RSE report. Any deviations or modifications from the *RSE Work Plan* are described in the appropriate RSE report sections.

The RSE process followed applicable aspects of the USEPA DQO Process and *MARSSIM*, to verify that data collected during the RSE activities would be adequate to support reliable decision-making (USEPA, 2006). The USEPA DQO Process is a series of planning steps based on the scientific method for establishing criteria for data quality and developing survey designs. *MARSSIM* provides technical guidance on conducting radiation surveys and site investigations.

The USEPA DQO Process is a seven-step process[5] that was performed as part of the *RSE Work Plan* to identify RSE data objectives. The goal of the USEPA DQO Process is to minimize expenditures related to data collection by eliminating unnecessary, duplicate, or overly precise data and verifies that the type, quantity, and quality of environmental data used in decision making will be appropriate for the intended application. It provides a systematic procedure for defining the criteria that the survey design should satisfy. This approach provides a more effective survey design combined with a basis for judging the usability of the data collected (USEPA, 2006).

[5] (1) State the problem; (2) Identify the goals of the study; (3) Identify the information inputs; (4) Define the boundaries of the study; (5) Develop the analytical approach; (6) Specify the tolerance on decision errors; and (7) Optimize sampling design (USEPA, 2006).

The USEPA DQO Process performed for the RSE is presented in the *RSE Work Plan*, Section 3, and identifies the purpose of the data collected as follows:

1. Background reference area soil sampling, laboratory analyses, surface gamma surveying, and subsurface static gamma measurements to establish background analyte concentrations and gamma measurements, which will be used as the ILs, for the Site.

2. Site sampling (soil and sediment), laboratory analyses, surface gamma surveying, and subsurface static gamma measurements for comparison with ILs, to define the lateral and vertical extent of contamination at the Site to characterize the Site to support future Removal or Remedial Action evaluations.

The USEPA DQO Process was used in conjunction with *MARSSIM* guidance for RSE planning and data collection. Per *MARSSIM* guidance, "planning radiation surveys, using the USEPA DQO Process, can improve radiation survey effectiveness and efficiency, and thereby the defensibility of decisions" (USEPA, 2000).

The applicable aspects of *MARSSIM* incorporated into the RSE process include:

- Historical site assessment
- Determining RSE DQOs
- Selecting background reference areas
- Selecting radiation survey techniques
- Site preparation
- Quality control
- Health and safety
- Survey planning and design
- Baseline surface gamma surveys and subsurface static gamma measurements
- Field measurement methods and instrumentation
- Media sampling and preparation for laboratory analyses

The RSE process also used applicable aspects of *MARSSIM* for interpretation of the RSE results, including:

- Data quality assessment through statistical analyses
- Evaluation of the analytical results
- Quality assurance and quality control

Sections 3.2 and 3.3 summarize the preparation, field investigation methods, and procedures for data collection during the Site Clearance activities and other RSE activities. Activities subsequent to the Site Clearance are described in detail in the *RSE Work Plan,* Section 4. Appendix A includes the radiological characterization report prepared by Environmental Restoration Group, Inc. (ERG), under contract to Stantec. Appendix B includes photographs of features at the Site and the surrounding area, Appendix C.1 includes soil/sediment sample field forms and Appendix C.2 includes borehole logs.

3.2 SUMMARY OF SITE CLEARANCE ACTIVITIES

The Site Clearance activities consisted of two tasks: a desktop study and field investigations. The desktop study was completed prior to field investigations, and the findings of the desktop study were used to guide field investigations. The Site Clearance activities are detailed in the *Site Clearance Data Report* and are described below.

3.2.1 Desktop Study

The desktop study included:

- Review of historical aerial photographs (USGS, 2017b). Photographs were selected based on sufficient scale, quality, resolution, and whether the photograph met one or more of the following criteria:
    - Showed evidence of active mining or grading of the Site, or provided information on how the Site was developed or operated (e.g., haul roads and open pits).
    - Showed evidence of reclamation (e.g., soil covers).
    - Showed significant changes in ground cover compared to current photographs.
- Review of current aerial photographs for identification of buildings, homes and other structures, and potential haul roads within 0.25 miles of the Site.
- Review of topographic and geologic maps.
- Review of information related to surface water features and water wells on the Navajo Nation within a one-mile radius of the Site, provided by: (1) the Navajo Nation Department of Water Resources (NNDWR, 2016); and (2) ESRI Shapefiles data contained in the *2007 AUM Atlas*.
- Review of previous studies, information related to potential past mining, and reclamation activities.
- Identification of the predominant wind direction in the region of the Site.

Based on the list above, the following findings were identified during the desktop study:

- Historical photographs (USGS, 2017b) for the Site were selected from 1952, 1954, 1979, 1982, 1992, 1997, and 2005 for comparison against a current image (BING®, 2018). The USEPA provided the 1982 photograph and all other historical photographs were obtained from the USGS (2017b). The selected historical photographs are shown in Figure 3-1a. Comparison of the historical photographs to the current photograph showed evidence of historical mining (i.e., the historical mining pit and waste or stock piles) occurring on the Site sometime after 1954 and that reclamation activities occurred after 1992. Figure 3-1b compares the aerial photograph from 1982 and the current image. The 1982 historical photograph is presented because it provides the best resolution of the Site prior to reclamation activities occurring. The historical pit and waste- or stock piles at the Site along with surface disturbance at the adjacent Juan Horse No. 3 claim are also shown on Figure 3-1b.

- The current aerial photograph review confirmed that two home-sites and several out-buildings were located within 0.25 miles of the Site, as shown in Figure 2-1. Dirt roads were identified within 0.25 miles of the Site, refer to Figures 2-1 and 2-5. The road type (i.e., potential haul road or road unrelated to historical mining) was identified by the current aerial photograph review, historical document review, and visual identification during the Site Clearance field investigations (refer to Section 3.2.2.1).

- Five potential water features were identified based on the review of information provided by the NNDWR and the *2007 AUM Atlas*, refer to Table 3-1 and Figure 2-1.

- The predominant regional winds were from the south-southwest (refer to Section 2.2.3 and Figure 1-1).

Previous studies and information related to past mining/reclamation are discussed in Sections 2.1.1 and 2.1.4.

3.2.2 Field Investigations

3.2.2.1 Site Mapping

The *Site Clearance Work Plan* specified that the following features at and near the Site, if present, should be mapped, marked, and/or their presence confirmed:

- Claim boundaries and the 100-ft buffers of the claim boundaries

- Roads, fences/gates, utilities: haul roads to a distance of 0.25 miles or to the intersection with the next major road, whichever is closer

- Structures, homes, buildings, livestock pens, etc.

- Surface water and water well locations: surface water channels that drain the Site to a distance of 0.25 miles away from the Site or to the confluence with a major drainage, whichever is closer; surface water features and water wells identified within a one-mile radius of the Site

- Topographic features
- Potential background reference areas
- Type of ground cover, including rock, soil, waste rock, etc.
- Physical hazards

Based on the list above, the following site features were mapped during field investigations:

- Claim boundaries – 100-ft buffers of the claim boundaries, as shown in Figure 2-5, were marked in the field with stakes and/or flagging and mapped with a global positioning system (GPS).
- Topographic features – The mapped area was located on relatively flat ground, as shown in Appendix B photograph numbers 1, 2, and 8.
- Reclaimed areas – Two reclaimed areas were mapped, as shown in Figure 2-5. The central reclaimed area was coincident with the historical pit and the western reclaimed area was coincident with historical WP5, as shown in Figure 2-2. The central reclaimed area was approximately 350 ft wide and 280 ft long; however, it was difficult for field personnel to identify the exact extent of the area due to the shallow slope and surface erosion that had occurred on the reclaimed area. The western reclaimed area was approximately 190 ft wide and 140 ft long, and field personnel observed petrified wood and cobble-sized pieces of potential waste rock (radioactive point sources) in this area. The central reclaimed area is shown in Appendix B photograph number 7 and the western reclaimed area is shown in photograph 3. The reclaimed areas are also shown as earthworks in Figure 2-7.
- Potential haul road – a potential haul road was mapped, as shown in Figure 2-5. The potential haul road ran from the home-sites to the central reclaimed area.
- Fences – a partially fenced area was mapped, as shown in Figure 2-5. The fenced area was located near the western reclaimed area.
- Drainages – Two drainages were mapped on-site, as shown in Figure 2-5. The main drainage for the Site was Tanner Wash, located to the north of the Site. A second small drainage feature was located east and south of the central reclaimed area. Tanner Wash is shown in Appendix B photograph number 2.
- Berm - An earthen berm was mapped, as shown in Figure 2-5 and Appendix B photograph numbers 5 and 6. The berm was located southwest of the Site and field personnel assumed the berm was used to divert surface water flow, primarily originating from the Juan Horse No. 3 site, around the existing home-sites.
- Debris pile – A debris pile was mapped, as shown in Figure 2-5. The debris pile was partially buried in sand and contained metal cans, plastic bottles, gloves, and other non-identifiable debris, as shown in Appendix B photograph number 4. The Trust determined that the debris pile was not related to historical mining activities because much of the co-mingled debris was plastic, which post-dates the mining activities that occurred on-site.

- Roads – Roads were mapped, as shown in Figure 2-5. The roads connect the home-sites to Indian Route 6730.

- Water feature – Field personnel assessed the five water features identified from the desktop study, as shown in Figure 2-1. The water features and field personnel observations are included in Table 3-1. In addition, during site mapping activities field personnel mapped one unmarked well, as shown in Figure 2-1. Field personnel observed the well located 0.7 miles north of the Site while they were looking for the five identified desktop water features (refer to Section 3.2.1). For tracking purposes, Stantec labeled the well as S135-Well-1. Field personnel inspected the well and found it locked and located on a different AUM site (#134), as shown in Figure 2-1 and described in Table 3-1.

- Structures – Two home-sites and several out-buildings were mapped within 0.25 miles of the Site, as shown in Figure 2-1.

- Ground cover – Ground cover and vegetation observed on-site are shown in Appendix B photograph number 8 and are discussed in Sections 2.2.2.2 and 2.2.5, respectively.

Field personnel did not observe evidence of historical waste piles WP1 through WP4 (refer to Section 2.1.4 and Figure 2-2) or the waste pile identified by Weston (refer to Section 2.1.4).

In June 2018, the USEPA provided the Trust with a copy of a NNDWR database that was generated in 2018. The USEPA stated that there were discrepancies between the NNDWR water feature locations in the 2018 database and those provided in the 2016 NNDWR database used by the Trust. This information was provided after Site Characterization activities had occurred and was therefore not included in the RSE for the Site. Comparison of the 2018 NNDWR database against the 2016 NNDWR database and the *2007 AUM Atlas* will require additional field work and it is recommended that this be addressed in future studies for the Site.

3.2.2.2 Potential Background Reference Area Evaluation

The desktop study findings and field investigation observations were used to identify five potential background reference areas (BG-1 through BG-5) for the Site, as shown in Figure 3-2 and described in Appendix D.1. BG-3 was selected as a suitable background reference area for the Site for the following reasons:

- BG-3 encompassed an area of 521 ft^2 (approximately 0.01 acres), was located 490 ft north of the Site, and was crosswind and hydrologically cross-gradient from the Site. Geologically, BG-3 represented topographically elevated areas near the center of the Site characterized by highly weathered bedrock outcrops of the Chinle Formation and thin unconsolidated deposits consisting of Holocene to Pleistocene sand mixed with residual soil. The vegetation and ground cover at BG-3 were similar to the central portions of the Site.

BG-1, BG-2, BG-4, and BG-5 were not selected as background reference areas for the Site for the reasons described in Appendix D.1.

The potential background reference area was selected based on *MARSSIM* guidance (i.e., similar geology and ground conditions, distance from the Site, etc.) to:

1. Represent undisturbed conditions at the Site (e.g., pre-mining conditions)

2. Provide a basis for establishing the ILs

The approved *RSE Work Plan* did not specify any minimum or maximum size criteria for these areas. Stantec does not view the size of the selected background reference area as affecting the validity of the background concentrations. The size was based on professional judgment that the selected area was generally representative of the Site.

The background reference area was selected in an area outside of the Site that was considered to be representative of the general conditions observed at the Site. However, an important consideration is that the background gamma radiation and metals concentrations within soil and bedrock can be variable and often contain a wider range of concentrations than what was measured at the selected background reference area. The ILs derived from the background reference area provide a useful reference for comparison to the Site. However, it will be important to consider the variations in concentrations when conducting additional site assessment work and/or to support future Removal or Remedial Action evaluations at the Site.

3.2.2.3 Biological Surveys

The objective of the biological surveys was to determine if identified species of concern or potential federal or Navajo Nation Threatened and Endangered (T&E) species and/or critical habitat are present on or near the Site. Biological (vegetation and wildlife) clearance was required at the Site before RSE activities could begin, to determine if the RSE activities could affect potential species of concern or federal or Navajo Nation listed T&E species and/or critical habitat. The Site biological evaluation reports, the *NNDFW Biological Resources Compliance Form*, and the US Fish and Wildlife Service (USFWS) consultation email are provided in Appendix E.

The Federal Endangered Species Act (ESA) of 1973, 16 U.S.C. §1531 et seq., requires that each Federal agency confer with the USFWS on any agency action that is likely to jeopardize the continued existence of any proposed T&E species or result in the destruction or adverse modification of critical habitat proposed to be designated for such species 16 U.S.C. §1536(a)(4). An "action area", as defined in the regulations implementing the ESA, includes "all areas to be affected directly or indirectly by the Federal action and not merely the immediate area involved in the action". 50 C.F.R §402.2.

The vegetation and wildlife surveys were conducted according to guidelines of the ESA and the NNDFW-Navajo Natural Heritage Program (NNHP), including the procedures set forth in the Biological Resource Land Use Clearance Policies and Procedures, RCS-44-08 (NNDFW, 2008), the Species Accounts document (NNHP, 2008), and the USFWS survey protocols and recommendations (USFWS, 1996).

Based on the results of the vegetation and wildlife surveys, the NNDFW's opinion was that the RSE Baseline Studies and Site Characterization Activities,

> "with applicable conditions, [were] in compliance with Tribal and Federal laws protecting biological resources including the Navajo Endangered Species and Environmental Policy Codes, US Endangered Species, Migratory Bird Treaty, Eagle Protection and National Environmental Policy Acts".

A copy of the *NNDFW Biological Resources Compliance Form* is included in Appendix E. In addition, after the Trust submitted the results of the biological survey, USEPA consulted with John Nystedt of the USFWS on August 26, 2016, and received an email response on August 29, 2016 stating:

> "Based on the information you [Stantec] provided [i.e., there is no habitat for any Federally listed species in the action area], we [the USFWS] believe no endangered or threatened species or critical habitat will be affected by the project; nor is this project likely to jeopardize the continued existence of any proposed species or adversely modify any proposed critical habitat" (Nystedt, 2016).

A copy of the Nystedt email is included in Appendix E. In light of the results of the biological surveys described below, the USFWS recommended no further action from the USFWS for the project unless the project or regulations change, or a new species is listed.

Vegetation Survey - In May 2016, Redente performed a spring vegetation survey as part of the Site Clearance field investigations. Complete details of the vegetation survey, including the *NNDFW Biological Resources Compliance Form*, are included in Appendix E and summarized below.

In preparation for the vegetation survey, Redente submitted data requests for species of concern to the NNDFW and NNHP, and for Federal T&E species, to the USFWS. The NNDFW-NNHP responded to MWH (now Stantec)by letter dated November 19, 2015. The letter provided a list of species of concern known to occur within the proximity of the Site and included their status as either Navajo Nation Endangered Species List (NNESL), and/or Federally Endangered, Federally Threatened, or Federal Candidate. The NNESL species were further classified as G2, G3, or G4[6]. A copy of this letter is included in Appendix E. A summer vegetation survey was not required for the Site because the species of concern data provided by NNDFW-NNHP did not include listed potential plant species that require a summer survey.

The NNDFW listed three T&E plant species that may occur on-site; beath milkvetch (G4), round dune-broom (G3), and peebles blue star (G4). The USFWS listed one T&E plant species that may occur on-site: Fickeisen plains cactus. Beath milkvetch is a native perennial legume with a general distribution in Coconino County. It inhabits sandy flats, red clay knolls, and gullied washes especially on selenium bearing soils at elevations ranging from 4,003 ft to 4,790 ft amsl.

[6] G2 classification includes endangered species or subspecies whose prospect of survival or recruitment are in jeopardy, G3 classification includes endangered species or subspecies whose prospect of survival or recruitment are likely to be in jeopardy in the foreseeable future, and G4 classification are "candidates" and includes those species or subspecies which may be endangered but for which sufficient information is lacking to support being listed (refer to Appendix E).

Round dune-broom is a native low growing shrub that occurs in Coconino and Navajo Counties and inhabits outcrop areas ranging from sandy and gravelly soils to alluvial cinders in sandstone breaks at elevations ranging from 4,593 ft to 5,184 ft amsl. Peebles blue star is a native perennial forb found in Coconino, Navajo, and Apache Counties growing in plains, grasslands, and in Great Basin desert shrub communities in soils that are alkaline and coarse textured at elevations ranging from 4,003 ft to 5,627 ft amsl. Fickeisen plains cactus is a small, one- to two-inch-tall, pincushion cactus that occurs in northern Arizona, specifically in Coconino and Mohave Counties growing in gravelly-limestone soils in desert shrub communities at elevations ranging from 4,298 ft to 5,446 ft amsl.

Before beginning the Site vegetation survey, Redente reviewed the ecologic and taxonomic information for the T&E species to understand ecological characteristics of the species, habitat requirements, and key taxonomic indicators for proper identification (Arizona Native Plant Society, 2000). Redente also reviewed currently accepted resource agency protocols and guidelines for conducting and reporting botanical inventories for special status plant species (USFWS, 1996). An experienced Redente botanist with local flora knowledge conducted the rare plant survey. The botanist walked transect lines on the Site with emphasis on areas with suitable habitat for the T&E species, specifically clay knolls, gullied washes, calcareous outcrops, sandstone breaks, and volcanic cinders.

The Redente botanist did not identify any of the four T&E species at the Site, based on observations he made during the on-site survey, even though habitat at the Site may be suitable for beath milkvetch, round dune-broom, and peebles blue star. Observed vegetation communities on-site were sparsely vegetated grassland with sporadic shrubs.

Wildlife Survey - In April 2016, Adkins performed a wildlife evaluation survey as part of the Site Clearance field investigations. The completed wildlife survey, including the *NNDFW Biological Resources Compliance Form*, are included in Appendix E and are summarized below.

Adkins performed the survey under a permit issued by NNDFW for the purpose of assessing habitat potential for ESA-listed or NNESL animal species. Adkins biologists with experience identifying local wildlife species led the field survey, which consisted of walking transects 10 ft apart throughout the Site, including a 100-ft buffer beyond the claim boundary. The surrounding areas were visually inspected with binoculars for nests, raptors, or signs of raptor use.

The wildlife evaluation was performed for species listed as NNESL, Federally Endangered, Federally Threatened, or Federal Candidate, and species protected under the Migratory Bird Treaty Act (MBTA) that have the potential to occur on-site. Prior to the start of the wildlife survey, Adkins submitted data requests to USFWS and NNDFW for animal species listed under the ESA. The NNESL species were further classified as G2, G3, or G4. The USFWS included five ESA-species with the potential to occur in the area of the Site; two birds (California condor, yellow-billed cuckoo), one fish (roundtail chub), one mammal (black-footed ferret), and one reptile (northern Mexican garter snake). The NNDFW included: one amphibian (northern leopard frog [G2]), four birds (southwestern willow flycatcher [G2], American peregrine falcon [G4], golden eagle [G3], ferruginous hawk [G3]), and one mammal (Wupatki pocket mouse [G4]). All species on the

USFWS list and three species from the NNDFW list were eliminated from further evaluation because there was no potential for those species to occur on the Site due to lack of suitable habitat. Based on the preparation data, two birds and one mammal remained as species of concern warranting further analysis during the survey: golden eagle, ferruginous hawk, and Wupatki pocket mouse.

In addition, Adkins reviewed species protected under the MBTA that have the potential to occur in the area of the Site. The MBTA review resulted in the potential for identification of 17 bird species in addition to those listed above, known as "Priority Birds of Conservation Concern with the Potential to Occur"[7] in the areas of the Site: black-throated sparrow, Brewer's sparrow, gray vireo, loggerhead shrike, mountain bluebird, mourning dove, sage sparrow, sage thrasher, scaled quail, Swainson's hawk, vesper sparrow, bald eagle, Bendire's thrasher, pinyon jay, prairie falcon, mountain plover, and western burrowing owl. These 17 MBTA bird species were added for further analysis during the survey for effects to potential habitat.

The wildlife survey revealed three NNESL species of concern that have the potential to occur within or near the Site based on habitat suitability or actual recorded observation: golden eagle, ferruginous hawk, and Wupatki pocket mouse. Based on these findings Adkins recommended the use of best management practices to protect potential habitat during RSE activities, specifically: (1) confining equipment travel to within the boundaries of the Site; (2) minimizing travel corridors as much as possible; (3) limiting truck and equipment travel within the Site when surfaces are wet and soil may become deeply rutted; and (4) using previously disturbed areas for travel when possible. The recommended best management practices were followed to protect potential habitat during RSE activities.

3.2.2.4 Cultural Resource Survey

In April 2016, Dinétahdóó conducted a cultural resource survey as part of the Site Clearance field investigations. Navajo Nation Historic Preservation Department (NNHPD) issued a Class B permit to Dinétahdóó on behalf of the Trustto conduct the cultural resource survey. Following the cultural resource survey, the NNHPD issued a Cultural Resources Compliance Form that included a "Notification to Proceed" with RSE field work. A copy of the Cultural Resources Compliance Form is included in Appendix E. According to NNHPD, this form is the equivalent of a "permit" to conduct the work (NNHPD, 2018[8]).

The survey included the areas within the claim boundary and the 100-ft claim boundary buffer, as shown in Figure 2-5. The survey identified two isolated occurrences. For confidentiality reasons, details regarding the isolated occurrences are not provided herein. NNHPD can be contacted for additional information. NNHPD contact information is located on the *Cultural Resource Compliance Form* included in Appendix E.

[7] USFWS, 2008. Birds of Conservation Concern 2008. United States Department of Interior, Fish and Wildlife Service, Division of Migratory Bird Management, Arlington, Virginia. 85 pp.
[8] Call with Sadie Hoskie, Tamara Billie of NNHPD, and Linda Reeves, June 8, 2018.

Based on the survey findings, Dinétahdóó recommended archaeological clearance for the area it surveyed with the stipulation that RSE activities be halted at any time if cultural resources were encountered. Stantec complied with Dinétahdóó's recommendations while conducting RSE activities on–site.

Dinétahdóó also escorted field personnel during the collection of a subsurface soil sample at the background reference area (refer to Section 3.3.1.1). The Trust and NNHPD agreed that Dinétahdóó's archeologist would be present because the subsurface sample location was outside of the area originally surveyed during the Site Clearance cultural resource survey.

3.3 SUMMARY OF REMOVAL SITE EVALUATION ACTIVITIES

The RSE activities consisted of two additional tasks following the Site Clearance Activities: Baseline Studies and Site Characterization activities. The Baseline Studies included a Background Reference Area Study, Site gamma survey, and Gamma Correlation Study. The results of the Baseline Studies were used to plan and prepare the Site Characterization field investigations, which included surface soil and sediment sampling, and subsurface soil sampling. Results of the RSE activities are presented in Section 4.0. Baseline Studies and Site Characterization activities are summarized in Sections 3.3.1 and 3.3.2, respectively.

3.3.1 Baseline Studies Activities

3.3.1.1 Background Reference Area Study

The Background Reference Area Study activities were completed at the background reference area selected for the Site (BG-3). Refer to Section 3.2.2.2 for an explanation of the selection of the background reference area for the Site. BG-3 was selected as the background reference area after the initial Baseline Studies field work (refer to Appendix D.1). However, selection of the background reference area was considered a Baseline Studies task, regardless of when it was conducted. The Background Reference Area Study included a surface gamma survey, static surface and subsurface gamma measurements, surface soil sampling, and subsurface soil sampling. The soil sample locations in the background reference areas were initially selected using a triangular grid, set on a random origin. Where possible, samples were collected at the center points of the triangles. However, in some instances, the actual sample locations had to be moved in the field if sampling was not possible (e.g., the location consisted of exposed bedrock or there was a large bush blocking access). In these cases, the closest accessible location was selected instead.

The background reference area was selected based on a variety of factors, including *MARSSIM* criteria, which indicated whether the area was representative of unmined locations, regardless of the size of the area. These factors are described in this RSE report and accompanying appendices. The objectives of the background reference area study were to measure gamma radiation levels emitted by naturally occurring, undisturbed uranium-series radionuclides, and concentrations of other naturally occurring constituents. The results were used to establish background gamma levels and concentrations of Ra-226 and specific metals (uranium, arsenic,

molybdenum, selenium, and vanadium). The soil sampling locations at the background reference area are presented in Figure 3-3. Field personnel performed the Background Reference Area Study in accordance with the *RSE Work Plan,* Sections 4.2, 4.4, and 4.5.

The surface gamma survey at BG-3 was completed in March 2017. ERG performed the surface gamma survey using Ludlum Model 44-10 2-inch by 2-inch sodium iodide (NaI) high-energy gamma detectors (the detectors). Each detector was coupled to a Ludlum Model 2221 ratemeter/scaler that in turn was coupled to a Trimble ProXRT GPS unit with a NOMAD 900 series datalogger. The detector tagged individual gamma measurements with associated geopositions recorded using the Universal Transverse Mercator Zone 12 North coordinate system. ERG matched and calibrated the detector to a National Institute of Standards and Technology-traceable cesium-137 check source, and function-checked the equipment prior-to and after each workday. ERG performed the survey by walking the background reference area with the detector carried by hand, along transects that varied depending on encountered topography. The gamma measurements were collected with the height of the detector varying from 1ft to 2 ft above ground surface (ags) with an average height of 1.5 ft ags to accommodate vegetation, rocks, or other surface features. If field personnel encountered an immovable obstruction (e.g., a tree) during the surface gamma survey they went around the obstruction. Subsequent to each workday, ERG downloaded the gamma measurements to a computer and secure server.

The same equipment used for the surface gamma survey was also used to collect static one-minute gamma measurements at the ground surface and down-hole (subsurface) at borehole location S135-BG3-011. Refer to Appendix C.2 for borehole logs. Static gamma measurements were categorized as surface measurements where they were collected at ground surface (0.0 ft) and as subsurface measurements where depths were below ground surface due to the influence of downhole geometric effects on subsurface static gamma measurements (refer to Section 4.1). Gamma measurements were collected according to the methods described in the *RSE Work Plan,* Section 4.2 and Appendix E.

Soil samples collected as part of the background study are detailed in Table 3-2 and sample locations are shown in Figure 3-3. Soil samples were categorized as surface samples where sample depths ranged from 0.0 to 0.5 ft bgs and as subsurface samples where sample depths were greater than 0.5 ft bgs. Field personnel collected the following samples, in March 2017, from the background reference area:

- BG-3 – Eleven surface grab samples were collected from 11 locations and one subsurface grab sample from borehole location S135-BG3-011. The samples consisted of highly weathered bedrock / unconsolidated deposits consisting of sand mixed with residual soil.

Samples were shipped to a USEPA approved laboratory, ALS Environmental Laboratories in Fort Collins, Colorado for analyses. Samples were collected according to the methods described in the *RSE Work Plan,* Section 3.8.1.1. The results of the surface gamma survey, static surface and subsurface gamma measurements, and surface and subsurface soil sample analytical results provided background reference data to guide the Site Characterization surface and subsurface

soil/sediment sampling (refer to Section 3.3.2). The Background Reference Area Study results are presented in Section 4.1. The ERG survey report in Appendix A provides further details on the gamma surveys. Field forms, including borehole logs, are provided in Appendix C.1 and C.2.

3.3.1.2 Site Gamma Radiation Surveys

Baseline Studies activities included a surface gamma survey of the Site in accordance with the *RSE Work Plan,* Section 4.2 and Appendix E. The approximate centerline of the potential haul road was not surveyed, but the shoulders were; and the shoulders of the roads that run from Indian Route 6730 to the two home-sites were not surveyed, but the approximate centerlines were. These oversights were due to miscommunication with field personnel and are identified as potential data gaps in Section 4.8.

The surface gamma survey was used to evaluate the extent of potential mining-related impacts or areas containing elevated radionuclides associated with uranium mineralization. In addition, surface soil and sediment samples and subsurface soil samples were also collected and used to evaluate mining-related impacts (refer to Section 3.3.2).

In October 2016, the surface gamma survey was performed using the same methods and equipment, as described in Section 3.3.1.1. The surface gamma survey included the claim area, a 100-ft buffer around the claim area, and roads and drainages out to approximately 0.25 miles from the Site. The *RSE Work Plan* specified that the surface gamma survey would be an iterative process where the surface gamma survey would be extended laterally until gamma measurements appeared to be within background levels. Subsequent to each workday, the gamma measurements were evaluated by ERG and Stantec, and compared to the background reference areas to determine if additional surface gamma surveying was needed.

The full areal extent of the surface gamma survey was 21.2 acres and is referred to as the Survey Area, as shown in Figure 3-4. The surface gamma survey results are presented in Section 4.2. The ERG survey report in Appendix A provides further detailed information on the surface gamma survey.

3.3.1.3 Gamma Correlation Study

Baseline Studies activities included a Gamma Correlation Study in accordance with the *RSE Work Plan,* Section 4.3. The objectives of the Gamma Correlation Study were to determine correlations between the following constituents to use as screening tools for site assessments:

- Gamma measurements (in cpm) and concentrations of Ra-226 in surface soils (in picocuries per gram [pCi/g])
- Gamma measurements (in cpm) and exposure rates (in microRoentgens per hour [µR/hr])

Two regression analyses were conducted for these correlations. The first regression analysis was performed using co-located high-density surface gamma measurements and laboratory concentrations of Ra-226 in surface soil/sediment to develop a correlation equation (refer to

Section 4.2.2). The correlation equation allows for Ra-226 concentrations in soil and sediment to be estimated (predicted) based on gamma measurements in the field.

This correlation equation was not used in the field to estimate Ra-226 concentrations or to evaluate the extent of Ra-226 concentrations. The correlation was used to develop a site-specific prediction for Ra-226 concentrations from the actual gamma survey data, as presented in Section 4.2.2. The correlation can be used as a site-specific field screening tool during site assessments, using the same gamma survey methods as in this RSE (e.g., walkover gamma survey) and based on site-specific conditions. The data related to the correlations are provided in Appendices A and C.

The second regression analysis was performed using co-located static one-minute gamma measurements and exposure rates to develop an exposure-rate correlation equation. Exposure rates can be predicted, based on gamma measurements, using the developed exposure-rate correlation equation. The exposure rate correlation also provides a standard by which future gamma measurements can be compared to previous gamma measurements, if those previous gamma measurements were also correlated with exposure. In addition, exposure rates can be used to provide an estimate of gamma radiation levels when an exposure meter is used as a health and safety tool for field personnel working on-site. The exposure rate correlation was not used for Site Characterization. Because the exposure rates are not part of the data analyses for the RSE report, a summary of the exposure rate correlation is not presented in this report. Appendix A provides a discussion of the correlations and the regression equations for both correlations.

In October 2016, field personnel identified five areas for the Gamma Correlation Study, as shown in Figure 3-5, by considering the results of the Site surface gamma survey (described in Section 3.3.1.2), field conditions (e.g., suitable terrain), and feasibility of sampling. To minimize variability when determining a correlation between gamma measurements (in cpm) and concentrations of Ra-226 in soil/sediment, the study area soil/sediment must: (1) represent a specific gamma measurement within the range of gamma measurements collected at the Survey Area; and (2) be as homogenous as possible with respect to soil/sediment type, and gamma measurement within the correlation area. At each area, field personnel completed a high-density surface gamma survey (intended to cover 100 percent of the survey area) and collected one five-point composite surface soil/sediment sample per area (refer to Table 3-2). Field personnel made a field modification from the *RSE Work Plan* by adjusting the size of the 900 ft^2 area smaller at three of the Gamma Correlation Study locations and larger at two of the Gamma Correlation Study locations, to minimize the variability of gamma measurements observed. The area used for the Gamma Correlation Study is shown in Figure 3-5, where the box shown at the five study locations represents a 900 ft^2 area in comparison to the actual area covered for the study, as shown by the extent of the gamma measurements within each area.

Field personnel collected, logged, classified, packaged, and shipped the samples in accordance with the *RSE Work Plan,* Sections 4.4, 4.9, 4.11, and Appendix E. Soil/sediment

samples were collected for analyses of Ra-226 and isotopic thorium, as described in the *RSE Work Plan,* Section 3.4.1.

The objectives of the thorium analyses were for site characterization and evaluation of potential effects of thorium on the correlation. The data can be used to assess the potential effects of thorium-232 (Th-232) series radioisotopes on the correlation of gamma measurements to concentrations of Ra-226 in surface soils (i.e., if gamma-emitting radioisotopes in the Th-232 series, such as actinium-228, lead-212, and thallium-208, are impacting gamma measurements at the Site), as discussed in Section 4.2.2. Uranium, radium, and thorium occur in three natural decay series (uranium-238 [U-238], Th-232, and U-235), each of which include significant gamma emitters (USEPA, 2007b). Therefore, in order to develop a correlation between gamma radiation and Ra-226 concentrations, the gamma radiation from each significant decay series present at the Site, may need to be considered. Typically, only U-238, and sometimes Th-232, are present in significant quantities. The contribution from the U-235 decay series to gamma measurements can be excluded because U-235 is only approximately 0.72 percent of the total uranium concentration. If the Th-232 decay series is present in significant quantities, it should be accounted for in the correlation to accurately predict Ra-226 concentrations based on all significant sources of gamma radiation.

3.3.1.4 Secular Equilibrium

The Gamma Correlation Study soil/sediment samples (refer to Section 3.3.1.3) were also analyzed for thorium-230 (Th-230), in accordance with the *RSE Work Plan,* Section 3.4.1. The activities of Th-230 and Ra-226 can be compared to evaluate the status of secular equilibrium within the U-238 decay series (USEPA, 2007b). The U-238 decay series is in secular equilibrium when the radioactivity of a parent radionuclide (e.g., U-238) is equal to its decay products (refer to Appendix A). If the U-238 decay series is out of secular equilibrium, the quantities of the daughter products become depleted. This could be considered for potential site assessments (e.g., when evaluating the contribution of the daughter products to the total risk related to U-238 during a human health and/or ecological risk assessment). As part of the RSE, the secular equilibrium evaluation was a general indicator (e.g., screening level assessment) of the status of equilibrium at the sites. It was not used to characterize the extent of constituents of potential concern (COPCs) at the Site. The secular equilibrium evaluation is discussed here only because Th-230 was included in the isotopic thorium analysis.

3.3.2 Site Characterization Activities and Assessment

3.3.2.1 Surface Soil and Sediment Sampling

Site Characterization activities included surface soil and sediment sampling and associated laboratory analyses. The soil/sediment surface sampling locations within the Survey Area were selected based on professional judgment (i.e., non-randomly) to evaluate concentrations of Ra-226 and metals in relation to the surface gamma survey measurements and site features (e.g., historical mining features and geologic features). Based on the surface gamma survey results and site features, a limited number of samples were collected and analyzed where the

gamma survey measurements were within background levels, mining and or exploration-related features were not present, and no ground disturbance was observed. The results were compared to the site-specific ILs and published regional concentrations to support the overall evaluation of potential mining impacts (refer to Section 4.3). Soil/sediment samples were categorized as surface samples where sample depths ranged from 0.0 to 0.5 ft bgs and as subsurface samples where sample depths were greater than 0.5 ft bgs. Samples collected in drainages were classified as sediment samples.

In October and November 2016, samples were collected from the locations shown in Figure 3-6 and are summarized in Table 3-2. Sample locations and the locations of mining-related features are also shown in Figure 3-6. The numbers of surface samples collected within specific mine features are listed in Table 3-3. Twenty-two surface soil/sediment grab samples were collected from each of the 22 locations in the Survey Area.

Field personnel collected, logged, classified, packaged, and shipped the samples in accordance with the *RSE Work Plan,* Sections 4.4, 4.9, 4.11, and Appendix E. Samples were shipped to ALS Environmental Laboratories in Fort Collins, Colorado for analyses of: Ra-226, uranium, arsenic, molybdenum, selenium, and vanadium, as described in the *RSE Work Plan,* Section 4.13.1. The surface soil/sediment analytical results are presented in Section 4.3. Field forms are provided in Appendix C.1 and the laboratory analytical data, data validation reports, and Data Usability Report for the analyses are provided in Appendix F.

3.3.2.2 Subsurface Soil Sampling

Site Characterization activities included subsurface soil sampling and associated laboratory analyses. Similar to the surface soil/sediment sampling discussed in Section 3.3.2.1, subsurface sampling locations were selected based on professional judgment (i.e., non-randomly) to evaluate concentrations of Ra-226 and metals in relation to the surface gamma survey measurements and site features (e.g., historical mining features and geologic features). Grab samples were collected with the intent to characterize specific intervals of interest (e.g., material within zones with elevated static gamma measurements). Composite samples were collected to provide a screening level assessment across an interval (e.g., soil collected in the reclaimed area on-site) and develop an understanding of the subsurface conditions and nature of bedrock at the Site. The usefulness of a composite sample may be limited when the sample is collected over an interval with varying soil or rock types or is excessively long (e.g., greater than 5 ft), which tends to dilute the constituent concentrations or sample heterogeneity. Additionally, surface and subsurface static gamma measurements were collected in the boreholes using the same equipment as described in Section 3.3.1.1. Static gamma measurements were collected by holding the detector in the borehole for a one-minute integrated count and are not comparable to the surface gamma survey measurements, which were collected as a walkover survey.

Subsurface samples were collected by advancing subsurface boreholes to a desired sample depth using either a 3-inch diameter hand auger or a Geoprobe™ 8140LC rotary sonic drilling rig (refer to Appendix C.2). Field personnel advanced the hand auger boreholes to the desired

sample depth manually, and the sonic drilling rig advanced the boreholes to the desired sample depth. The sonic drilling rig was equipped with a 4-inch diameter sonic core barrel that used cutting rotation and vibration to advance the boreholes. The sonic drilling method is ideal for use in rocky soils to obtain continuous samples in materials that are difficult to sample using other drilling methods (ASTM, 2016). It recovers a continuous and relatively undisturbed core sample for review and analysis that is representative of the lithological column at that borehole location (refer to Appendix C.2).

Eighteen boreholes were advanced in the Survey Area. Hand auger boreholes were drilled through the unconsolidated deposits and weathered bedrock until refusal on hard surface or competent bedrock. Sonic boreholes were generally advanced until competent bedrock was observed. Borehole depths ranged from 0.25 ft to 24 ft bgs, and the depth of unconsolidated deposits to bedrock in boreholes ranged from 0.25 ft to 4 ft bgs. The boreholes were advanced through silt, sand, gravel, weathered sandstone, and sandstone (refer to Appendix C.2 for borehole logs).

In October and November 2016, samples were collected from the locations shown in Figure 3-6 and are summarized in Table 3-2. Sample locations and the locations of mining-related features are also shown in Figure 3-6. The numbers of subsurface samples collected within specific mine features are listed in Table 3-3. Twenty-one subsurface samples (four soil, nine soil/bedrock, and eight bedrock) were collected from 12 borehole locations in the Survey Area. Multiple samples were collected from many of the boreholes. At five of the borehole locations (S135-SCX-008, -SCX-017, -SCX-018, -SCX-019, and -SCX-020) only static gamma measurements were collected. Field personnel advanced the boreholes to confirm depth to bedrock, collect subsurface static gamma measurements, and to observe gamma count rates. Field observations (e.g., depth to bedrock) from boreholes where samples were not collected were used to evaluate the physical conditions of the subsurface (refer to Section 4.0). Three of the boreholes (S135-SCX-008, -SCX-017, and -SCX-019) were advanced in the area of the historical pit (refer to Figures 2-8a and 3-6). It was an oversight by field personnel to not collect subsurface soil samples from these boreholes due to the potential presence of mine waste material in the pit. This is identified as a data gap in Section 4.8. Subsurface samples were not collected within the approximate locations of WP2 and WP3 and the subsurface samples collected within the approximate boundaries of WP1 and WP4 (one each) contained both soil and bedrock. It was an oversight for field personnel to not collect subsurface soil samples from WP1 through WP4 and this is identified as a data gap in Section 4.8.

Two cross-sections for the Site were produced using the subsurface borehole information, as shown in Figures 2-8a and 2-8b (refer to Section 2.2.2.2). The cross-sections show the extent and orientation of the consolidated and unconsolidated deposits in relation to the extent and orientation of the historical pit and the historical WP5 (refer to Section 2.1.1). The boreholes located closest to the cross-section lines were used to generate the cross-section figures, and all boreholes were used to determine the average unconsolidated material depth to assist with projecting depth to bedrock in relation to the cross-sections.

Cross section A-A' (refer to Figure 2-8a) is oriented roughly west-east. Lithological descriptions from eight sonic boreholes and two hand auger boreholes were used to model the subsurface geology. The average depth to bedrock along section A-A' is 2.5 ft bgs with a slight increase observed in the area of the historical pit (3 ft to 4 ft bgs). Borehole logs (refer to Appendix C.2) document that the historical pit is constrained on the east side by bedrock.

Cross section B-B' (refer to Figure 2-8b) is oriented roughly south-north. Lithological descriptions from four sonic boreholes (refer to Appendix C.2) in conjunction with surface geology observations made by field personnel were used to model the extent of unconsolidated material in the historical pit. Depth to bedrock coincident with the historical pit was logged at 3 ft to 4 ft bgs and the average depth to bedrock outside of the historical pit to the north was recorded at 2.5 ft bgs.

Field personnel logged, classified, packaged, and shipped the samples in accordance with the *RSE Work Plan,* Sections 4.5, 4.9, 4.11, and Appendix E. Samples were shipped to ALS Environmental Laboratories in Fort Collins, Colorado for analyses of Ra-226, uranium, arsenic, molybdenum, selenium, and vanadium, as described in the *RSE Work Plan,* Section 4.13.1. The subsurface analytical results are presented in Section 4.3. Field forms, including borehole logs showing static gamma measurements and Ra-226 analytical results, are provided in Appendix C.2. The laboratory analytical data, data validation reports, and Data Usability Report for the analyses are provided in Appendix F.

3.3.2.3 Water Sampling

According to the *RSE Work Plan*, Site Characterization activities were to include well water and surface water sampling, and associated laboratory analyses, of perennial water features identified during the Site Clearance desktop study (refer to Section 3.2.1). Per the *RSE Work Plan*, if well water or surface water sample analyte concentrations are above the established ILs then those sample areas would be considered for additional characterization in the future. From the desktop study, five potential water features were identified from the NNDWR database and *2007 AUM Atlas*, as detailed in Table 3-1 and shown in Figure 2-1. During Site Clearance field investigation activities, field personnel did not observe the five potential water features identified in the desktop study. However, field personnel did observe one additional water feature, an unmarked water well located 0.7 miles north of the Site, while they were looking for the five identified water features. For tracking purposes, Stantec labeled the well as S135-Well-1. Field personnel inspected the well and found it locked and located on a different AUM site (#134), as shown in Figure 2-1. Based on these findings, the water well (S135-Well-1) was not sampled per discussions with the USEPA and NNEPA.

Tanner Wash is the major drainage on-site (as shown in Figures 2-1, 2-5, and Appendix B photograph number 2) and only contains flowing surface water following storm events. It does not regularly contain water. As a result, surface water from Tanner Wash was not sampled as part of the Site Characterization activities in accordance with the requirements of the *Trust Agreement* and *Scope of Work,* which only require sampling of perennial water features.

3.3.3 Identification of TENORM Areas

Areas at the Site where TENORM is present were identified using multiple lines of evidence including:

1. Historical Data Review
    a. Aerial photographs
    b. USAEC records
    c. Reclamation records
    d. Other documents relevant to the Site, including those in the *2007 AUM Atlas*
    e. Interviews with residents living closest to the Site (for those sites where residents were available for interview)
    f. Consultation and site visits with NAML staff to identify reclamation features (for those sites reclaimed by NAML)
2. Geology/Geomorphology
    a. Hydrology/transport pathways with drainage delineation
    b. Site-specific geologic mapping including areas of mineralization
    c. Topography
3. Disturbance Mapping
    a. Exploration
    b. Mining
    c. Reclamation
4. Site Characterization
    a. Surface gamma surveys and subsurface static gamma measurements
    b. Soil/sediment sampling and analyses

Any areas where TENORM was not observed are considered to contain NORM, because soil and/or rock at the Site contain some amount of natural uranium and its daughter products. This area was mined because of the high levels of naturally occurring uranium. The areas containing NORM and/or TENORM are presented in Section 4.6. The volume of TENORM is presented in Section 4.7. The areas containing NORM and/or TENORM, along with additional findings of the RSE report, are identified to support future Removal or Remedial Action evaluations at the Site.

3.4 DATA MANAGEMENT AND DATA QUALITY ASSESSMENT

This section summarizes the data management and data quality assessment activities performed for the RSE.

3.4.1 Data Management

The DMP included in the *RSE Work Plan* describes the plan for the generation, validation, and distribution of project data deliverables. Successful data management comes from coordinating data collection, quality control, storage, access, reduction, evaluation, and reporting. A summary of the data management activities performed as part of the RSE process included:

- **Database** – Field-collected and laboratory analytical RSE data were stored in an Oracle SQL relational database, which increased data handling efficiency by using previously developed data entry, validation, and reporting tools. The Oracle SQL database was also used to export project data to a tabular format that can be used in a spreadsheet (e.g., Excel) and to the USEPA Scribe database format.

- **Scribe** – The Stantec Data Manager/Data Administrator was responsible for meeting the project data transfer requirements from the Oracle SQL database to Scribe, which is a software tool developed by the USEPA's Environmental Response Team to assist in the process of managing environmental data. Stantec maintained an Oracle SQL database and exported data from the Oracle SQL database to a Scribe compatible format following completion of each field investigation phase. Custom data queries and "crosswalk" export routines were built in Oracle SQL, to facilitate data export to the Scribe database format with the required frequency.

- **Geographic Information System (GIS)** – Spatial data collected during the RSE (e.g., sample locations and gamma measurements) were stored in a dedicated File Geodatabase for use in the project GIS. The geodatabase format enforces data integrity, version control, file size compression, and ease of sharing to preserve GIS output quality. Periodic geodatabase backups were performed to identify accidentally deleted or otherwise corrupt information that were then repaired or recovered, if applicable.

3.4.2 Data Quality Assessment

The QAPP, included in the *RSE Work Plan*, Appendix B, was followed for RSE data quality assessment, where the QAPP presents QA/QC requirements designed to meet the RSE DQOs. Data quality refers to the level of reliability associated with a particular data set or data point. The Data Usability Report included in Appendix F.1 provides a summary of the data quality assessment activities and qualified data for the RSE. A summary of findings, from the data quality assessment, are included below.

- **Data Verification** – The data were verified to confirm that standard operating procedures (SOPs) specified in the *RSE Work Plan* and *FSP* were followed and that the measurement systems were performed in accordance with the criteria specified in the QAPP. Any deviations or modifications from the *RSE Work Plan* are described in the appropriate RSE

report sections. The USEPA definition (USEPA, 2002) for data verification is provided in the glossary.

- **Data Validation** – The data were validated to confirm that the results of data collection activities support the objectives of the RSE as documented in the QAPP. The data quality assessment process was then applied using the validated data and determined that the quality of the data satisfies the intended use. The USEPA definition (USEPA, 2002) for data validation is provided in the glossary. A copy of the Data Usability Report is included in Appendix F.1 and a summary of the validation results is presented below:

    - **Precision** Based on the matrix spike/matrix spike duplicate (MS/MSD) sample, laboratory control sample/laboratory control sample duplicate (LCS/LCSD) sample, laboratory duplicate sample, and field duplicate results, the data are precise as qualified.

    - **Accuracy** Based on the initial calibration (ICAL), initial calibration verification (ICV), continuing calibration verification (CCV), MS/MSD, and LCS, the data are accurate as qualified.

    - **Representativeness** Based on the results of the sample preservation and holding time evaluation, the method and initial/continuing calibration blank (ICB/CCB) sample results, the field duplicate sample evaluation, and the reporting limit evaluation, the data are considered representative of the Site as reported.

    - **Completeness** All media and QC sample results were valid and collected as scheduled (i.e., as planned in the *RSE Work Plan*); therefore, completeness for these is 100 percent.

    - **Comparability** Standard methods of sample collection and standard units of measure were used during this project. The analyses performed by the laboratory were in accordance with current USEPA methodology and the QAPP.

Based on the results of the data validation, all data are considered valid as qualified.

4.0 FINDINGS AND DISCUSSION

4.1 BACKGROUND REFERENCE AREA STUDY RESULTS AND CALCULATION OF INVESTIGATION LEVELS

The sample locations in BG-3 and the results of the background reference area surface gamma survey are shown in Figure 4-1. The surface gamma survey in BG-3 did not cover the areal extent of the soil sample locations with the background reference area. However, the gamma survey measurements in BG-3 were within approximately 4 ft of the soil sample locations that were not within the areal extent of the surface gamma survey area. Analytical results of the samples collected from BG-3 are summarized in Table 4-1. The gamma measurements and surface soil sample analytical results collected from BG-3 were evaluated statistically to calculate ILs (refer to Appendix D.2).

Statistical evaluation of the gamma measurements and soil sample analytical results included identifying potential outlier values, interpreting boxplots and probability plots, comparing group means between the background reference areas and the respective Survey Area data, and calculating descriptive statistics for each of the background reference areas. The descriptive statistics included the 95 percent upper confidence limit (UCL) on the mean gamma measurements and Ra-226/metals concentrations, and the 95-95 upper tolerance limits (UTLs). The data were analyzed using R statistical programming packages and ProUCL 5.1 software (USEPA, 2016).

The DQOs presented in the RSE Work Plan indicate that the ILs would be developed using the 95 percent UCL on the mean of the background sample results. However, the 95-95 UTL was used as the basis for the ILs instead because it better reflects the natural variability in the background data and lends itself to single-point comparisons to the Survey Area data. This was a change from the *RSE Work Plan*, as agreed upon with the Agencies, prior to the change. The UTL represents a 95 percent UCL for the 95th percentile of a background dataset whereby Survey Area results above this value are not considered representative of background conditions. The UTL is a statistical parameter for the entire population of the variable, whereas the actual results are from a sample of the population. UTLs were calculated in accordance with USEPA's *ProUCL 5.1 Technical Guidance,* Sections 3.4 and 5.3.3 (USEPA, 2015). Appendix D.2 presents a comprehensive discussion on the derivation of the ILs for the Site, which are presented below.

The *RSE Work Plan* also stated that gamma radiation measurements from the background surface and subsurface soil would be combined to develop the IL for surface gamma radiation at the Site. However, the surface gamma radiation ILs were instead developed from the surface gamma survey data only. The Agencies have commented that this should be noted as a deviation from the *RSE Work Plan*. The subsurface static gamma measurements were excluded from the derivation of the surface gamma IL for two reasons: (1) they were collected using a different method (static one-minute measurements versus a walkover gamma survey); and

(2) because of the downhole geometric effects that influence subsurface static gamma measurements (refer to the discussion of geometric effects below).

The ILs for the Site were established using statistical analysis of background data collected from BG-3 (refer to Figures 3-2 and 3-3) and are as follows:

- Arsenic 2.51 milligrams per kilogram (mg/kg)
- Molybdenum 0.577 mg/kg
- Selenium – an IL for selenium was not identified because selenium sample results in BG-3 were all non-detect
- Uranium 34.1 mg/kg
- Vanadium 51.5 mg/kg
- Ra-226 5.45 pCi/g
- Surface gamma measurements 14,373 cpm

It is important to note that comparisons to the IL (i.e., 1.5 times the IL) are provided for context, and evaluations of: (1) areas of the Site; (2) samples or; (3) TENORM that exceed the ILs, which are based on the statistically derived IL values.

In addition to the surface gamma survey performed in background reference areas, subsurface static gamma measurements were collected in the borehole completed at BG-3. These measurements were used to establish a subsurface static gamma screening level for the Survey Area. Where possible, the selected subsurface static gamma screening level value met the following criteria: (1) it was the lowest value measured at or below 1 ft bgs and (2) it was not directly measured on bedrock. The subsurface static gamma screening level from BG-3 provides a comparison and assessment tool for the Survey Area and is included as an IL for the Site.

However, it is important to consider that the subsurface static gamma IL is based on a single measurement, and it is not statistically derived. For this reason, subsurface static gamma IL exceedances should be considered in conjunction with additional lines of evidence including: (1) down-hole trends of static gamma measurements; (2) changes in lithology within the borehole; and (3) a qualitative comparison of subsurface static gamma measurements to Ra-226 and/or metals concentrations in subsurface samples.

Subsurface static gamma measurements from BG-3 are summarized in Table 4-2 and in Appendix C.2. Two subsurface static gamma measurements were evaluated to identify the subsurface static gamma IL for the Survey Area. Measurements of 22,404 and 25,356 cpm were collected from BG-3 borehole S135-BG3-011, at down-hole depths of 0.5 and 0.9 ft bgs, respectively. The lowest measured value (22,404 cpm), collected at 0.5 ft bgs, was selected as the subsurface static gamma IL for the Survey Area. However, this measurement may be more

representative of unconsolidated material than the higher measurement (collected at 0.9 ft bgs), which was collected at the interface of unconsolidated material and bedrock.

It is important to consider that the subsurface static gamma IL measurements may be elevated relative to the surface gamma IL because increases in static gamma measurements with depth can result from the detector being in closer proximity to bedrock that has naturally elevated concentrations of radionuclides, and/or geometric effects. Geometric effects are the result of the detector measuring gamma radiation from all directions, regardless of whether it is in a borehole or suspended in air. Gamma radiation measured with the detector held at the ground surface is primarily from the ground beneath the detector. As the detector is advanced down the borehole it measures gamma radiation from the surrounding material emanating from an increasing number of angles. Therefore, as the detector is lowered in the borehole it will generally measure increasingly higher values to a certain depth given a constant source. At approximately 1ft to 2 ft bgs, the detector is essentially surrounded by solid ground and further increases related to borehole geometry are not expected. Because downhole geometric effects influence static gamma measurements just below ground surface, static gamma measurements collected at or greater than 0.1 ft bgs are considered subsurface.

Due to the differing geometric effects, surface static gamma measurements at borehole locations may only be qualitatively compared to subsurface static gamma measurements, and the subsurface static gamma IL does not apply to the surface static gamma measurements. Instances where the surface static gamma measurement is greater than subsurface static gamma measurements suggest higher levels of radionuclides and may be indicative of the presence of TENORM at the surface, but additional lines of evidence are generally needed to support that conclusion.

The Site gamma measurements, and soil and sediment sample analytical results were compared to their respective ILs to confirm COPCs (refer to Section 4.4) and to identify areas of the Site where ILs are exceeded (refer to Section 4.5). The calculated ILs provide a line of evidence to evaluate potential mining-related impacts, and to support future Removal or Remedial Action evaluations at the Site.

4.2 SITE GAMMA RADIATION SURVEY RESULTS AND PREDICTED RADIUM-226 CONCENTRATIONS

4.2.1 Site Gamma Radiation Results

4.2.1.1 Surface Gamma Survey

Results of the Site surface gamma survey are shown in Figure 4-1 where the calculated surface gamma ILs for each background reference area are used to set bin ranges with color coding to illustrate the spatial extent and patterns of surface gamma measurements within the entire Survey Area. The bins ranges were based on the minimum site gamma measurement, the BG-3 IL, and the maximum site gamma measurement. The maximum survey measurement was

93,363 cpm, which was greater than six times the maximum BG-3 IL of 14,373 cpm and was measured at a bedrock outcrop along the claim boundary and west of the eastern reclaimed area (refer to Figures 3-6 and 4-1).

The spatial distribution of surface gamma measurements and IL exceedances are shown in Figure 4-1. The surface gamma measurements were generally highest in the western corner of the Site, in the area coincident with the weathered sandstone bedrock outcrops (refer to Figure 2-7 and Appendix B photograph number 1) and point sources of potential waste rock related to WP5.

Two potential data gaps were identified for the surface gamma survey. The approximate centerline of the potential haul road was not surveyed, but the shoulders were; and the shoulders of the roads that run from Indian Route 6730 to the two home-sites were not surveyed, but the approximate centerlines were. These were due to miscommunication with field personnel.

4.2.1.2 Subsurface Gamma Survey

Surface and subsurface static gamma measurements were collected at eight of the 18 borehole locations. A surface static gamma measurement was not collected at borehole locations S135-SCX-003, -SCX-006, -SCX-007, -SCX-008, -SCX-010, -SCX-013, -SCX-014, -SCX-015; -SCX-016, and -SCX-017 (refer to Appendix C.2). Surface and subsurface static gamma measurement locations are shown in Figure 4-1. Measurements and corresponding measurement depths are provided in Table 4-2 and are shown on the borehole logs in Appendix C.2.

The Survey Area subsurface static gamma measurements exceeded the BG-3 subsurface static gamma measurement IL of 22,404 cpm in borehole locations S135-SCX-003, -SCX-004, -SCX-007, -SCX-008, -SCX-011 and –SCX-012. Borehole locations S135-SCX-004, S135-SCX-011, and S135-SCX-012 were located in the area coincident with the historical WP5, and borehole S135-SCX-007 and S135-SCX-008 were located in the area coincident with the historical pit. The highest subsurface static gamma measurement from unconsolidated material was 263,646 cpm at borehole S135-SCX-012 (0.1 ft bgs), and the highest subsurface static gamma measurement in bedrock was 366,224 at borehole S135-SCX-007 (6.5 ft bgs). Borehole S135-SCX-007, which had a total depth of 10.0 ft bgs, was the only borehole having subsurface static gamma measurements in bedrock that exceeded the subsurface IL. The subsurface static gamma IL was not exceeded in all other boreholes where subsurface static gamma measurements were collected in bedrock. Subsurface static gamma measurements did not exceed the subsurface static gamma measurement IL in borehole S135-SCX-006, which was the deepest borehole on-site (24.0 ft bgs). Subsurface static gamma measurements were variable with depth at 12 boreholes, increased with depth at four boreholes, and decreased with depth at two boreholes. In addition, the cross-sections depicted in Figures 2-8a and 2-8b also show select static gamma measurements in relation to the subsurface IL.

4.2.2 Gamma Correlation Results

The high-density surface gamma measurements and concentrations of Ra-226 in surface soils obtained from the Gamma Correlation Study (refer to Section 3.3.1.3) were used to develop a correlation equation, using regression analysis, between the mean gamma measurements and Ra-226 concentrations measured in the co-located composite surface soil samples. This correlation is meant to be used as a general screening tool and provides approximate predicted Ra-226 concentrations.

Analytical results of the correlation samples, which were used to develop the correlation equation, are presented in Table 4-3. The mean value of the gamma survey results from the correlation plots, with their corresponding Ra-226 concentrations and a graph showing the linear regression line and adjusted Pearson's Correlation Coefficient (R^2) value for the correlation, are shown in Figure 4-2a. The regression produced an adjusted R^2 value of 0.87 which is within the DQO criterion of 0.8 to 1.0 described in the RSE Work Plan and indicates that surface gamma results correlate with Ra-226 concentrations in soil. The correlation model may have been influenced by the limited number of correlation sample locations. Users of the regression equation should be aware of the limitations of the dataset and be cautious when estimating radium-226 concentrations. The correlation equation to convert gamma measurements in cpm to predicted surface soil Ra-226 concentrations in pCi/g for the Site is:

Gamma (cpm) = 3,635 x Surface Soil Ra-226 (pCi/g) + 14,212

The predicted Ra-226 concentrations in soil, as calculated from the gamma measurements using the developed correlation equation, are shown in Figure 4-2a. Ra-226 concentrations predicted using gamma measurements lower than the minimum (10,241 cpm) and greater than the maximum (57,665 cpm) mean gamma measurements from the Gamma Correlation Study are extrapolated from the regression model and are therefore uncertain. Using the correlation equation, the predicted Ra-226 concentration associated with the minimum mean gamma measurement is -1.1 pCi/g and the concentration associated with the maximum mean gamma measurement is 12.0 pCi/g. Therefore, predicted Ra-226 concentrations less than -1.1 pCi/g and greater than 12.0 pCi/g should be limited to qualitative use only. Negative values for Ra-226 are a function of the linear regression equation and are not physically possible.

The correlation equation predicted Ra-226 concentrations that were less than zero for gamma survey measurements below 14,212 cpm. The predicted concentrations are shown in Figure 4-2a and the values less than zero occur in areas covering more than half the Site. The only area that does not have negative predicted values is located in the area of historical WP5. The elevated predicted Ra-226 concentrations shown in Figure 4-2a occur in the same areas where the elevated surface gamma measurements occur (refer to Section 4.2.1). This is because the predicted Ra-226 concentrations are based on a correlation with the gamma measurements. Predicted Ra-226 concentrations in the Survey Area range from -1.6 to 21.8 pCi/g, with a mean of -0.5 pCi/g, and a standard deviation, of 0.9pCi/g. Bin ranges in Figure 4-2a are based on these mean and standard deviation values.

The gamma correlation was not used for the Site Characterization, which instead relied on actual gamma radiation measurements and soil analytical results. However, predicted Ra-226 concentrations were compared to the Ra-226 laboratory concentrations measured in surface soil samples collected at surface and borehole locations, as shown in Figure 4-2b. The correlation results were also compared to investigation levels, as shown in Figure 4-2c. Per the Agencies, these comparisons can be used for site characterization and are one of many analyses that can be used to interpret the data (NNEPA, 2018).

When comparing the predicted Ra-226 concentrations to the Ra-226 laboratory concentrations, soil/sediment sample locations are generally not co-located with specific gamma measurement locations (refer to Figure 4-2b). Therefore, the measured Ra-226 laboratory concentrations can only be qualitatively compared to the nearby predicted Ra-226 concentrations. Fifteen out of 23 sample locations did not have Ra-226 laboratory concentrations that were within the applicable predicted Ra-226 bin ranges, in 13 of the 15 sample locations where the predicted Ra-226 concentration and the Ra-226 concentration detected in the soil/sediment sample did not agree, the predicted concentration was lower than the reported laboratory concentration detected in the soil/sediment sample. The majority of these locations had Ra-226 laboratory concentrations less than 2.0 pCi/g, but were associated with predicted Ra-226 concentrations that were less than zero. However, two sample locations (S135-CX-003, and -SCX-011) had particularly notable differences between the predicted and laboratory Ra-226 concentrations; these samples were located in the area of historical WP5.The differences observed between the predicted and actual Ra-226 values are likely a function of the natural heterogeneity in Ra-226 concentrations and gamma radiation measurements, which affects the correlation based on the five Gamma Correlation Study areas, and the predicted values, based on the subsequent gamma measurements. However, the correlation may be useful as a screening tool as it provides a representative estimate of Ra-226 concentrations across the Site similar to the actual results.

The predicted Ra-226 concentrations were also compared to the Ra-226 IL, as shown in Figure 4-2c. The symbols for surface sample locations and boreholes where Ra-226 concentrations in surface soil/sediment samples exceeded the IL are highlighted with yellow halos. Predicted Ra-226 concentrations exceeded the Ra-226 IL in a limited area of historical WP5 and at bedrock outcrops along the northern claim boundary. The predicted Ra-226 concentrations were less than the Ra-226 IL for the majority of the Site. In addition, with the exception of two sample locations (S135-CX-003 and -SCX-011), soil/sediment samples that exceeded the Ra-226 IL were located in areas that were also predicted to exceed the Ra-226 IL. Samples S135-CX-003 and -SCX-011 had Ra-226 laboratory concentrations that exceeded the IL, but were not located in areas predicted to exceed the IL. The area of the Site where predicted Ra-226 values exceeded the ILs is compared to surface gamma IL exceedances in the surface gamma survey in Section 4.5.

The correlation soil samples were also analyzed for thorium isotopes Th-232 and Th-228. The objectives of the thorium analyses were to assess the potential effects of Th-232 series radioisotopes on the correlation of gamma measurements to concentrations of Ra-226 in

surface soils (i.e., to evaluate whether gamma-emitting radioisotopes in the Th-232 series are impacting gamma measurements at the Site). The justification for the analysis is provided in Section 3.3.1.3. A multivariate linear regression (MLR) model was performed by ERG to relate the gamma count rate to multiple soil radionuclides simultaneously. The MLR and results are described extensively in Appendix A. ERG identified that the thorium series radionuclides do not affect the prediction of concentrations of Ra-226 from gamma survey measurements at the Site.

4.2.2.1 Secular Equilibrium Results

The activities of Th-230 and Ra-226 were compared to consider whether the uranium series is in secular equilibrium at the Site (refer to Section 3.3.1.4 and Appendix A). A linear regression was performed on the dataset (refer to Appendix A Figure 9). The p-value for the regression slope is significant (i.e., $p < 0.05$) and the adjusted R^2 meets the study DQO (adjusted $R^2 > 0.8$), indicating that Ra-226 and Th-230 exist in equilibrium. However, when compared to a y=x line (this line represents a perfect 1:1 ratio between Th-230 and Ra-226, indicating secular equilibrium), the y=x line falls partially outside of the 95% UCL bands of the Th-230/Ra-226 regression, indicating Ra-226 and Th-230 are not in secular equilibrium at the Site (refer to figures in Appendix A). This may be a consideration in the future if a human health and/or ecological risk assessment is performed.

4.3 SOIL METALS AND RADIUM-226 ANALYTICAL RESULTS

A total of 22 surface soil/sediment grab samples (21 soil and one sediment) from 22 locations, four subsurface soil grab/composite samples from four borehole locations, and 17 samples that contained soil/bedrock or bedrock from 10 borehole locations were collected at the Site (refer to Table 3-2). The metals and Ra-226 analytical results for the Survey Area are compared to their respective ILs and are presented in Table 4-4. Figure 4-3 presents the spatial patterns, both laterally and vertically, of metals, Ra-226 detections, and IL exceedances in the soil, soil/bedrock, and bedrock samples. There were no IL exceedances in the one sediment sample (S135-CX-008).

Ra-226 and/or metals concentrations exceeded their respective ILs in six surface soil samples, two subsurface soil samples, and eight subsurface soil/bedrock or bedrock samples. The maximum Ra-226 and metals concentrations were detected in three areas: the area coincident with the weathered sandstone bedrock outcrops (refer to Figure 2-7), the area coincident with the southern half of the historical pit, and the area coincident with historical WP5.

The maximum concentrations in soil for Ra-226, uranium, arsenic, and molybdenum were detected in the area coincident with historical WP5 (S1385-CX-003, -SCX-004 and -SCX-012). Presented sample counts include normal samples and do not include duplicate samples. Surface and subsurface soil, soil/bedrock, and bedrock IL exceedances for each analyte are described below:

- Ra-226

    - The Ra-226 IL (5.45 pCi/g) was exceeded in six of 22 surface soil samples and two of four subsurface soil samples. Ra-226 concentrations ranged from 0.56 to 1310 pCi/g. The maximum concentration was in a subsurface soil sample collected from borehole S135-SCX-012 at a depth of 0.8 to 1.0 ft bgs. The highest concentrations occurred in surface and subsurface soil (S135-CX-002, -SCX-004 and -SCX-012) collected from the area coincident with historical WP5. Additionally, Ra-226 was detected in five of the 17 samples that contained soil/bedrock or bedrock at concentrations ranging from 6.2 to 71.4 pCi/g. Subsurface bedrock samples collected at depths of 4.0 to 4.5 ft bgs from borehole S135-SCX-012 did not exceed the Ra-226 IL.

- Uranium

    - The uranium IL (34.1 mg/kg) was exceeded in three of 22 surface soil samples and one of four subsurface soil samples. Uranium concentrations ranged from 0.38 to 1400 mg/kg. The maximum concentration was in a subsurface soil sample collected from borehole S135-SCX-012 at a depth of 0.8 to 1.0 ft bgs. The highest concentrations occurred in surface and subsurface soil (S135-SCX-004 and -SCX-012) collected from the area coincident with historical WP5Additionally, uranium was detected in one of the 17 samples that contained soil/bedrock at a concentration of 130 mg/kg. Subsurface bedrock samples collected at depths of 4.0 to 4.5 ft bgs from borehole S135-SCX-012 did not exceed the uranium IL.

As a broader point of reference, a regional study of the Western US documented uranium concentrations in soil that ranged from 0.68 to 7.9 mg/kg, with a mean value of 2.5 mg/kg (USGS, 1984). Uranium concentrations exceeded the maximum regional value in 12 out of 43 Survey Area soil, soil/bedrock, or bedrock samples.

- Arsenic

    - The arsenic IL (2.51 mg/kg) was exceeded in five of 22 surface soil samples and one of four subsurface soil samples. Arsenic concentrations ranged from 0.61 to 69 mg/kg. The maximum concentration was in a subsurface soil sample collected from borehole S135-SCX-012 at a depth of 0.8 to 1.0 ft bgs. The highest concentrations occurred in surface soil (S135-SCX-003) collected from the area coincident with the weathered sandstone bedrock outcrops and subsurface soil (S135-SCX-0012) collected from the area coincident with historical WP5. All other concentrations were less than two times the arsenic IL. Additionally, arsenic was detected in one of the 17 samples that contained soil/bedrock at a concentration of 6.8 mg/kg. Subsurface bedrock samples collected at depths of 4.0 to 4.5 ft bgs from borehole S135-SCX-012 did not exceed the arsenic IL.

As a broader point of reference, a regional study of the Western US documented arsenic concentrations in soil that ranged from less than 0.10 to 97 mg/kg, with a mean value of 5.5 mg/kg (USGS, 1984). All arsenic concentrations were within the typical range of regional values in the Survey Area soil, soil/bedrock, or bedrock samples.

- Molybdenum

    - The molybdenum IL (0.577mg/kg) was exceeded in three of 22 surface soil samples and two of four subsurface soil samples. Molybdenum concentrations ranged from 0 to 65 mg/kg. The maximum concentration was in a subsurface soil sample collected from borehole S135-SCX-012 at a depth of 0.8 to 1.0 ft bgs. The highest concentrations occurred in surface soil (S135-CX-003 and -SCX-004) and subsurface soil (S135-SCX-0012) collected from the area adjacent to and coincident with historical WP5. All other concentrations were less than three times the molybdenum IL. Additionally, molybdenum was detected in six of the 17 samples that contained soil/bedrock at concentrations ranging from 0.63 to 4.9 mg/kg.

As a broader point of reference, a regional study of the Western US documented molybdenum concentrations in soil that ranged from less than 3 to 7 mg/kg, with a mean value of 0.85 mg/kg (USGS, 1984). All molybdenum concentrations, except for the maximum concentration of 69 mg/kg, were within the typical range of regional values in in the Survey Area soil, soil/bedrock, or bedrock samples.

- Selenium – An IL for selenium was not identified because selenium sample results in BG-3 were all non-detect. Selenium was detected in one surface soil sample (S135-CX-003) collected from the area adjacent to historical WP5 at a concentration of 1.3 mg/kg.

As a broader point of reference, a regional study of the Western US documented selenium concentrations in soil that typically ranged from less than 0.10 to 4.3 mg/kg, with a mean value of 0.23 mg/kg (USGS, 1984). Selenium concentrations were within the typical range of regional values in the Survey Area soil, soil/bedrock, or bedrock samples.

- Vanadium

    - The vanadium IL (51.5 mg/kg) was not exceeded in any of the surface soil or subsurface soil, soil/bedrock, or bedrock samples. Vanadium concentrations ranged from 6.3 to 37 mg/kg. The maximum concentration was in a subsurface bedrock sample collected a depth of 4.0 to 4.5 ft bgs from borehole S135-SCX-010 (coincident with historical WP5).

As a broader point of reference, a regional study of the Western US documented vanadium concentrations in soil that ranged from 7 to 500 mg/kg, with a mean value of 70 mg/kg (USGS, 1984). All vanadium concentrations were within the typical range of regional values in soil/sediment samples from Survey Areas A and B.

4.4 CONSTITUENTS OF POTENTIAL CONCERN

Based on the results presented in Sections 4.2 and 4.3, gamma radiation measurements and arsenic, molybdenum, uranium, and Ra-226 concentrations in soil/sediment exceeded their respective ILs and are confirmed COPCs for the Site. An IL for selenium was not identified because selenium sample results were non-detect in BG-3. However, because selenium was detected in soil/sediment samples from the Survey Area, it is also confirmed as a COPC for the Site.

4.5 AREAS THAT EXCEED THE INVESTIGATION LEVELS

The approximate lateral extent of surface gamma IL exceedances in soil/sediment is 2.5 acres, as shown in Figure 4-4. To estimate this area, a polygon was contoured around portions of the Site that had multiple, contiguous surface gamma IL exceedances and then the total area within the polygon was calculated. One sample location with an IL exceedance was in an area that was not included in the 2.5 acres. Sample location S135-SCX-016 had a molybdenum IL exceedance in a sample that was collected across the bedrock interface and outside of the historical mining pit. As a result, the molybdenum IL exceedance in S135-SCX-016 appears to be related to mineralized bedrock and not historical mining activities.

Figure 4-5 shows the vertical extent of IL exceedances in each borehole by incorporating information from each location, including: (1) depth to bedrock; (2) total borehole depth; and (3) depth range of IL exceedances. Table 4-5 lists the IL exceedances identified at each borehole location and Figures 4-5 also shows the surface gamma IL exceedances for reference.

IL exceedances in metals and Ra-226 concentrations at surface and subsurface sample locations were typically, but not always, co-located with surface gamma survey measurements and/or subsurface static gamma measurements that also exceeded their ILs. Variations occur due to natural variability and the different field methods. For example, a small piece of mineralized rock or petrified wood may have been collected in a soil sample but may not have been detected by the gamma meter in the gamma survey due to distance from the meter, the depth below ground surface, or because the gamma meter measures radiation over a larger area than the discrete soil sample location.

The lateral extent of the IL exceedances (for surface gamma data) shown in Figure 4-4a were compared to the predicted Ra-226 concentrations that exceeded ILs in Figure 4-2c. Predicted Ra-226 concentrations exceeded the Ra-226 IL in a much smaller area of the Site than where surface gamma measurements exceeded the surface gamma IL. The inconsistency between the predicted Ra-226 exceedances and the surface gamma exceedances may be the result of the surface gamma IL being relatively low when compared to the Ra-226 IL or because the predicted Ra-226 concentrations are lower than the actual concentrations.

4.6 AREAS OF TENORM AND NORM

A multiple lines of evidence approach was used to evaluate the Site and distinguish areas of TENORM from areas of NORM within the Survey Area, as described in Section 3.3.3. Based on this evaluation, 3.9 acres, out of the 21.2 acres of the Survey Area, were estimated to contain TENORM at the Site. This estimate is inclusive of the potential haul road and the two reclamation areas. The area containing TENORM is shown in relation to the lateral extent of IL exceedances in Figure 4-6 and in relation to the gamma measurements in Figure 4-7.

The RSE data that supports the delineation of TENORM at the Site includes:

- Historical Data Review Conclusions
    - Historical document review indicates that the Site was mined by excavating an open pit.
    - Total ore production from the Site was 793.61 tons (approximately 1,587,220 pounds) of ore that contained 4,758.43 pounds of 0.30 percent U_3O_8 and 599 pounds of 0.06 percent V_2O_5 (vanadium oxide).
    - Historical document review indicated NAML reclaimed the Site by backfilling the historical pit with waste pile material and re-grading the surfaces. In 1993, NAML issued an invitation for bids for the reclamation of 11 AUMs, referred to as the Cameron Project No. 2. The Site was included in this bid document. The bid document listed the following reclamation activities were needed for the Site: (1) improve access to the Site; (2) improve access to the pit; (3) excavate the sediment-filled pit and save the excavated material for topsoil (prior to this bid document being issued the pit had been partially filled with sediment from Tanner Wash; (4) excavate waste piles and place into the pit; (5) re-grade the disturbed areas to a slope of 5h:1v (horizontal to vertical) or less. In 1995, the Tuba City NAML Reclamation Program submitted a reclamation program closeout report for the Cameron Project No. 2 to the NAML Reclamation Window Rock Administration. The closeout report stated that the Cameron Project No. 2 was complete and provided reclamation activity accomplishments by the project and not by individual AUM. Therefore, it is assumed that the proposed reclamation activities for the Site listed above were accomplished, but cannot be confirmed based on historic documents. In addition, the *2007 AUM Atlas* lists the Site as reclaimed by NAML.
    - Historical aerial photographs show evidence of the mining and reclamation activities occurring on-site.
    - Nearby residents recall that mining occurred at the Site.
- Geology/geomorphology
    - Bedrock at the Site consisted of sandstone and siltstone with lesser amounts of conglomerate and shale of the Petrified Forest Member of the Triassic Chinle Formation. Additionally, portions of the Site consisted of shallow or outcropping bedrock. Therefore, the geology and geomorphology of the Site was conducive to the presence of NORM at or near the ground surface.
    - Two ephemeral drainages are present on-site. The main drainage for the Site was Tanner Wash, located to the north of the Site. A second small drainage feature was located east and south of the central reclaimed area. The drainages could have transported NORM/TENORM to the west.

- Disturbance Mapping – Stantec field personnel observed the following features:

    - Two reclaimed areas were mapped. The central reclaimed area was coincident with the historical pit and the western reclaimed area was coincident with historical WP5. The central reclaimed area was approximately 350 ft wide and 280 ft long; however, it was difficult for field personnel to identify the exact extent of the area due to the shallow slope and surface erosion that had occurred on the reclaimed area. The western reclaimed area was approximately 190 ft wide and 140 ft long, and field personnel observed petrified wood and cobble-sized pieces of potential waste rock (radioactive point sources) in this area.

    - A debris pile was mapped. The debris pile was partially buried in sand and contained metal cans, plastic bottles, gloves, and other non-identifiable debris. It was not likely the debris pile was related to historical mining activities because much of the debris was plastic, which post-dates the mining activities that occurred on-site.

    - One potential haul road ran from the home-sites to the central reclaimed area.

- Site Characterization

    - The surface gamma measurements in the western corner of the Site that contains TENORM are higher than the surface gamma measurements in the remaining TENORM area because this area is coincident with weathered sandstone bedrock outcrops and point sources of potential waste rock related to WP5. Surface and subsurface samples from the area also contained the highest Ra-226 and uranium concentrations at the Site.

    - Surface gamma measurements in the area of the historical pit exceeded the surface gamma IL primarily in the western portion of the pit and potential waste rock was observed in the S135-SCX-007 borehole. Bedrock was not observed deeper than 4 ft bgs in the area where the historical pit was located.

    - Surface gamma measurements collected along the potential haul road generally did not exceed the surface gamma IL. Subsurface samples were not collected from the potential haul road and additional characterization may be considered during future studies.

    - Surface gamma measurements collected along the ephemeral drainages generally did not exceed the surface gamma IL. Subsurface samples were not collected from the ephemeral drainages and additional characterization may be considered during future studies.

    - Cobble-sized pieces of potential waste rock and petrified wood were observed in the western reclaimed area. Potential mine waste material was present in boreholes in the area of the historical WP5 (S135-SCX-004, -SCX-011, and -SCX-012) where static gamma measurements and Ra-226/metals concentrations exceeded their ILs. The uranium concentration in a sample from S135-SCX-012 was 1,400 mg/kg and gray and yellow mottled soil was present. Potential mine waste material was also present in S135-SCX-007 located within the historical pit, which consisted of sand and angular gravel and sandstone fragments to 4 ft bgs (refer to Appendix C). However, static gamma measurements in S135-SCX-007 were relatively low (less than 24,000 cpm).

- Metals concentrations in samples collected outside the area of TENORM (six locations) were less than or within the regional concentration values.

- It is important to consider that with the exception of one location, the subsurface static gamma IL was not used as the only evidence to delineate the vertical extent of TENORM that exceeded the IL at the Site. Borehole S135-SCX-008 is the one exception. The borehole was placed in the western extent of the historical pit and the depth to bedrock and the subsurface static gamma IL exceedances were utilized to develop the depth profile of the pit.

The area of the Site considered to contain TENORM (i.e., multiple lines of evidence indicated the presence of mining-related impacts) was 3.9 acres, as shown on Figure 4-8a. Portions of the TENORM exceeded one or more IL, where approximately 1.9 acres contained TENORM that exceeded the surface gamma IL and all sample locations within the TENORM boundary where TENORM exceeded the ILs. TENORM that exceeded the ILs in the Survey Area is shown on Figure 4-8a and is compared to mining-related features in Figure 4-8b.

4.7 TENORM VOLUME ESTIMATE

The volume estimate of TENORM that exceeded one or more ILs is approximately 3,371 yd^3, as shown in Figure 4-9. The volumes and areas of TENORM associated with specific mine features is listed in Table 3-3. This estimate was calculated using ESRI ArcGIS Desktop 10.3.1 Spatial Analyst Extension cut/fill tool (ESRI, 2017) utilizing the USGS (2017c) 10 m National Elevation Dataset coupled with hand-derived contours based on field personnel observations, depth to bedrock in boreholes, gamma measurements, sample analytical data, and historical documentation. Field observations included observations of disturbance, changes in vegetation, estimating/projecting the slope of underlying bedrock, and estimating the shape and topography of waste material and/or soil deposits.

TENORM exceeding the ILs at the Site was split into groups based on the depth or type of material to aid in analysis and describing the basis of the volumes. The locations, volume, and areas of these groups are shown in Figure 4-9. The assumptions that were used to calculate the volume of TENORM with IL exceedances were as follows:

General Assumptions

- It was assumed that subsurface bedrock encountered in boreholes was not previously modified by human activity and is therefore NORM.

- The subsurface static gamma IL for the Survey Area was not used as the only evidence to delineate the vertical extent of TENORM that exceeded the IL at the Site, except for at one borehole location (S135-SCX-008) in the western portion of the historical pit. The static gamma IL was used as one line of evidence as described in Section 4.1.

- The depth of the historical pit was contoured from 1 to 4 ft bgs based on the historical pit depth presented on Figure 2-2 and RSE subsurface drilling and hand auger observations (refer to Appendix C.2); bedrock was not observed deeper than 4 ft bgs in the area where

the historical pit was located. Figure 4-9 provides approximate subsurface contours of the depth to bedrock in the areas of the historical pit and historical WP5. The contours were drawn based on field observations and the historical NAML (1993) mine drawing (refer to Figure 2-2). Depths to bedrock are presented on two cross-sections, shown in Figures 2-8a and 2-8b and on drilling and hand auger boring logs included in Appendix C.2. Figure 4-9 and the cross-sections show the extent and orientation of the consolidated and unconsolidated deposits in relation to the historical pit and the historical WP5 (refer to Section 2.1.1).

Group Assumptions

- Group 1 (840 yd^3) - The depth of the historical WP5 area was contoured from 1 to 2 ft bgs based on the historical WP area depth presented on Figure 2-2 and RSE subsurface drilling and hand auger observations (refer to Appendix C.2). Although bedrock was observed at 2.75 ft bgs (S135-SCX-012) at one boring location in the area where the historical WP5 was located, a rounded averaged depth to bedrock from the three boring locations (S135-SCX-004, -SCX-011 and –SCX-012) was applied. TENORM that exceeds ILs in the western area of the historical pit (shown as dark blue in Figure 4-9) is based on subsurface static gamma measurement exceedances of 22,404 cpm at S135-SCX-008 (refer to Figure 4-5).

- Group 2 (2,531 yd^3) - TENORM was conservatively assumed to extend to 1 ft bgs in areas where surface IL gamma measurements were exceeded and where there were no other IL exceedances in the subsurface samples.

The following are volume estimates for the Site may be of interest (refer to Table 3-3):

- TENORM exceeding ILs in the historical pit is 464 yd^3.

- TENORM exceeding ILs in the area of historical WP5 is 602 yd^3.

Historical reclamation planning documents stated that approximately 12,060 yd^3 of mine waste material was present in waste piles at the Site (NAML, 1993). The planning document stated that NAML was to excavate material from the pit, place waste rock material into the pit, and then cover with clean material. Based on RSE activities, approximately 464 yd^3 of TENORM (including cover material) was estimated to be present in the historical pit. The calculated volume from the RSE study is much lower than the volume of waste material identified by NAML. However, it is important to consider that the reclamation documents were planning documents, and a final volume from reclamation activities was not provided.

4.8 POTENTIAL DATA GAPS AND SUPPLEMENTAL STUDIES

4.8.1 Data Gaps

Three potential data gaps were identified based on the Site Clearance and RSE data collection and analyses for the Site. These data gaps can be considered for subsequent evaluations in support of future Removal or Remedial Action evaluations at the Site.

1. The approximate centerline of the potential haul road was not surveyed, but the shoulders were; and the shoulders of the roads that run from Indian Route 6730 to the two home-sites were not surveyed, but the approximate centerlines were. These oversights were due to miscommunication with field personnel.

2. Field personnel did not collect subsurface samples from three boreholes (S135-SCX-008, -SCX-017, and -SCX-019) in the area of the historical pit due to an oversight.

3. Field personnel did not collect subsurface soil samples from WP1 through WP4 due to an oversight.

4.8.2 Supplemental Studies

Following review of the RSE report data and discussions with the Agencies, a limited number of items were identified for supplemental work to be considered for subsequent evaluations in support of future Removal or Remedial Action evaluations at the Site, as follows:

1. Additional correlation studies may be needed to refine the relationship between gamma and Ra-226.

2. Additional subsurface soil samples may be needed to further characterize the central pit.

3. The USEPA identified that there were potential discrepancies between the NNDWR database used for this study (received from NNDWR in 2016) and a 2018 version of the NNDWR database that the USEPA reviewed. It is recommended that the two databases be compared (with additional field work, if necessary) to confirm the locations of water features.

4. Subsurface samples were not collected in the potential haul roads and primary drainage; additional characterization may be warranted during future studies.

5.0 SUMMARY AND CONCLUSIONS

This report details the purpose and objectives, field investigation activities, findings, and conclusions of the Site Clearance and RSE activities conducted for the Site between October 2015 and March 2017. The Site is known as the Boyd Tisi No. 2 site and is also identified by the USEPA as AUM identification #135 in the *2007 AUM Atlas*.

The primary objectives of the RSEs are to provide data required to evaluate relevant site conditions and to support future removal action evaluations at the Sites. It is not intended to establish cleanup levels or determine cleanup options or potential remedies. The purpose of the RSE data (e.g., the review of relevant information and the collection of data related to historical mining activities) is to determine the volume of TENORM at the Site in excess of ILs as a result of historical mining activities. ILs are based on the background gamma measurements (in cpm), and Ra-226 and metals concentrations, determined through statistical analyses, that are used to evaluate potential mining-related impacts. The RSE included historical data review, visual observations, surface gamma surveys, surface and subsurface static gamma measurements, and soil/sediment sampling and analyses. An estimate of areas containing TENORM was made based on an evaluation of the RSE information/data and multiple lines of evidence. The correlation between gamma measurements (in cpm) and concentrations of Ra-226 in surface soils (pCi/g) was developed as a potential field screening tool for future Removal or Remedial Action evaluations. The gamma correlation was not used for the Site Characterization, which relied instead on the actual gamma radiation measurements and soil/sediment analytical results. However, predicted Ra-226 concentrations were compared to the actual Ra-226 laboratory results and ILs from the surface soil/sediment samples at the Agencies' request.

The Site is located in the Cameron, Arizona region and mining on-site occurred from 1957 to 1958. Historical mine workings on-site consisted of an open pit. Total ore production from the Site was 793.61 tons (approximately 1,587,220 pounds) of ore that contained 4,758.43 pounds of 0.30 percent U_3O_8 and 599 pounds of 0.06 percent V_2O_5. Mining at the Site ended in July 1958.

In 1993, the NAML issued an invitation for bids for the reclamation of 11 AUMs, referred to as the Cameron Project No. 2. The Site was included in the Cameron Project No. 2 bid document. In 1995 the Tuba City NAML Reclamation Program submitted a reclamation program closeout report for the Cameron Project No. 2 to the NAML Reclamation Window Rock Administration. The closeout report stated that the Cameron Project No. 2 was complete. The closeout report provided reclamation activity accomplishments by project and not by AUM; therefore, it is assumed that the proposed reclamation activities listed for the Site in the Cameron Project No. 2 bid document, were accomplished, but this cannot be confirmed in historical documents.

Five potential background reference areas were considered. One of the five potential background reference areas (BG-3) was selected to develop surface gamma, Ra-226, and metals ILs for the Survey Area at the Site. A subsurface static gamma IL was also identified for the Survey Area.

Gamma radiation measurements and arsenic, molybdenum, uranium, and Ra-226 concentrations in soil/sediment exceeded their respective ILs and are confirmed COPCs for the Site. An IL for selenium was not identified because selenium sample results were non-detect in BG-3. However, because selenium was detected in soil/sediment samples from the Survey Area, it is also confirmed as a COPC for the Site.

Surface gamma measurements and Ra-226 and metals concentrations were generally highest in three areas: (1) the area coincident with the weathered sandstone bedrock outcrops;(2) the area coincident with the southern half of the historical pit; and (3) the area coincident with historical WP5. The maximum gamma survey measurement was 93,363 cpm, which was more than six times the BG-3 IL and occurred at a bedrock outcrop along the northern claim boundary. The highest Ra-226 and metals concentrations, and subsurface static gamma measurements, were detected in surface/subsurface soil samples collected from the area coincident with historical WP5 and the area coincident with the historical pit.

Results of the Gamma Correlation Study indicated that surface gamma survey results correlate with Ra-226 concentrations in soil. Therefore, gamma surveys could be used during site assessments as a field screening tool to estimate Ra-226 concentrations in soil. Additional correlation studies may be needed to refine the relationship between gamma and Ra-226.

Based on the data analysis performed for this RSE report along with the multiple lines of evidence, approximately 3.9 acres out of the 21.2 acres of the Survey Area were estimated to contain TENORM. This estimate is inclusive a of potential haul road, the two reclamation areas, and including TENORM up to 2 ft deep in the area of historical WP5, and up to 4 ft deep in the area of the historical pit. The areas outside of the TENORM boundary that also contained elevated radiological materials are considered NORM (naturally occurring). Of the 3.9 acres that contain TENORM, 1.9 acres contain TENORM exceeding the surface gamma ILs and TENORM that exceeded the ILs at all soil/sediment sample locations. The volume of TENORM in excess of ILs was estimated to be 3,371 yd^3 (2,577 cubic meters).

Three potential data gaps were identified based on the Site Clearance and RSE data collection and analyses for the Site, as listed in Section 4.9. These data gaps can be taken into consideration for subsequent evaluations in support of future Removal or Remedial Action evaluations at the Site.

6.0 ESTIMATE OF REMOVAL SITE EVALUATION COSTS

The Boyd Tisi No. 2 RSE was performed in accordance with the requirements of the *Trust Agreement* to characterize existing site conditions. Project costs related to the RSE include the planning and implementation of the scope of work stipulated in the *Site Clearance Work Plan* and *RSE Work Plan,* and community outreach. Stantec's costs associated with the Boyd Tisi No. 2 RSE were $527,783. Stantec's costs associated with interim actions (sign installation) were $4,000. In addition, Administrative costs provided by the Trust were estimated currently at $191,500[9,10]. Administrative costs will change due to continued community outreach and close out activities.

[9] This cost is based on an approved budget of May 8, 2018; Administrative work, including community communications, are not yet complete.
[10] Administrative costs were averaged across all Sites.

7.0 REFERENCES

Arizona Native Plant Society, 2000. Arizona Rare Plant Field Guide. US Government Printing Office. Washington, D.C.

ASTM, 2016. ASTM D6914 / D6914M-16, Standard Practice for Sonic Drilling for Site Characterization and the Installation of Subsurface Monitoring Devices, ASTM International, West Conshohocken, PA, www.astm.org

BING® Maps, 2018. BING Maps imagery web mapping service [Webpage] located at https://www.bing.com/maps. Accessed June 2018.

Chenoweth, W.L. 1993: Geology and Production History of the Uranium Ore Deposits in the Cameron Area, Coconino County, Arizona. Arizona Geological Survey, Tucson, Arizona.

Chenoweth W.L., Malan, R.C 1973. The uranium deposits of northeastern Arizona, New Mexico Geological Society 24 Annual Fall Field Conference Guidebook p. 139-149.

Dinétahdóó Cultural Resource Management, 2016. DCRM 2016-08 A Cultural Resources Inventory of Two Abandoned Uranium Mines (Hoskie Tso No. 1 and Boyd Tisi No. 2) in Indian Wells and Cameron Chapter, Navajo Nation. August.

Encyclopedia Britannica, 2017. [Webpage] located at https://www.britannica.com/place/Colorado-Plateau. Accessed June 05, 2017.

English Oxford Dictionary, 2018. [Webpage] located at https://en.oxforddictionaries.com/definition/geomorphology. Accessed January 16, 2018.

ESRI World Imagery Map Service, 2018. [Webpage] located at (http://www.esri.com/data/imagery. June.

Hendricks, T.J., 2001. An Aerial Radiological Survey of Abandoned Uranium Mines in the Navajo Nation. Overview of Acquisition and Processing Methods used for Aerial Measurements of Radiation Data for the USEPA by the US Department of Energy under IAG DW 8955235-01-5. Survey conducted in Arizona, New Mexico, Utah.

Kiver, E.P. and Harris, D.V., 1999. Geology of US Parklands (5th ed.). John Wile & Sons. ISBN0-471-33218-6.

MWH, now part of Stantec Consulting Services Inc. (formerly MWH Americas, Inc.) (MWH), 2016a. Site Clearance Work Plan, Navajo Nation Abandoned Uranium Mines Environmental Response Trust. April.

MWH, 2016b. Navajo Nation AUM Environmental Response Trust – First Phase Removal Site Evaluation Work Plan. October.

MWH, 2016c. Boyd Tisi No.2 Western Site Clearance Data Report – Revision 1, Navajo Nation Abandoned Uranium Mines Environmental Response Trust. December.

National Park Service, 2017. [Webpage] located at https://science.nature.nps.gov/im/units/scpn/climate/climate.cfm. Accessed 2017 August 21.

Navajo Abandoned Mine Lands Reclamation Department (NAML), 1993. Cameron Project 2 Contract Documents, September.

NAML, 1995. Close Out Report FY 94, Cameron Project No. 2. September.

Navajo Nation Department of Fish and Wildlife (NNDFW), 2008. Biological Resource Land Use Clearance Policies and Procedures, RCS-44-08. September 10.

Navajo Nation Division of Natural Resources (NNDNR), 2006. GIS Section; Navajo Nation BIA Agency, Grazing, and Chapter Boundaries. Map. February.

Navajo Nation Environmental Protection Agency (NNEPA), 2018. Letter and Agency Comments on Draft Boyd Tisi No.2 Removal Site Evaluation (RSE) Report. January 23, 2018.

Navajo Natural Heritage Program (NNHP), 2008. *Species Accounts*, Navajo Nation Endangered Species List, version 3.08.

Navajo Nation Historic Preservation Department (NNHPD), 2016. The Navajo Nation Permit Package 2016, Section Three: Fieldwork, Report Standard and Guidelines.

NNHPD, 2018. Conference call between NNHPD, USEPA, and Sadie Hoskie. June 8, 2018.

Nystedt, J., 2016. "Re: Navajo Nation AUM Environmental Response Trust--First Phase." E-mail Message to Justin Peterson (Stantec). November 07. (Included in Appendix E of this RSE report)

Scarborough, R.B., 1981. Radioactive Occurrences and Uranium Production in Arizona, Final Report. Arizona Bureau of Geology and Mineral Technology Geological Survey Branch, Tucson, Arizona. p. 155.

Schaetzl, R., and Thompson, M.L., 2015. Soils: Genesis and geomorphology. 2nd ed. Cambridge Univ. Press, Cambridge, UK.

Stantec Consulting Services Inc. (Stantec), 2017. Boyd Tisi No.2 Western Site Baseline Studies Field Report. May.

Ulrich, G.E., Billingsley, R.H., Wolfe, E.W., Nealey, L.D., and Sutton, R.L., 1984. Geologic Map: Map Showing Geology, Structure, and Uranium Deposits of the Flagstaff 1°x2° Quadrangle, Arizona.

United States (US), 2015. Settlement Agreement between the United States of America and the Navajo Nation, April 8.

US Atomic Energy Commission (USAEC), 1972. Stratigraphy and Origin of the Chinle Formation and Related Upper Triassic Strata in the Colorado Plateau Region.

US Department of Agriculture (USDA), 1983. Soil Survey for Coconino County Area Arizona Central Part. U.S. Department of Agriculture, Soil Conservation Service. Washington, D.C.

US Environmental Protection Agency (USEPA), 1992. National Oil and Hazardous Substances Pollution Contingency Plan. Publication 9200.2-14. January.

USEPA, 2000. Multi-Agency Radiation Survey and Site Investigation Manual (MARSSIM), EPA 402-R-97-016, Rev. 1.

USEPA, 2002. Guidance on Environmental Data Verification and Data Validation. EPA QA/G-8, November.

USEPA, 2006. Guidance on Systematic Planning Using the Data Quality Objectives Process, EPA/240/B- 06/001, February.

USEPA, 2007a. Abandoned Uranium Mines and the Navajo Nation. Navajo Nation AUM Screening Assessment Report and Atlas with Geospatial Data. Prepared for U.S. Environmental Agency, Region 9 through an Interagency Agreement with U.S. Army Corps of Engineers. Prepared by

TerraSpectra Geomatics in cooperation with Navajo Nation Environmental Protection Agency and Navajo Abandoned Mine Lands Reclamation Program. August.

USEPA, 2007b. Technologically Enhanced Naturally Occurring Radioactive Materials From Uranium Mining, Volumes I and II (EPA 402-R-05-007).

USEPA, 2013. Federal Actions to Address Impacts of Uranium Contamination in the Navajo Nation – Five Year Plan Summary Report, January.

USEPA, 2015. ProUCL Version 5.1 Technical Guide, Statistical Software for Environmental Applications for Data Sets with and without Nondetect Observations, September. https://www.epa.gov/sites/production/files/2016-05/documents/proucl_5.1_tech-guide.pdf

USEPA, 2016. ProUCL 5.1.00 Software.

USEPA, 2017. Technologically Enhanced Naturally Occurring Radioactive Materials (TENORM). [Webpage] located at https://www.epa.gov/radiation/technologically-enhanced-naturally-occurring-radioactive-materials-tenorm. Accessed July19, 2017

US Fish and Wildlife Service (USFWS). 1996. Guidelines for Conducting and Reporting Botanical Inventories for Federally Listed, Proposed, and Candidate Plants. Sacramento Fish and Wildlife Office, Sacramento, California.

USFWS, 1998. Final Endangered Species Act (ESA) Section 7 Consultation Handbook, March 1998. https://www.fws.gov/endangered/esalibrary/ pdf/esa_section7_handbook.pdf

USFWS, 2008. Birds of Conservation Concern 2008. United States Department of Interior, Fish and Wildlife Service, Division of Migratory Bird Management, Arlington, Virginia. 85 pp.

USGS, 1984. Element Concentrations in Soils and Other Surficial Materials of the Conterminous United States. US Geological Survey Professional Paper 1270.

USGS, 2003. Flow Origin, Drainage Area, and Hydrologic Characteristics for Headwater Streams in the Mountain top Coal-Mining Region of Southern West Virginia, 2000-01.

USGS, 2017a. [Webpage] located at https://geomaps.wr.usgs.gov/parks/province/coloplat.html. Accessed November 2017.

USGS, 2017b. EarthExplorer [Webpage] located at https://earthexplorer.usgs.gov/. Accessed January 2017.

USGS, 2017c. 10 meter National Elevation Dataset. Accessed October 2017.

Western Regional Climate Center, 2017. [Webpage] located at http://www.wrcc.dri.edu/cgi-bin/cliMAIN.pl?az1634. Accessed 2017 January 23.

Weston Solutions, Inc., 2011. Navajo Abandoned Uranium Mine Site Screen Report for Boyd Tisi No. 2 Western. January.

World Heritage Encyclopedia, 2017. [Webpage] located at http://www.worldheritage.org/article/WHEBN0014241395/Mineralization%20(geology) Accessed December 28, 2017.

TABLES

Table 3-1
Identified Potential Water Features
Boyd Tisi No. 2
Removal Site Evaluation Report - Final
Navajo Nation AUM Environmental Response Trust - First Phase

Identified Water Feature	Source of Identified Water Feature	Water Feature Identification	Field Personnel Observations
Test Hole	NNDWR	RAR MET TH	No water well was observed at this location
Exploration Well	NNDWR	CAM FP 1	No water well was observed at this location
Water Well	NNDWR	CAM FP 2	No water well was observed at this location
Surface Water[1]	2007 AUM Atlas[2]	Yazzie No. 312	No water well or surface water feature was observed at this location
Surface Water[1]	2007 AUM Atlas[2]	CT980722CAM002	No water well or surface water feature was observed at this location
Water Well[1]	Stantec/Trustee	S135-Well-1	Water well was closed and locked and observed within the boundaries of AUM #134. The water well was not sampled per discussion with the USEPA due to the lock on the well and its location.

Notes
AUM - abandoned uranium mine
NNDWR - Navajo Nation Department of Water Resources
[1] Feature type is an estimation based on location and field observation
[2] USEPA, 2007a

Table 3-2
Soil and Sediment Sampling Summary
Boyd Tisi No. 2
Removal Site Evaluation Report - Final
Navajo Nation AUM Environmental Response Trust - First Phase

Sample Location	Sample Depth (ft bgs)	Sample Media	Sample Category	Sample Collection Method	Survey Area	Sample Date	Easting [1]	Northing [1]	Sample Types: Metals, Total	Sample Types: Ra-226	Sample Types: Thorium
Background Reference Area Study - Background Area 3											
S135-BG3-001	0 - 0.5	residual soil	SF	grab	NA	3/17/2017	466717.66	3969087.22	N	N	--
S135-BG3-002	0 - 0.5	residual soil	SF	grab	NA	3/17/2017	466717.15	3969089.04	N;MS;MSD	N	--
S135-BG3-003	0 - 0.5	residual soil	SF	grab	NA	3/17/2017	466718.52	3969091.02	N	N	--
S135-BG3-004	0 - 0.5	residual soil	SF	grab	NA	3/17/2017	466720.48	3969089.51	N;FD	N;FD	--
S135-BG3-005	0 - 0.5	residual soil	SF	grab	NA	3/17/2017	466720.54	3969087.31	N	N	--
S135-BG3-006	0 - 0.5	residual soil	SF	grab	NA	3/17/2017	466722.93	3969087.17	N;MS;MSD	N	--
S135-BG3-007	0 - 0.5	residual soil	SF	grab	NA	3/17/2017	466723.77	3969085.83	N;FD	N;FD	--
S135-BG3-008	0 - 0.5	residual soil	SF	grab	NA	3/17/2017	466722.11	3969084.38	N	N	--
S135-BG3-009	0 - 0.5	residual soil	SF	grab	NA	3/17/2017	466720.02	3969085.19	N	N	--
S135-BG3-010	0 - 0.5	residual soil	SF	grab	NA	3/17/2017	466719.80	3969086.14	N	N	--
S135-BG3-011	0 - 0.5	residual soil / highly weathered bedrock	SF	grab	NA	3/17/2017	466719.60	3969087.29	N	N	--
S135-BG3-011	0.5 - 0.9	residual soil / highly weathered bedrock	SB	grab	NA	3/17/2017	466719.60	3969087.29	N	N	--
Correlation											
S135-C01-001	0 - 0.5	soil	SF	5-point composite	NA	10/26/2016	466575.23	3968791.78	--	N;FD	N;FD
S135-C02-001	0 - 0.5	soil	SF	5-point composite	NA	10/26/2016	466581.23	3968801.69	--	N	N
S135-C03-001	0 - 0.5	soil	SF	5-point composite	NA	10/26/2016	466589.50	3968820.17	--	N	N
S135-C04-001	0 - 0.5	soil	SF	5-point composite	NA	10/26/2016	466689.92	3968819.07	--	N	N
S135-C05-001	0 - 0.5	sediment	SF	5-point composite	NA	10/26/2016	466680.38	3968904.19	--	N	N
Characterization											
S135-CX-001	0 - 0.5	soil	SF	grab	Site Survey Area	10/26/2016	466550.63	3968783.51	N	N	--
S135-CX-002	0 - 0.5	soil	SF	grab	Site Survey Area	10/26/2016	466575.18	3968791.93	N	N	--
S135-CX-003	0 - 0.5	soil	SF	grab	Site Survey Area	10/26/2016	466581.13	3968801.89	N	N	--
S135-CX-004	0 - 0.5	soil	SF	grab	Site Survey Area	10/26/2016	466589.42	3968820.26	N	N	--
S135-CX-005	0 - 0.5	soil	SF	grab	Site Survey Area	10/26/2016	466547.16	3968836.64	N	N	--
S135-CX-006	0 - 0.5	soil	SF	grab	Site Survey Area	10/26/2016	466539.21	3968859.69	N;FD	N;FD	--
S135-CX-007	0 - 0.5	soil	SF	grab	Site Survey Area	10/26/2016	466690.00	3968819.18	N	N	--
S135-CX-008	0 - 0.5	sediment	SF	grab	Site Survey Area	10/26/2016	466680.72	3968904.29	N	N	--
S135-CX-009	0 - 0.5	soil	SF	grab	Site Survey Area	10/26/2016	466725.96	3968774.42	N	N	--
S135-CX-010	0 - 0.5	soil	SF	grab	Site Survey Area	10/26/2016	466648.82	3968715.83	N	N	--
S135-SCX-003	0 - 0.25	soil	SF	grab	Site Survey Area	10/26/2016	466589.55	3968828.35	N	N	--
S135-SCX-004	0 - 0.5	soil	SF	grab	Site Survey Area	10/26/2016	466569.63	3968796.13	N	N	--
S135-SCX-004	0.5 - 1	soil	SB	grab	Site Survey Area	10/26/2016	466569.63	3968796.13	N	N	--
S135-SCX-005	0 - 0.5	soil	SF	grab	Site Survey Area	10/26/2016	466551.83	3968806.82	N	N	--
S135-SCX-005	0.5 - 1.16	soil	SB	grab	Site Survey Area	10/26/2016	466551.83	3968806.82	N	N	--
S135-SCX-006	0 - 0.5	soil	SF	grab	Site Survey Area	11/11/2016	466692.82	3968852.05	N	N	--
S135-SCX-006	1 - 23	soil/bedrock	SB	composite	Site Survey Area	11/12/2016	466692.82	3968852.05	N	N	--
S135-SCX-007	0 - 0.5	soil	SF	grab	Site Survey Area	11/12/2016	466691.01	3968819.99	N	N	--
S135-SCX-007	1 - 9	soil/bedrock	SB	composite	Site Survey Area	11/12/2016	466691.01	3968819.99	N	N	--
S135-SCX-007	7 - 8	bedrock	SB	grab	Site Survey Area	11/12/2016	466691.01	3968819.99	N	N	--
S135-SCX-007	9 - 10	bedrock	SB	grab	Site Survey Area	11/12/2016	466691.01	3968819.99	N	N	--
S135-SCX-009	0 - 0.5	soil	SF	grab	Site Survey Area	11/12/2016	466651.49	3968849.53	N	N	--
S135-SCX-009	1 - 7	soil/bedrock	SB	composite	Site Survey Area	11/12/2016	466651.49	3968849.53	N	N	--
S135-SCX-010	0 - 0.5	soil	SF	grab	Site Survey Area	11/12/2016	466609.86	3968843.76	N	N	--
S135-SCX-010	1 - 3.5	bedrock	SB	composite	Site Survey Area	11/12/2016	466609.86	3968843.76	N	N	--
S135-SCX-010	4 - 4.5	bedrock	SB	grab	Site Survey Area	11/12/2016	466609.86	3968843.76	N	N	--
S135-SCX-011	0 - 0.5	soil	SF	grab	Site Survey Area	11/12/2016	466566.73	3968786.55	N	N	--
S135-SCX-011	1 - 4	soil/bedrock	SB	composite	Site Survey Area	11/12/2016	466566.73	3968786.55	N	N	--
S135-SCX-011	4 - 4.5	bedrock	SB	grab	Site Survey Area	11/12/2016	466566.73	3968786.55	N	N	--
S135-SCX-012	0 - 0.5	soil	SF	grab	Site Survey Area	11/12/2016	466579.14	3968796.33	N	N	--
S135-SCX-012	0.5 - 4	soil/bedrock	SB	composite	Site Survey Area	11/12/2016	466579.14	3968796.33	N	N	--
S135-SCX-012	0.8 - 1	soil	SB	grab	Site Survey Area	11/12/2016	466579.14	3968796.33	N	N	--
S135-SCX-012	4 - 4.5	bedrock	SB	grab	Site Survey Area	11/12/2016	466579.14	3968796.33	N	N	--
S135-SCX-013	0 - 0.5	soil	SF	grab	Site Survey Area	11/13/2016	466600.95	3968759.32	N	N	--
S135-SCX-013	0.5 - 4	soil/bedrock	SB	composite	Site Survey Area	11/13/2016	466600.95	3968759.32	N	N	--
S135-SCX-013	4 - 4.5	bedrock	SB	grab	Site Survey Area	11/13/2016	466600.95	3968759.32	N;FD	N;FD	--
S135-SCX-014	0 - 0.5	soil	SF	grab	Site Survey Area	11/13/2016	466633.87	3968788.82	N	N	--
S135-SCX-014	0.5 - 3.5	soil/bedrock	SB	composite	Site Survey Area	11/13/2016	466633.87	3968788.82	N	N	--
S135-SCX-014	3.5 - 4	bedrock	SB	grab	Site Survey Area	11/13/2016	466633.87	3968788.82	N;FD	N;FD	--
S135-SCX-015	0 - 0.5	soil	SF	grab	Site Survey Area	11/13/2016	466544.21	3968809.18	N;FD	N;FD	--
S135-SCX-015	0.5 - 4.5	soil/bedrock	SB	composite	Site Survey Area	11/13/2016	466544.21	3968809.18	N	N	--
S135-SCX-016	0 - 1.5	soil	SB	composite	Site Survey Area	11/13/2016	466703.62	3968871.14	N;MS;MSD	N	--
S135-SCX-016	1.5 - 4.5	soil/bedrock	SB	composite	Site Survey Area	11/13/2016	466703.62	3968871.14	N	N	--

Notes

--	Not Sampled
N	Normal
FD	Field Duplicate
MS	Matrix Spike
MSD	Matrix Spike Duplicate
NA	Not Applicable
Ra-226	Radium 226
SB	Subsurface Sample
SF	Surface Sample
ft bgs	feet below ground surface

[1] Coordinate System: NAD 1983 UTM Zone 12N

Stantec

NAVAJO NATION
AUM Environmental Response Trust - First Phase

Table 3-3
Mine Feature Samples and Area
Boyd Tisi No.2
Removal Site Evaluation Report - Final
Navajo Nation AUM Environmental Response Trust - First Phase

Mine Feature	Surface Samples	Subsurface Samples	Area (sq. ft)	Volume of TENORM exceeding ILs (yd^3)
Reclaimed (East)	6	6	88,113	1,364
Reclaimed (West)	7	7	21,440	967
Historical Waste Pile 1 (WP1)	1	1	8,758	*
Historical Waste Pile 2 (WP2)	0	0	12,099	*
Historical Waste Pile 3 (WP3)	0	0	15,237	--
Historical Waste Pile 4 (WP4)	1	1	22,406	--
Historical Waste Pile 5 (WP5)	5	6	10,939	602
Historical Pit	4	4	20,228	464
Potential Haul Road	0	0	**	87
Drainages	0	0	***	--
Debris	0	0	1,552	--

Notes

sq.ft - square feet

yd^3 - cubic yards

ILs - investigation levels

TENORM - technologically enhanced naturally occurring radioactive material

* Discrete TENORM volume was not calculated for feature

** Area not determined because the width of the potential haul road varies

*** Area not determined because the width of the drainages vary throughout the Site

-- Feature is not included in area of TENORM exceeding ILs

Table 4-1
Background Reference Area Soil Sample Analytical Results
Boyd Tisi No. 2
Removal Site Evaluation Report - Final
Navajo Nation AUM Environmental Response Trust - First Phase

Location Identification	S135-BG3-001	S135-BG3-002	S135-BG3-003	S135-BG3-004	S135-BG3-004 Dup	S135-BG3-005	S135-BG3-006	S135-BG3-007	S135-BG3-007 Dup	S135-BG3-008	S135-BG3-009
Date Collected	3/17/2017	3/17/2017	3/17/2017	3/17/2017	3/17/2017	3/17/2017	3/17/2017	3/17/2017	3/17/2017	3/17/2017	3/17/2017
Depth (feet)	0 - 0.5	0 - 0.5	0 - 0.5	0 - 0.5	0 - 0.5	0 - 0.5	0 - 0.5	0 - 0.5	0 - 0.5	0 - 0.5	0 - 0.5
Analyte (Units)											
Metals[1] (mg/kg)											
Arsenic	1.3	0.88	2.5	0.6	0.59	0.57	0.67	0.69	0.66	0.62	0.7
Molybdenum	<0.2	<0.2	<0.2	0.25	0.26	0.31	0.28	0.38	0.33	0.24	0.22
Selenium	<0.99	<1	<1	<0.94	<0.96	<1	<1	<0.99	<0.96	<0.96	<0.98
Uranium	3.3	4.8	2.9	7.7	7.6	3	1.3	1.1	1.1	3.2	5
Vanadium	43	35	48	36	35	39	31	39	36	30	36
Radionuclides (pCi/g)											
Radium-226	3.15 ± 0.48	1.79 ± 0.34	5.45 ± 0.73	1.11 ± 0.28	0.93 ± 0.27	1.1 ± 0.27	1.14 ± 0.29	1.09 ± 0.27	1.43 ± 0.3	1.42 ± 0.31	1.24 ± 0.29

Notes
Bold Bolded result indicates positively identified compound
mg/kg milligrams per kilogram
pCi/g picocuries per gram
[1] Analysis required a standard sample dilution of 10 times; reported values have been converted to non-dilute value
< Result not detected above associated laboratory reporting limit

Table 4-1
Background Reference Area Soil Sample Analytical Results
Boyd Tisi No. 2
Removal Site Evaluation Report - Final
Navajo Nation AUM Environmental Response Trust - First Phase

Location Identification	S135-BG3-010	S135-BG3-011	S135-BG3-011
Date Collected	3/17/2017	3/17/2017	3/17/2017
Depth (feet)	0 - 0.5	0 - 0.5	0.5 - 0.9
Analyte (Units)			
Metals[1] (mg/kg)			
Arsenic	0.55	0.67	0.37
Molybdenum	0.55	0.36	0.39
Selenium	<1	<1	<0.97
Uranium	29	8.2	2.1
Vanadium	35	35	36
Radionuclides (pCi/g)			
Radium-226	5.01 ± 0.7	1.3 ± 0.3	1.08 ± 0.29

Notes

Bold	Bolded result indicates positively identified compound
mg/kg	milligrams per kilogram
pCi/g	picocuries per gram
[1]	Analysis required a standard sample dilution of 10 times; reported values have been converted to non-dilute value
<	Result not detected above associated laboratory reporting limit

Table 4-2
Static Gamma Measurement Summary
Boyd Tisi No. 2
Removal Site Evaluation Report - Final
Navajo Nation AUM Environmental Response Trust - First Phase

Sample Location	Survey Area	Subsurface Static Gamma Investigation Level (cpm)	Sample Depth (ft bgs)	Media	Static Gamma Measurement (cpm)
S135-BG3-011	Background Area 3	*	0.5	residual soil / highly weathered bedrock	22,404
S135-BG3-011	Background Area 3	*	0.9	residual soil / highly weathered bedrock	25,356**
S135-SCX-003	Site Survey Area	22,404	0.25	soil	47,000
S135-SCX-004	Site Survey Area	--	0	soil	59,801
S135-SCX-004	Site Survey Area	22,404	0.5	soil	129,653
S135-SCX-004	Site Survey Area	22,404	1	soil	87,713
S135-SCX-005	Site Survey Area	--	0	soil	11,037
S135-SCX-005	Site Survey Area	22,404	0.5	soil	14,675
S135-SCX-006	Site Survey Area	22,404	1.5	soil	12,578
S135-SCX-006	Site Survey Area	22,404	2.5	soil	15,102
S135-SCX-006	Site Survey Area	22,404	3.5	bedrock	19,474
S135-SCX-006	Site Survey Area	22,404	4.5	bedrock	19,696
S135-SCX-006	Site Survey Area	22,404	5.5	bedrock	19,784
S135-SCX-006	Site Survey Area	22,404	6.5	bedrock	21,028
S135-SCX-006	Site Survey Area	22,404	7.5	bedrock	21,204
S135-SCX-006	Site Survey Area	22,404	8.5	bedrock	20,928
S135-SCX-006	Site Survey Area	22,404	9.5	bedrock	17,088
S135-SCX-006	Site Survey Area	22,404	10.5	bedrock	15,872
S135-SCX-006	Site Survey Area	22,404	11.5	bedrock	15,980
S135-SCX-006	Site Survey Area	22,404	12.5	bedrock	15,000
S135-SCX-006	Site Survey Area	22,404	13.5	bedrock	15,138
S135-SCX-006	Site Survey Area	22,404	14.5	bedrock	15,402
S135-SCX-006	Site Survey Area	22,404	15.5	bedrock	15,640
S135-SCX-006	Site Survey Area	22,404	16.5	bedrock	15,040
S135-SCX-006	Site Survey Area	22,404	17.5	bedrock	14,966
S135-SCX-006	Site Survey Area	22,404	18.5	bedrock	14,482
S135-SCX-006	Site Survey Area	22,404	19.5	bedrock	14,380
S135-SCX-006	Site Survey Area	22,404	20.5	bedrock	14,148
S135-SCX-006	Site Survey Area	22,404	21.5	bedrock	14,916
S135-SCX-006	Site Survey Area	22,404	22.5	bedrock	17,172
S135-SCX-006	Site Survey Area	22,404	23.5	bedrock	19,466

Notes

Bold	Bolded result indicates measurement exceeds subsurface gamma investigation level
*	The subsurface gamma investigation levels are derived from the background area measurements, refer to Section 4.1 of the RSE report
**	Measurement collected at interface of unconsolidated material and refusal material (e.g., bedrock)
--	The subsurface gamma investigation level does not apply to surface static gamma measurements
IL	Investigation Level
RSE	Removal Site Investigation
cpm	counts per minute
ft bgs	feet below ground surface
1	Gamma measurements are estimated based on collecting the measurements over a shorter period of time within this borehole. Gamma measurements in all other boreholes were collected over longer time intervals, which provided more precise measurements.

Table 4-2
Static Gamma Measurement Summary
Boyd Tisi No. 2
Removal Site Evaluation Report - Final
Navajo Nation AUM Environmental Response Trust - First Phase

Sample Location	Survey Area	Subsurface Static Gamma Investigation Level (cpm)	Sample Depth (ft bgs)	Media	Static Gamma Measurement (cpm)
S135-SCX-007	Site Survey Area	22,404	4.5	bedrock	29,618
S135-SCX-007	Site Survey Area	22,404	5.5	bedrock	63,980
S135-SCX-007	Site Survey Area	22,404	6.5	bedrock	366,224
S135-SCX-007	Site Survey Area	22,404	7.5	bedrock	128,984
S135-SCX-007	Site Survey Area	22,404	8.5	bedrock	100,024
S135-SCX-007	Site Survey Area	22,404	9.5	bedrock	84,986
S135-SCX-008	Site Survey Area	22,404	0.5	soil	34,980
S135-SCX-008	Site Survey Area	22,404	1.5	soil	25,316
S135-SCX-008	Site Survey Area	22,404	2.5	bedrock	22,032
S135-SCX-008	Site Survey Area	22,404	3.5	bedrock	18,558
S135-SCX-008	Site Survey Area	22,404	4.5	bedrock	17,786
S135-SCX-009	Site Survey Area	22,404	0.1	soil	14,890
S135-SCX-009	Site Survey Area	22,404	1.1	soil	18,788
S135-SCX-009	Site Survey Area	22,404	2.1	soil	19,308
S135-SCX-009	Site Survey Area	22,404	3.1	soil	20,276
S135-SCX-009	Site Survey Area	22,404	4.1	bedrock	20,432
S135-SCX-009	Site Survey Area	22,404	5.1	bedrock	18,744
S135-SCX-009	Site Survey Area	22,404	6.1	bedrock	14,588
S135-SCX-009	Site Survey Area	22,404	7.1	bedrock	14,106
S135-SCX-010	Site Survey Area	22,404	0.6	soil	12,670
S135-SCX-010	Site Survey Area	22,404	1.6	bedrock	16,666
S135-SCX-010	Site Survey Area	22,404	2.6	bedrock	13,368
S135-SCX-010	Site Survey Area	22,404	3.6	bedrock	12,196
S135-SCX-010	Site Survey Area	22,404	4.6	bedrock	11,390
S135-SCX-011	Site Survey Area	22,404	0.1	soil	35,608
S135-SCX-011	Site Survey Area	22,404	1.1	soil	23,810
S135-SCX-011	Site Survey Area	22,404	2.1	bedrock	13,966
S135-SCX-011	Site Survey Area	22,404	3.1	bedrock	13,138
S135-SCX-012	Site Survey Area	22,404	0.1	soil	263,646
S135-SCX-012	Site Survey Area	22,404	1.1	soil	52,950
S135-SCX-012	Site Survey Area	22,404	2.1	soil	17,630
S135-SCX-012	Site Survey Area	22,404	3.1	bedrock	14,294
S135-SCX-012	Site Survey Area	22,404	4.1	bedrock	21,486

Notes

Bold	Bolded result indicates measurement exceeds subsurface gamma investigation level
*	The subsurface gamma investigation levels are derived from the background area measurements, refer to Section 4.1 of the RSE report
**	Measurement collected at interface of unconsolidated material and refusal material (e.g., bedrock)
--	The subsurface gamma investigation level does not apply to surface static gamma measurements
IL	Investigation Level
RSE	Removal Site Investigation
cpm	counts per minute
ft bgs	feet below ground surface
1	Gamma measurements are estimated based on collecting the measurements over a shorter period of time within this borehole. Gamma measurements in all other boreholes were collected over longer time intervals, which provided more precise measurements.

Table 4-2
Static Gamma Measurement Summary
Boyd Tisi No. 2
Removal Site Evaluation Report - Final
Navajo Nation AUM Environmental Response Trust - First Phase

Sample Location	Survey Area	Subsurface Static Gamma Investigation Level (cpm)	Sample Depth (ft bgs)	Media	Static Gamma Measurement (cpm)
S135-SCX-013	Site Survey Area	22,404	0.5	soil	13,332
S135-SCX-013	Site Survey Area	22,404	1.5	soil	12,348
S135-SCX-013	Site Survey Area	22,404	2.5	bedrock	12,976
S135-SCX-013	Site Survey Area	22,404	3.5	bedrock	11,628
S135-SCX-014	Site Survey Area	22,404	1.1	soil	14,240
S135-SCX-014	Site Survey Area	22,404	2.1	soil	13,900
S135-SCX-014	Site Survey Area	22,404	3.1	bedrock	12,174
S135-SCX-014	Site Survey Area	22,404	4.1	bedrock	11,650
S135-SCX-015	Site Survey Area	22,404	0.5	soil	13,330
S135-SCX-015	Site Survey Area	22,404	1.5	soil	14,178
S135-SCX-015	Site Survey Area	22,404	2.5	soil	12,386
S135-SCX-015	Site Survey Area	22,404	3.5	bedrock	11,376
S135-SCX-016	Site Survey Area	22,404	0.7	soil	18,132
S135-SCX-016	Site Survey Area	22,404	1.7	soil	18,958
S135-SCX-016	Site Survey Area	22,404	2.7	bedrock	20,322
S135-SCX-016	Site Survey Area	22,404	3.7	bedrock	20,086
S135-SCX-016	Site Survey Area	22,404	4.6	bedrock	20,628
S135-SCX-017	Site Survey Area	22,404	0.5	soil	15,004
S135-SCX-017	Site Survey Area	22,404	1.5	soil	16,332
S135-SCX-017	Site Survey Area	22,404	2.5	bedrock	18,548
S135-SCX-017	Site Survey Area	22,404	3.5	bedrock	18,886
S135-SCX-017	Site Survey Area	22,404	4.5	bedrock	18,752
S135-SCX-017	Site Survey Area	22,404	5.5	bedrock	18,682
S135-SCX-017	Site Survey Area	22,404	6.5	bedrock	18,792
S135-SCX-017	Site Survey Area	22,404	7.5	bedrock	18,558
S135-SCX-017	Site Survey Area	22,404	8.5	bedrock	17,328
S135-SCX-017	Site Survey Area	22,404	9.1	bedrock	16,318
S135-SCX-018	Site Survey Area	--	0	sediment	9,747
S135-SCX-018	Site Survey Area	22,404	0.5	sediment	12,552
S135-SCX-018	Site Survey Area	22,404	1	sediment	12,820
S135-SCX-018	Site Survey Area	22,404	1.5	sediment	12,467
S135-SCX-018	Site Survey Area	22,404	2	sediment	12,561
S135-SCX-019	Site Survey Area	--	0	soil	13000 [1]
S135-SCX-019	Site Survey Area	22,404	0.5	soil	18000 [1]
S135-SCX-020	Site Survey Area	--	0	soil	11,558
S135-SCX-020	Site Survey Area	22,404	0.5	soil	12,291

Notes

Bold	Bolded result indicates measurement exceeds subsurface gamma investigation level
*	The subsurface gamma investigation levels are derived from the background area measurements, refer to Section 4.1 of the RSE report
**	Measurement collected at interface of unconsolidated material and refusal material (e.g., bedrock)
--	The subsurface gamma investigation level does not apply to surface static gamma measurements
IL	Investigation Level
RSE	Removal Site Investigation
cpm	counts per minute
ft bgs	feet below ground surface
1	Gamma measurements are estimated based on collecting the measurements over a shorter period of time within this borehole. Gamma measurements in all other boreholes were collected over longer time intervals, which provided more precise measurements.

Table 4-3
Gamma Correlation Study Soil and Sediment Sample Analytical Results
Boyd Tisi No. 2
Removal Site Evaluation Report - Final
Navajo Nation AUM Environmental Response Trust - First Phase

Location Identification	S135-C01-001 Dup	S135-C01-001	S135-C02-001	S135-C03-001	S135-C04-001	S135-C05-001
Date Collected	10/26/2016	10/26/2016	10/26/2016	10/26/2016	10/26/2016	10/26/2016
Depth (feet)	0 - 0.5	0 - 0.5	0 - 0.5	0 - 0.5	0 - 0.5	0 - 0.5
Analyte (Units)						
Radionuclides (pCi/g)						
Radium-226	11.9 ± 1.5	12.2 ± 1.6	2.02 ± 0.38	1.04 ± 0.24	0.98 ± 0.25	0.64 ± 0.2 J-
Thorium-228	0.72 ± 0.13	0.68 ± 0.13	0.71 ± 0.13	0.61 ± 0.12	0.94 ± 0.16	0.48 ± 0.1
Thorium-230	6.5 ± 1	5.7 ± 0.9	1.35 ± 0.23	0.85 ± 0.16	0.7 ± 0.13	0.71 ± 0.14
Thorium-232	0.77 ± 0.14	0.72 ± 0.13	0.71 ± 0.13	0.59 ± 0.11	0.83 ± 0.15	0.477 ± 0.095

Notes
Bold Bolded result indicates positively identified compound
pCi/g picocuries per gram
J- Data are estimated and are potentially biased low due to associated quality control data

Table 4-4
Site Characterization Soil and Sediment Sample Analytical Results
Boyd Tisi No. 2
Removal Site Evaluation Report - Final
Navajo Nation AUM Environmental Response Trust - First Phase

Location Identification		S135-CX-001	S135-CX-002	S135-CX-003	S135-CX-004	S135-CX-005	S135-CX-006	S135-CX-006 Dup	S135-CX-007	S135-CX-008	S135-CX-009	S135-CX-010	S135-SCX-003	S135-SCX-004	S135-SCX-004	S135-SCX-005	S135-SCX-005
Date Collected		10/26/2016	10/26/2016	10/26/2016	10/26/2016	10/26/2016	10/26/2016	10/26/2016	10/26/2016	10/26/2016	10/26/2016	10/26/2016	10/26/2016	10/26/2016	10/26/2016	10/26/2016	10/26/2016
Depth (feet)		0 - 0.5	0 - 0.5	0 - 0.5	0 - 0.5	0 - 0.5	0 - 0.5	0 - 0.5	0 - 0.5	0 - 0.5	0 - 0.5	0 - 0.5	0 - 0.25	0 - 0.5	0.5 - 1	0 - 0.5	0.5 - 1.16
Sample Category		surface	surface	surface	surface	surface	surface	surface	surface	surface	surface	surface	surface	surface	subsurface	surface	subsurface
Sample Collection Method		grab	grab	grab	grab	grab	grab	grab	grab	grab	grab	grab	grab	grab	grab	grab	grab
Media		soil	soil	soil	soil	soil	soil	soil	soil	sediment	soil	soil	soil	soil	soil	soil	soil
Analyte (Units)	Investigation Level																
Metals[1] (mg/kg)																	
Arsenic	2.51	1.6	1.9	7	0.84	0.84	0.89	1.2	0.73	0.83	1.1	1.4	2.6	3.9	2.1	1.4	1.3
Molybdenum	0.577	<0.2	0.22	3.8	0.27	<0.21	<0.21	<0.19	<0.2	<0.19	<0.21	<0.21	0.25	1.6	0.91	<0.18	<0.2
Selenium	NA	<1	<1	1.3	<0.9	<1.1	<1	<0.94	<1	<0.96	<1	<1	<1	<0.96	<0.97	<0.92	<0.98
Uranium	34.1	1	20	47	0.77	0.46	0.53	0.57	0.88	0.5	0.67	0.71	17	89	30	0.86	1
Vanadium	51.5	10	15	24	7.1	8.5	7.4	9.2	22	7.9	12	14	20	16	15	11	12
Radionuclides (pCi/g)																	
Radium-226	5.45	0.76 ± 0.23	21.1 ± 2.7	11 ± 1.4	0.61 ± 0.21	0.76 ± 0.26	0.57 ± 0.2	0.63 ± 0.19	1.28 ± 0.3	0.6 ± 0.22	0.86 ± 0.21	1.03 ± 0.28	9.7 ± 1.2	45.6 ± 5.4	13.9 ± 1.8 J-	1.02 ± 0.26	0.91 ± 0.26

Notes

Bold	Bolded result indicates positively identified compound
Shaded	Shaded result indicates result greater than or equal to the investigation level
Shaded	Shaded result indicates analyte detected, where that analyte does not have an investigation level
mg/kg	milligrams per kilogram
pCi/g	picocuries per gram
NA	An investigation level for selenium is not identified because selenium sample results in BG-3 were all non-detect
[1]	Analysis required a standard sample dilution of 10 times; reported values have been converted to non-dilute value
<	Result not detected above associated laboratory reporting limit
D	Analysis required non-standard dilution; reported values have been converted to non-dilute value
J	Data are estimated due to associated quality control data
J-	Data are estimated and are potentially biased low due to associated quality control data
J+	Data are estimated and are potentially biased high due to associated quality control data

Table 4-4
Site Characterization Soil and Sediment Sample Analytical Results
Boyd Tisi No. 2
Removal Site Evaluation Report - Final
Navajo Nation AUM Environmental Response Trust - First Phase

Location Identification		S135-SCX-006	S135-SCX-006	S135-SCX-007	S135-SCX-007	S135-SCX-007	S135-SCX-007	S135-SCX-009	S135-SCX-009	S135-SCX-010	S135-SCX-010	S135-SCX-010	S135-SCX-011	S135-SCX-011	S135-SCX-011	S135-SCX-012	S135-SCX-012	S135-SCX-012
Date Collected		11/11/2016	11/12/2016	11/12/2016	11/12/2016	11/12/2016	11/12/2016	11/12/2016	11/12/2016	11/12/2016	11/12/2016	11/12/2016	11/12/2016	11/12/2016	11/12/2016	11/12/2016	11/12/2016	11/12/2016
Depth (feet)		0 - 0.5	1 - 23	0 - 0.5	1 - 9	7 - 8	9 - 10	0 - 0.5	1 - 7	0 - 0.5	1 - 3.5	4 - 4.5	0 - 0.5	1 - 4	4 - 4.5	0 - 0.5	0.5 - 4	0.8 - 1
Sample Category		surface	subsurface	surface	subsurface	subsurface	subsurface	surface	subsurface	surface	subsurface	subsurface	surface	subsurface	subsurface	surface	subsurface	subsurface
Sample Collection Method		grab	composite	grab	composite	grab	grab	grab	composite	grab	composite	grab	grab	composite	grab	grab	composite	grab
Media		soil	soil/bedrock	soil	soil/bedrock	bedrock	bedrock	soil	soil/bedrock	soil	bedrock	bedrock	soil	soil/bedrock	bedrock	soil	soil/bedrock	soil
Analyte (Units)	Investigation Level																	
Metals[1] (mg/kg)																		
Arsenic	2.51	0.78	0.99	0.61	1.6	2	1.2	0.83	0.93	1	1.3	1.2	3.1	1.2	2.3	3.1	6.8	69
Molybdenum	0.577	<0.2	0.53	<0.19	0.86	2	0.71	<0.2	<0.2	<0.19	<0.2	0.27	0.57	0.39	0.23	2	4.9	65
Selenium	NA	<0.98	<0.99	<0.97	<1	<1	<0.94	<1	<0.99	<0.95	<0.98	<1	<0.99	<1	<0.94	<1	<1	<1
Uranium	34.1	0.38	0.72	1	18	25	21	1.1	0.42	1.1	1.2	0.63	22	3.4	1.3	54	130 D	1400 D
Vanadium	51.5	6.3	9.2	18	15	18	10	11	7.6	7	8	7.5	12	9.6	37	11	11	23
Radionuclides (pCi/g)																		
Radium-226	5.45	0.78 ± 0.21	1.07 ± 0.23	1.21 ± 0.25 J-	9.3 ± 1.2	10.3 ± 1.4 J	6.02 ± 0.82	1.71 ± 0.37	0.84 ± 0.21 J-	1.24 ± 0.27	0.8 ± 0.19 J-	0.61 ± 0.2 J-	13 ± 1.6 J-	8.2 ± 1 J-	0.81 ± 0.21 J-	29.2 ± 3.5	71.4 ± 8.5 J-	1310 ± 150

Notes
Bold Bolded result indicates positively identified compound
Shaded Shaded result indicates result greater than or equal to the investigation level
Shaded Shaded result indicates analyte detected, where that analyte does not have an investigation level
mg/kg milligrams per kilogram
pCi/g picocuries per gram
NA An investigation level for selenium is not identified because selenium sample results in BG-3 were all non-detect
[1] Analysis required a standard sample dilution of 10 times; reported values have been converted to non-dilute value
< Result not detected above associated laboratory reporting limit
D Analysis required non-standard dilution; reported values have been converted to non-dilute value
J Data are estimated due to associated quality control data
J- Data are estimated and are potentially biased low due to associated quality control data
J+ Data are estimated and are potentially biased high due to associated quality control data

Table 4-4
Site Characterization Soil and Sediment Sample Analytical Results
Boyd Tisi No. 2
Removal Site Evaluation Report - Final
Navajo Nation AUM Environmental Response Trust - First Phase

Location Identification		S135-SCX-012	S135-SCX-013	S135-SCX-013	S135-SCX-013	S135-SCX-013 Dup	S135-SCX-014	S135-SCX-014	S135-SCX-014	S135-SCX-014 Dup	S135-SCX-015	S135-SCX-015	S135-SCX-015 Dup	S135-SCX-016	S135-SCX-016
Date Collected		11/12/2016	11/13/2016	11/13/2016	11/13/2016	11/13/2016	11/13/2016	11/13/2016	11/13/2016	11/13/2016	11/13/2016	11/13/2016	11/13/2016	11/13/2016	11/13/2016
Depth (feet)		4 - 4.5	0 - 0.5	0.5 - 4	4 - 4.5	4 - 4.5	0 - 0.5	0.5 - 3.5	3.5 - 4	3.5 - 4	0 - 0.5	0.5 - 4.5	0 - 0.5	0 - 1.5	1.5 - 4.5
Sample Category		subsurface	surface	subsurface	subsurface	subsurface	surface	subsurface	subsurface	subsurface	surface	subsurface	surface	surface	subsurface
Sample Collection Method		grab	grab	composite	grab	grab	grab	composite	grab	grab	grab	composite	grab	composite	composite
Media		bedrock	soil	soil/bedrock	bedrock	bedrock	soil	soil/bedrock	bedrock	bedrock	soil	soil/bedrock	soil/bedrock	soil	soil/bedrock
Analyte (Units)	Investigation Level														
Metals[1] (mg/kg)															
Arsenic	2.51	2	1.2	1.1	2	1.4	1.1	1.2	1.7	1.9	1.2	0.94	1.2	0.72	1
Molybdenum	0.577	0.72	<0.2	<0.2	<0.2	<0.2	<0.2	<0.2	<0.19	<0.2	<0.21	<0.19	<0.19	<0.2	0.63
Selenium	NA	<1	<1	<0.98	<0.99	<1	<1	<0.99	<0.95	<1	<1	<0.95	<0.97	<1	<1
Uranium	34.1	1.3	4.7	0.73	0.79	1	2.6	0.75	1.1	1.3	0.59	0.53	0.66	0.65 J	1.4
Vanadium	51.5	13	9.4	9.5	10	7.9	8.6	8.5	14	8.6	8.6	9.1	9.2	29 J-	22
Radionuclides (pCi/g)															
Radium-226	5.45	0.63 ± 0.21 J-	2.7 ± 0.47	0.73 ± 0.18 J-	0.62 ± 0.18 J-	1.24 ± 0.31 J+	1.96 ± 0.34	0.74 ± 0.22	0.72 ± 0.21 J-	0.67 ± 0.19 J-	0.73 ± 0.23	0.56 ± 0.18	0.72 ± 0.25	0.68 ± 0.23	0.73 ± 0.22 J-

Notes
Bold Bolded result indicates positively identified compound
Shaded Shaded result indicates result greater than or equal to the investigation level
Shaded Shaded result indicates analyte detected, where that analyte does not have an investigation level
mg/kg milligrams per kilogram
pCi/g picocuries per gram
NA An investigation level for selenium is not identified because selenium sample results in BG-3 were all non-detect
[1] Analysis required a standard sample dilution of 10 times; reported values have been converted to non-dilute value
< Result not detected above associated laboratory reporting limit
D Analysis required non-standard dilution; reported values have been converted to non-dilute value
J Data are estimated due to associated quality control data
J- Data are estimated and are potentially biased low due to associated quality control data
J+ Data are estimated and are potentially biased high due to associated quality control data

Table 4-5
Summary of Investigation Level Exceedances in Soil/Sediment at Borehole Locations
Boyd Tisi No. 2
Removal Site Evaluation Report - Final
Navajo Nation AUM Environmental Response Trust - First Phase

Sample Location	Investigation Level Exceedances
S135-SCX-004	As, Mo, Ra-226, U, Static Gamma
S135-SCX-007	Mo, Ra-226, Static Gamma
S135-SCX-008	Static Gamma[1]
S135-SCX-011	As, Ra-226, Static Gamma
S135-SCX-012	As, Mo, Ra-226, U, Static Gamma
S135-SCX-016	Mo

Notes
1 - no soil samples collected in borehole
As - Arsenic
Mo - Molybdenum
Ra-226 - Radium 226
U - Uranium

FIGURES

FIGURE ACRONYMS/ABBREVIATIONS

As	arsenic
BG	potential background reference area
bgs	below ground surface
cpm	counts per minute
ft	feet
IL	investigation level
mg/kg	milligrams per kilogram
Mo	molybdenum
NA	not applicable
NAD	North American Datum
pCi/g	picocuries per gram
Ra	radium-226
Ra-226	radium-226
Se	selenium
TENORM	Technologically Enhanced Naturally Occurring Radioactive Materials
uk	unknown
U	uranium
UTL	upper tolerance limit
UTM	Universal Transverse Mercator
V	vanadium

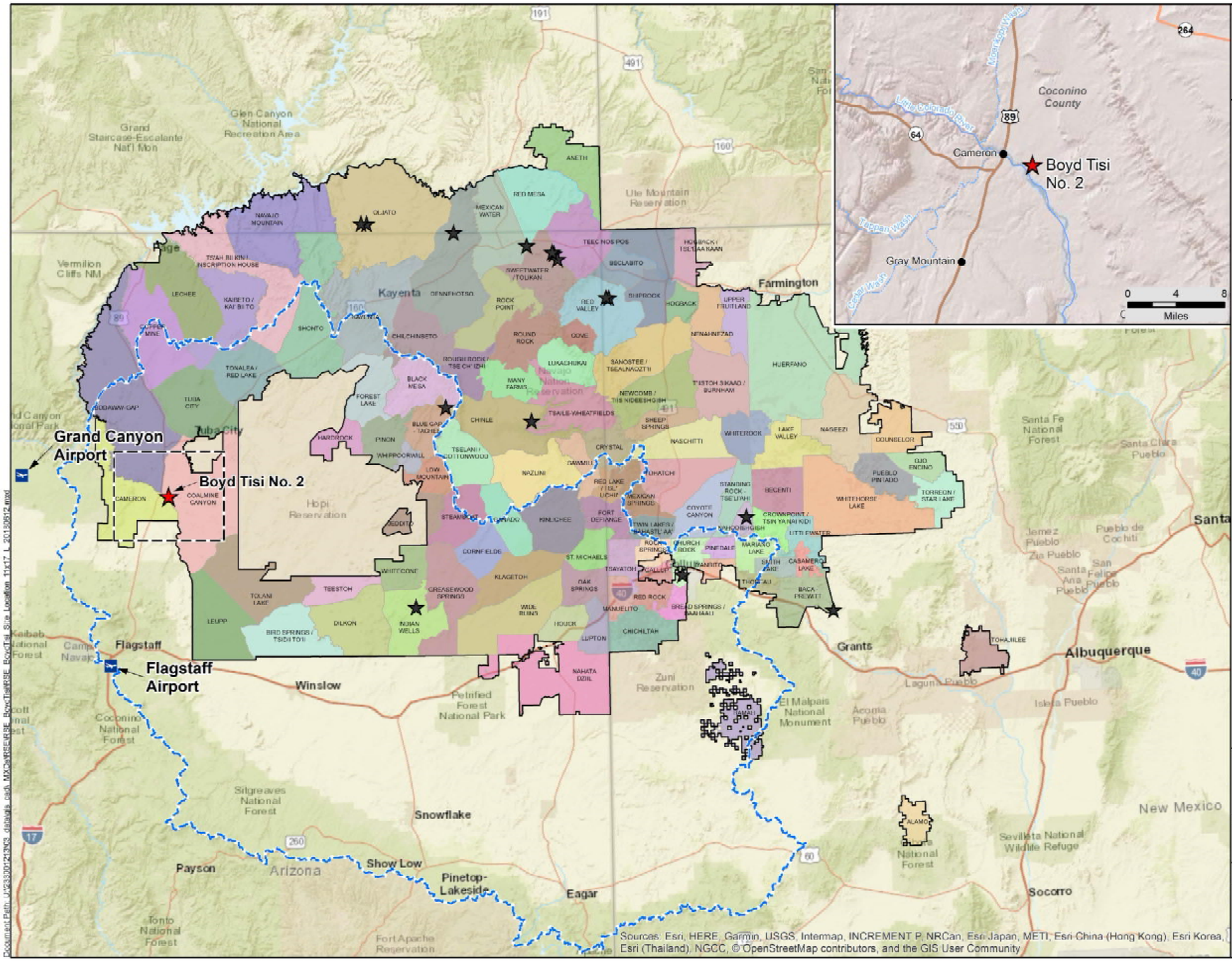

NAVAJO NATION
AUM Environmental Response Trust-First Phase

LEGEND

- Boyd Tisi No. 2 Mine Site
- Priority Abandoned Uranium Mine (AUM) Site
- Populated Place
- US Highway
- State Highway
- Stream
- Intermittent Stream
- Little Colorado River Valley Watershed
- Navajo Nation Boundary
- Navajo Nation Chapter

Grand Canyon Airport, Arizona Wind Rose (KGCN), 1996-2006

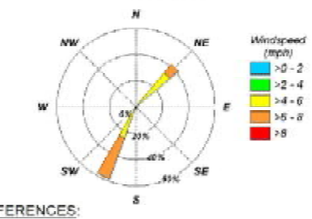

REFERENCES:

Coordinate System: NAD 1983 UTM Zone 12N

Basemap: ESRI World Street Map and World Shaded Relief accessed 06/2018.

Wind Rose: USEPA, 2007a

N W E S

0 25 50
Miles

TITLE:
Site Location

PROJECT:
Removal Site Evaluation
Boyd Tisi No. 2 Mine Site

DATE: 6/15/2018	DOCUMENT NAME: Removal Site Evaluation Report	
Stantec	AUTHOR: CBB	REVIEWER: EDZ
	FIGURE: 1-1	

Document Path: U:\233001213\03_data\gis_cad_MXDs\RSE\RSE_BoydTisi\RSE_BoydTisi_Site_Location_11x17_L_20180612.mxd

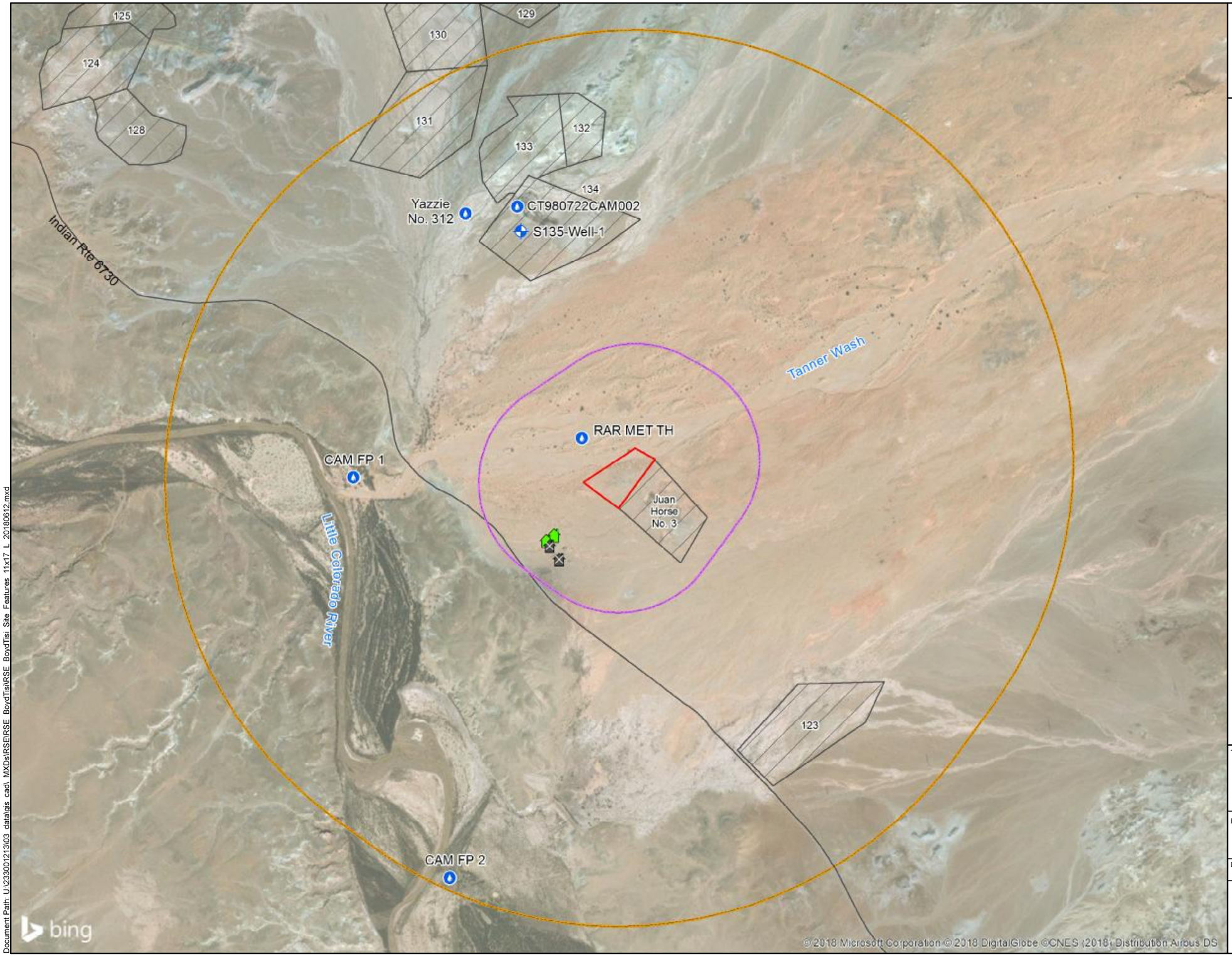

NAVAJO NATION
AUM Environmental
Response Trust-First Phase

LEGEND

- Site Clearance Identified Water Feature[1]
- Water Well[2]
- Habitable Building
- Uninhabitable Building
- Claim Boundary
- 1/4-Mile Claim Boundary Buffer
- 1-Mile Claim Boundary Buffer
- Other Claim Boundary

NOTES:

1. Water features and identification names identified in 2007 AUM Atlas and/or in database provided by the Navajo Nation Department of Water Resources.

2. Well identified during field mapping.

REFERENCES:

Coordinate System: NAD 1983 UTM Zone 12N

Basemap image accessed from BING Maps imagery web mapping service (http://www.bing.com/maps) on 06/2018.

N
W E
S

0 1,200 2,400
Feet

TITLE:

Site Features

PROJECT:

Removal Site Evaluation
Boyd Tisi No. 2 Mine Site

DATE: 6/25/2018

DOCUMENT NAME: Removal Site Evaluation Report

AUTHOR: CBB

REVIEWER: EDZ

Stantec

FIGURE: 2-1

Document Path: U:\233001213\03_data\gis_cad_MXDs\RSE\RSE_BoydTisi\RSE_BoydTisi_Site_Features_11x17_L_20180612.mxd

4. Radiological Data:
Background Measurement (contact) - 2.7 pCi/g
Background Measurement (1 meter) - 13.2 uR/hr

and Drawing No. 1

7. For Post Reclamation contours, refer to Map No. 24.

NORTH

EASTING
662000 662100 662200 662300 662400 662500 662600 662700 662800

NORTHING
1770100 1770000 1769900 1769800 1769700 1769600 1769500 1769400

Tanner Wash

WP 1
WP 2
WP 3
WP 4
WP 5
PIT

4155
4150

Juan
Horse
No. 3

© 2018 Microsoft Corporation © 2018 DigitalGlobe ©CNES (2018) Distribution Airbus DS

NAVAJO NATION
AUM Environmental
Response Trust-First Phase

LEGEND

- Contour Interval (1 ft.)
- Claim Boundary
- Other Claim Boundary
- 1993 NAML Reclamation Bid Document Claim Boundary

NOTES:

1. WP = Waste Pile

2. NAML = Navajo Abandoned Mine Lands Reclamation Department

3. Historical Site Drawing Ref:
NAML, 1993. Cameron Project 2 contract documents, September.

4. Location of features displayed on historical overlay should be considered approximate. Georeference was based on the coordinate grid provided on historical drawing. Claim boundary on historical drawing deviates from current claim boundary.

REFERENCES:

Coordinate System: NAD 1983 UTM Zone 12N

Basemap image accessed from BING Maps imagery web mapping service (http://www.bing.com/maps) on 06/2018.

N
W E
S

0 100 200
Feet

TITLE:
Historical Mine Drawing Overlay

PROJECT:
Removal Site Evaluation
Boyd Tisi No. 2 Mine Site

DATE: 6/13/2018

DOCUMENT NAME: Removal Site Evaluation Report

AUTHOR: CBB
REVIEWER: EDZ

FIGURE: 2-2

Stantec

Document Path: U:\233001213\03_data\gis_cad_MXDs\RSE\RSE_BoydTisi\RSE_BoydTisi_HistoricMiningOverlay_11x17_L_20180612.mxd



NAVAJO NATION
AUM Environmental Response Trust-First Phase

LEGEND

- Road
- Claim Boundary
- Other Claim Boundary

REFERENCES:
Coordinate System: NAD 1983 UTM Zone 12N

Basemap image accessed from BING Maps imagery web mapping service (http://www.bing.com/maps) on 06/2018.

N
W E
S

0 2,000 4,000
Feet

TITLE:
Regional Aerial Photograph

PROJECT:
Removal Site Evaluation
Boyd Tisi No. 2 Mine Site

DATE: 6/13/2018

DOCUMENT NAME: Removal Site Evaluation Report

AUTHOR: CBB | REVIEWER: EDZ

FIGURE: 2-3

Stantec

Document Path: U:\233001213\03 data\gis cad\ MXDs\RSE\RSE_BoydTisi\RSE_BoydTisi_Regional Aerial 11x17 L 20180612.mxd

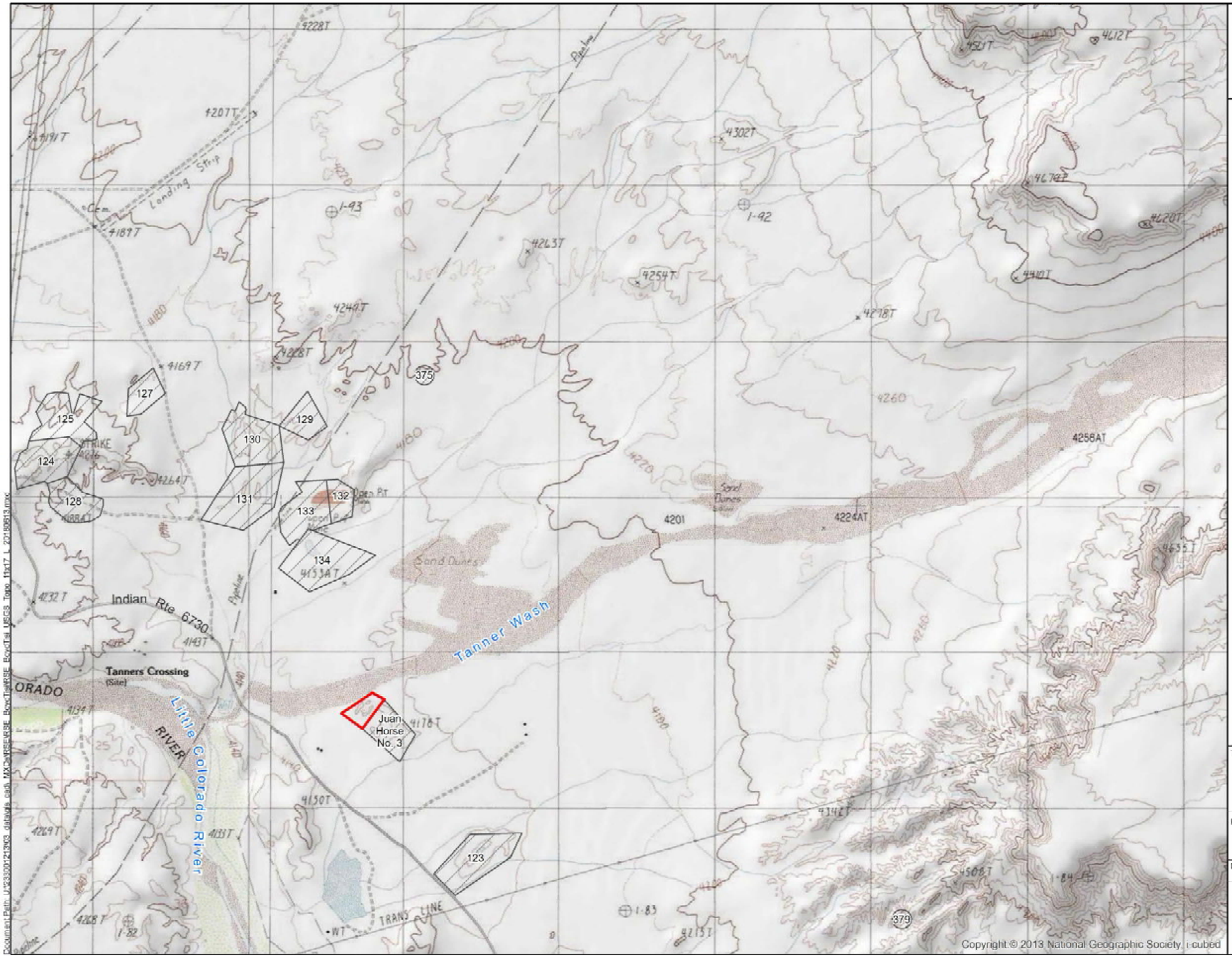

NAVAJO NATION
AUM Environmental Response Trust-First Phase

LEGEND

Claim Boundary

Other Claim Boundary

REFERENCES:
Coordinate System: NAD 1983 UTM Zone 12N

Basemap: ESRI USA Topo Maps service accessed 06/2018.

N W E S

0 2,000 4,000
Feet

TITLE:
Regional Topographic Map

PROJECT:
Removal Site Evaluation
Boyd Tisi No. 2 Mine Site

DATE: 6/13/2018	DOCUMENT NAME: Removal Site Evaluation Report	
Stantec	AUTHOR: CBB	REVIEWER: EDZ
	FIGURE: 2-4	

Document Path: U:\233001213\03_data\gis_cad_MXDs\RSE\RSE_BoydTisi\RSE_BoydTisi_USGS_Topo_11x17_L_20180613.mxd



NAVAJO NATION
AUM Environmental
Response Trust-First Phase

LEGEND

- Habitable Building
- Uninhabitable Building
- Flow Direction
- Approximate Overland Water Flow Direction
- Berm
- Drainage
- Fence
- Potential Haul Road
- Road
- Debris
- Reclaimed
- Claim Boundary
- 100-Foot Claim Buffer
- Other Claim Boundary

REFERENCES:
Coordinate System: NAD 1983 UTM Zone 12N

Basemap image accessed from BING Maps imagery web mapping service (http://www.bing.com/maps) on 06/2018.

N
W E
S

0 250 500
Feet

Site Map

PROJECT:
Removal Site Evaluation
Boyd Tisi No. 2 Mine Site

DATE: 6/13/2018

DOCUMENT NAME: Removal Site Evaluation Report

AUTHOR: CBB

REVIEWER: EDZ

FIGURE: 2-5

Stantec

Document Path: U:\233001213\03_data\gis_cad_MXDs\RSE\RSE_BoydTisi\RSE_BoydTisi_GPS_Site_Map_11x17_L_20180612.mxd

DEPARTMENT OF THE INTERIOR
UNITED STATES GEOLOGICAL SURVEY

PREPARED IN COOPERATION WITH THE
UNITED STATES DEPARTMENT OF ENERGY

MISCELLANEOUS INVESTIGATIONS SERIES
MAP I-1446 (SHEET 1 of 2)

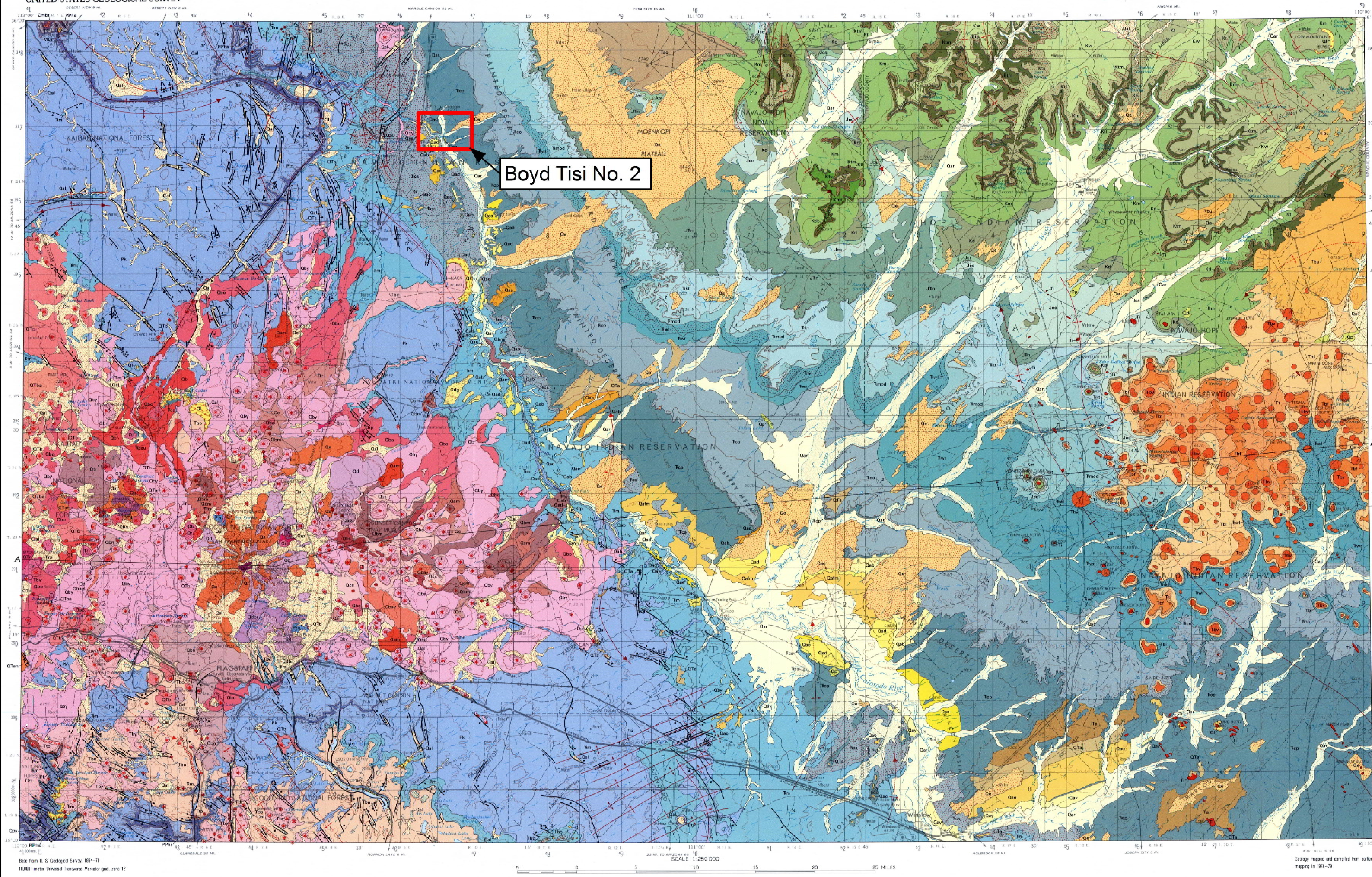

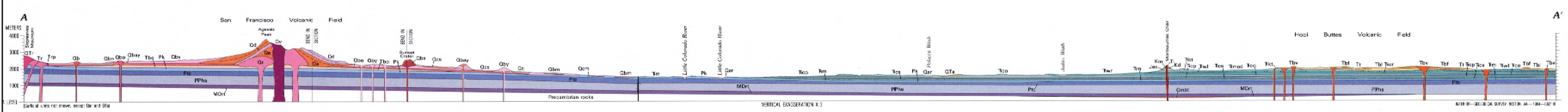

CORRELATION OF MAP UNITS

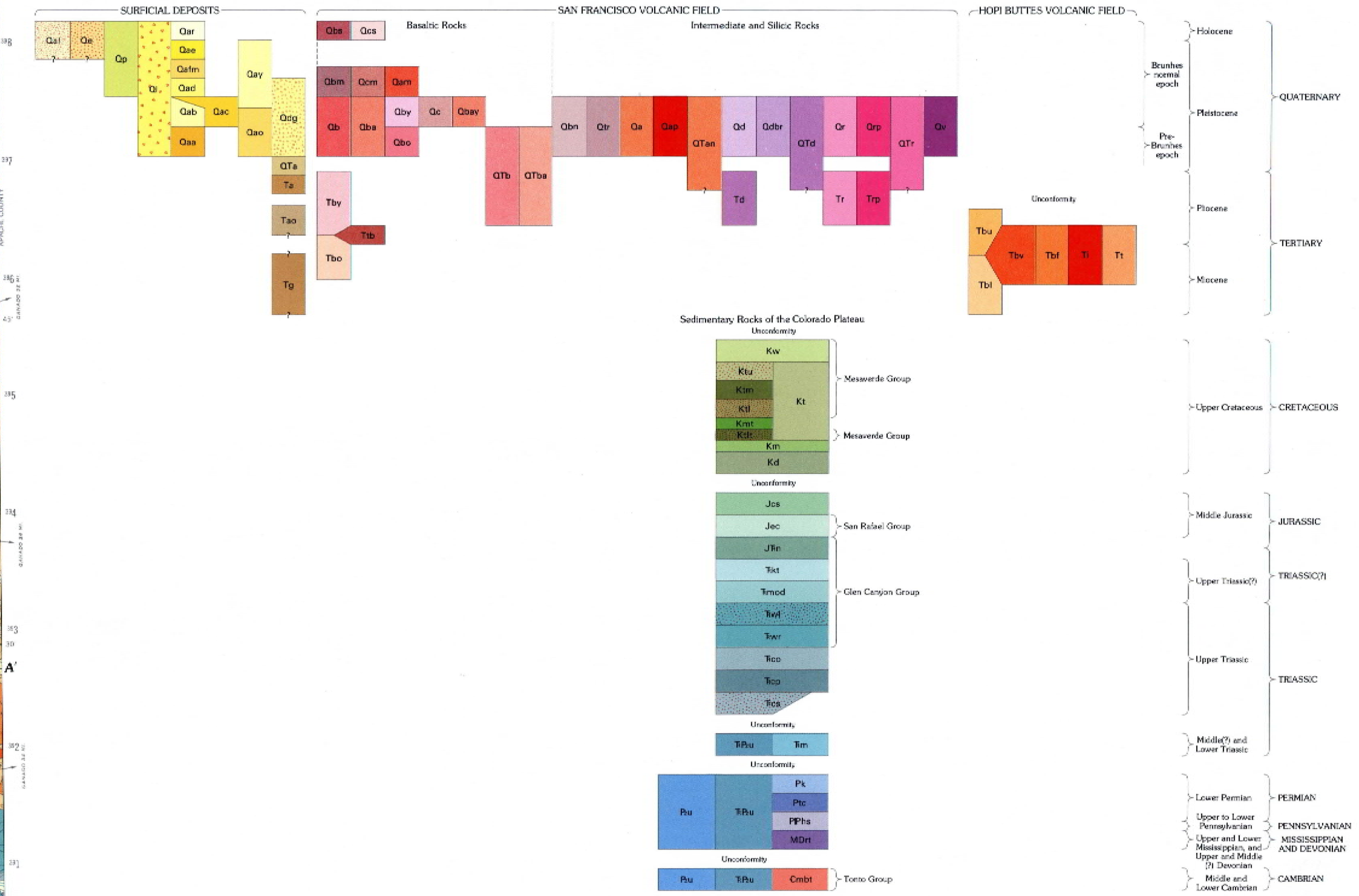

DESCRIPTION OF MAP UNITS

SURFICIAL DEPOSITS

- Qal — SILT, SAND, GRAVEL, AND BOULDERS (HOLOCENE AND PLEISTOCENE)—Includes alluvium, colluvium, and eolian, glacial, and glaciofluvial (on San Francisco Mountain) deposits. Postdates bounding faults
- Qe — EOLIAN DEPOSITS (HOLOCENE TO PLEISTOCENE)—Sand, well-sorted. Forms extensive sand sheet between zero and more than 40 ft (13 m) thick. Most are derived from the modern floodplain of the Little Colorado River, some are derived from older alluvial deposits
- Qp — PLAYA DEPOSITS (HOLOCENE TO PLEISTOCENE)—Silt and clay, thinly stratified on flat floor of shallow, undrained desert lake basin
- Ql — LANDSLIDE DEPOSITS (HOLOCENE AND PLEISTOCENE)—Unsorted rock debris, ranging in diameter from less than 1 to 30 ft (0.1–10 m) commonly occurring as large slump blocks
- Qar — ALLUVIUM (HOLOCENE)—Sand, silt, and clay with minor interbedded gravel. Recent floodplain deposits of the Little Colorado River and tributaries entering from the northeast
- Qae — ALLUVIAL UNIT E (PLEISTOCENE)—Gravel and sand, 10 to 20 ft (3–6 m) thick. Occurs 5 to 20 ft (2–6 m) above present channel of Little Colorado River
- Qafm — ALLUVIAL UNIT M (PLEISTOCENE)—Silt, clay, and sand deposited as valley fill upstream from Grand Falls. Valley fill resulted from damming of the Little Colorado River by basalt flow (Qbm) from Merriam Crater area
- Qad — ALLUVIAL UNIT D (PLEISTOCENE)—Gravelly sand and interbedded sand and silt, locally with large blocks of limestone derived from the Permian Kaibab Formation. Unit 120 ft (40 m) thick near Black Falls
- Qac — ALLUVIAL UNIT C (PLEISTOCENE)—Silt, clay, and sand with several thin interbedded pebbly gravels; 100–120 ft (33–40 m) thick near Cameron. Deposition of this unit was caused by damming of the Little Colorado River at Cameron by basalt flow (Reiche, 1937) of Tappan age (0.53 ± 0.08 m.y., Damon and others, 1974)
- Qab — ALLUVIAL UNIT B (PLEISTOCENE)—Gravelly sand with interbedded sand and silt; 100–120 ft (33–40 m) thick near Black Falls
- Qaa — ALLUVIAL UNIT A (PLEISTOCENE)—Gravelly sand with interbedded sand and silt; 115 ft (38 m) thick near Black Falls
- Qay — YOUNGER ALLUVIUM (PLEISTOCENE)—Includes alluvial units E, D, and the upper part of B, undifferentiated
- Qao — OLDER ALLUVIUM (PLEISTOCENE)—Includes the lower part of alluvial unit B, all of unit A, and the Quaternary part of unit QTa, undifferentiated
- Qdg — GRAVEL AT DEADMAN WASH (PLEISTOCENE)—Gravel, pebble- to boulder-size, rounded to subrounded, with interbedded sand; clasts of silicic, intermediate, and mafic rocks derived from San Francisco Mountain; 20 to 80 ft (6–26 m) thick. Occurs as 3 separate deposits along Deadman Wash, one of which is overlain by a basalt flow dated at 0.50 ± 0.11 m.y. (P. E. Damon, written commun., 1979)
- QTa — ALLUVIUM (PLEISTOCENE to PLIOCENE)—Interbedded sand, silt, and clay with some interbedded gravel; 130 to 160 ft (43–53 m) thick near Rincon Basin
- Ta — ALLUVIUM (PLIOCENE)—Sand, silt, and clay deposits with some interbedded gravel; 130 ft (43 m) thick near Rincon Basin. Possibly equivalent to the alluvium beneath the basalt flow on Black Point (Haines and Bowles, 1976) which has been dated at 2.43 ± 0.32 m.y. by Damon and others (1974)
- Tao — OLDER TERTIARY ALLUVIUM (PLIOCENE)—Sand, gravel, and silt on Moenkopi Plateau. Contains pebbles, cobbles, and small boulders derived from the Cretaceous rocks on Black Mesa
- Tg — SANDSTONE AND GRAVEL (MIOCENE)—Weakly consolidated interbedded sand and gravel; contains clasts of Paleozoic and Precambrian rocks as much as 2 ft (0.6 m) in diameter. Underlies Miocene basalts in Sycamore and Oak Creek Canyons

ROCKS OF SAN FRANCISCO VOLCANIC FIELD

Principally basalt flows and pyroclastic deposits of alkali-olivine to hawaiitic types surrounding localized centers of intermediate to silicic lavas and pyroclastic deposits having calc-alkalic affinities

- Qbs — BASALT OF SUNSET CRATER ERUPTIVE SEQUENCE (HOLOCENE)—Time of eruption determined from stratigraphic, dendrochronologic, and paleomagnetic data (Smiley, 1958; Shoemaker, written commun., 1977) was approximately A.D. 1065 to 1250
- Qcs — BASALTIC CINDER AND ASH BLANKET FROM ERUPTION OF SUNSET CRATER (HOLOCENE)—Shown only where underlying unit cannot be seen or interpreted from topography
- Qbm — BASALT OF MERRIAM AGE (PLEISTOCENE)—Dated at 150,000 years old or less, by P. E. Damon, unpub. data, 1979). Flow surface is rough and unweathered; vent is sharp rimmed
- Qcm — BASALTIC CINDER AND ASH BLANKET FROM VENT OF MERRIAM AGE (PLEISTOCENE)—Shown only where underlying unit cannot be seen or interpreted from topography. Locally includes alluvium
- Qam — BASALTIC ANDESITE OF MERRIAM AGE (PLEISTOCENE)—Flow surface is very fresh and generally blocky. Cone is sharp rimmed with spatter. Composition similar to pre-Merriam basaltic andesites (see Qba); locally aphyric. Three K-Ar ages range from 51,000 to 68,000 yrs (Baksi, 1974, and P. E. Damon, unpub., 1979 data)
- Qb — BASALT OF PRE-MERRIAM AGE (PLEISTOCENE)—Flow is undissected and lies close to level of present drainage
- Qba — BASALTIC ANDESITE OF PRE-MERRIAM AGE (PLEISTOCENE)—Andesite of basaltic texture; commonly contains sieved plagioclase, augite, and olivine in partly glassy groundmass. Quartz, amphibole, or hypersthene may be present
- Qby — BASALT OF PRE-MERRIAM AGE AND WITHIN THE BRUNHES EPOCH (PLEISTOCENE)—Normal polarity and less than approximately 0.7 m.y. Includes flows of Tappan age (0.2–0.7 m.y.) (Moore and others, 1976)
- Qbo — BASALT OF PRE-BRUNHES AGE (PLEISTOCENE)—Normal or reversed polarity and between approximately 0.7 and 1.8 m.y. old. Includes most flows of Woodhouse age (0.8–3.0 m.y.) (Moore and others, 1976)
- Qc — BASALTIC CINDER AND ASH BLANKET FROM VENTS OF BRUNHES AGE (PLEISTOCENE)—Shown only where underlying unit cannot be seen or interpreted from topography. Locally includes alluvium
- Qbay — BASALTIC ANDESITE OF PRE-MERRIAM AGE AND WITHIN THE BRUNHES EPOCH (PLEISTOCENE)—Composition similar to other pre-Merriam basaltic andesite (see Qba)
- QTb — BASALT (PLEISTOCENE OR POSSIBLY PLIOCENE)—Flow or cone with uncertain stratigraphic relation to rocks of known age. Unit mapped west of San Francisco Mountain
- QTba — BASALTIC ANDESITE (PLEISTOCENE OR UPPER PLIOCENE)—Flow or cone with uncertain age; occurs at western edge of mapped area. Composition similar to pre-Merriam basaltic andesite (see Qba)
- Qbn — BENMOREITE (PLEISTOCENE)—High-sodium, commonly aphyric andesite; forms flow, cone, or dome west or southwest of San Francisco Mountain
- Qtr — TRACHYTE (PLEISTOCENE)—Large, thick (400 ft, 120 m) aphyric flow on northwest side of Kendrick Peak
- Qa — ANDESITE FLOW, FLOW BRECCIA, OR TUFF BRECCIA (PLEISTOCENE)—Associated with San Francisco Mountain stratovolcano
- Qap — ANDESITE PYROCLASTIC DEPOSITS OF O'LEARY PEAK (PLEISTOCENE)—Vent materials erupted through the O'Leary Peak dacite dome
- QTan — ANDESITE FLOW OR CONE (PLEISTOCENE OR PLIOCENE)—Occurring on and west of Kendrick Peak. K-Ar ages range from 1.4 to 2.5 m.y. (E. H. McKee, unpub. data, 1979) but most mapped units are believed to be Pleistocene
- Qd — DACITE FLOW OR DOME (PLEISTOCENE)—Associated principally with San Francisco Mountain stratovolcano and O'Leary Peak domes
- Qdbr — DACITE PYROCLASTIC FLOW BRECCIA (PLEISTOCENE)—From vents in San Francisco Mountain and Elden Mountain volcanoes
- QTd — DACITE FLOW OR DOME (PLEISTOCENE OR UPPER PLIOCENE)—Associated with Kendrick Peak volcano. K-Ar ages range from 1.8 to 2.6 m.y. (E. H. McKee, unpub. data, 1979)
- Qr — RHYOLITE FLOW OR DOME (PLEISTOCENE)—Locally with marginal rhyolite breccia or pumice
- Qrp — RHYOLITE PYROCLASTIC DEPOSITS (PLEISTOCENE)—Predominantly air-fall deposits on northeast side of San Francisco Mountain; K-Ar age is 0.80 m.y. (G. A. Izett and C. W. Naeser, written commun., 1979)
- QTr — RHYOLITE (PLEISTOCENE OR UPPER PLIOCENE)—Dome or flow with uncertain age; associated with rhyolite of Tertiary age (Sitgreaves Mountain) and Quaternary age (Kendrick Peak)
- Qv — VENT FLOWS, BRECCIAS, TUFF, AND INTRUSIVE ANDESITE, DACITE, AND RHYOLITE (PLEISTOCENE)—Combined units form part of vent complex exposed at head of central valley in San Francisco Mountain stratovolcano
- Tby — BASALT (PLIOCENE)—Generally smooth, alluvial-covered flows with dissected margins. Dated units are approximately 5 to 2 m.y. old (Damon and others, 1974, and Damon, unpub. data, 1979). Includes some older basalts (Tbo) at base of unit on upper walls of Sycamore Canyon
- Ttb — BASALTIC TUFF AND TUFF BRECCIA (PLIOCENE)—Deposits of cinders, hydrated basaltic glass, and accessory and accidental xenoliths in Sycamore and Oak Creek Canyon areas. Age is between 4.2 and 4.9 m.y. in Volunteer Canyon (Damon and others, 1974). Locally includes older basalt flows in Sycamore and Oak Creek Canyons
- Tbo — OLDEST BASALTS OF SAN FRANCISCO VOLCANIC FIELD (PLIOCENE AND MIOCENE)—Informally called rim basalts; in Volunteer Canyon unit includes four flows with K-Ar ages of 3.9 to 9.0 m.y. (Damon and others, 1974)
- Td — DACITE DOME (PLIOCENE)—Occurs on northeast flank of San Francisco Mountain stratovolcano. Age is 2.78± 0.13 m.y. (Damon and others, 1974)
- Tr — RHYOLITE DOME OR FLOW (PLIOCENE)—Glassy, aphyric to porphyritic rhyolite. Associated with Sitgreaves Mountain and Kendrick Peak volcanoes and isolated domes between these centers and San Francisco Mountain stratovolcano
- Trp — RHYOLITE PYROCLASTIC DEPOSITS (PLIOCENE)—Associated with Sitgreaves Mountain; predominantly air-fall deposits

ROCKS OF HOPI BUTTES VOLCANIC FIELD

BIDAHOCHI FORMATION (PLIOCENE AND MIOCENE)

- Tbu — Upper member—Sandstone, weakly consolidated, mostly fluvial in origin
- Tbl — Lower member—Calcareous mudstone, siltstone, sandstone, and minor rhyolitic ash. Mostly lacustrine in origin
- Tbv — Volcanic vent deposits—Includes tuff breccia, agglomerate, and lacustrine deposits in maar craters. Lava flows may cover vents and other deposits. Ages range from approximately 8.5 to 4.2 m.y. (P. E. Damon, unpub. data, 1979)
- Tbf — Monchiquite lava flow—Alkalic lamprophyre containing clinopyroxene, olivine, biotite, and analcite. Extends beyond its source, in some cases as much as several kilometers. Ages are 7 to 6 m.y. (P. E. Damon, unpub. data, 1979)
- Ti — Dike or neck—Monchiquite similar to lava flows (Tbf); commonly includes tuff breccia. Age range is same as for vent deposits (Tbv)
- Tt — Bedded monchiquite tuff—Mostly lacustrine or air-fall in origin; may extend several kilometers from the eruptive source

SEDIMENTARY ROCKS OF THE COLORADO PLATEAU

- Kw — WEPO FORMATION OF MESAVERDE GROUP (UPPER CRETACEOUS)—Alternating beds of olive-gray siltstone, coal, and yellowish-gray sandstone. Thickness 0–350 ft (0–107 m)
- Kt — TOREVA FORMATION OF MESAVERDE GROUP (UPPER CRETACEOUS)
- Ktu — Upper sandstone member—Yellowish-gray to grayish-orange-pink, fine-grained to very coarse grained sandstone. Thickness 0–80 ft (0–24 m)
- Ktm — Middle carbonaceous mudstone member—Variegated mudstone. Thickness 0–100 ft (0–30 m)
- Ktl — Lower sandstone member—Light-brown to pale-yellowish-gray, fine- to medium-grained sandstone. Thickness 0–120 feet (0–37 m)
- Ktlt — Tongue of Toreva Formation—Sandstone. Intertongues with Mancos Shale. Mapped in the Padilla Mesa area. Thickness 0–250 ft (0–76 m)
- Km — MANCOS SHALE (UPPER CRETACEOUS)—Light- to dark-gray claystone and siltstone. Thickness 160–725 ft (50–220 m)
- Kmt — Upper tongue—Light- to dark-gray claystone and siltstone. Mapped in the Padilla Mesa area. Thickness 0–50 ft (0–15 m)
- Kd — DAKOTA SANDSTONE (UPPER CRETACEOUS)—Tan, brown, and gray sandstone, conglomeratic sandstone, and conglomerate. Thickness 0–90 ft (0–27 m). Pinches out to southeast
- Jcs — COW SPRINGS SANDSTONE (MIDDLE JURASSIC)—Greenish-gray to light-yellowish-gray, fine- to medium-grained, cross-stratified sandstone. Thickness 0–285 ft (0–87 m) where exposed; 470 ft (143 m) thick in well at Keams Canyon. Pinches out to southeast
- Jec — ENTRADA SANDSTONE AND CARMEL FORMATION (MIDDLE JURASSIC)—Reddish-brown siltstone and sandstone, and white cross-stratified sandstone. Thickness 0–395 ft (0–120 m)
- JTn — NAVAJO SANDSTONE (JURASSIC AND TRIASSIC?)—Grayish-orange-pink, even-grained, thickly cross-stratified sandstone. Thickness 0–465 ft (0–142 m). Pinches out to east
- Tkt — KAYENTA FORMATION (UPPER TRIASSIC?)—Silty facies, grayish-red mudstone, siltstone, and silty sandstone. Thickness 0–600 ft (0–183 m). Pinches out to southeast
- Tmod — DINOSAUR CANYON SANDSTONE MEMBER OF MOENAVE FORMATION (UPPER TRIASSIC?)—Orangish-red, cross-stratified and flat-bedded sandstone and sandy siltstone. Thickness 100–400 ft (30–122 m). Pinches out eastward beneath Hopi Buttes volcanic field

WINGATE SANDSTONE (UPPER TRIASSIC)

- Twl — Lukachukai Member—Reddish-brown fine-grained, cross-stratified sandstone. Thickness 0–255 ft (0–78 m). Pinches out to northwest
- Twr — Rock Point Member—Reddish-brown siltstone and mudstone. Thickness 0–800 ft (0–245 m). Pinches out to northwest

CHINLE FORMATION (UPPER TRIASSIC)

- Tco — Owl Rock Member—Mottled light-gray and grayish-pink interbedded limestone and calcareous siltstone. Thickens from 330 ft (100 m) near Little Colorado River to 620 ft (190 m) beneath Black Mesa
- Tcp — Petrified Forest Member—Claystone, siltstone, and minor sandstone, variegated. Thickness 0–920 ft (0–280 m)
- Tcs — Shinarump Member—Light-gray to yellowish-gray sandstone and conglomerate. Thickness 0–70 ft (0–21 m)
- Tm — MOENKOPI FORMATION (MIDDLE? AND LOWER TRIASSIC)—Reddish-brown mudstone, siltstone, silty sandstone, and sandstone. Thickness 0–370 ft (0–113 m)
- TPu — MIDDLE(?) AND LOWER TRIASSIC AND PALEOZOIC SEDIMENTARY ROCKS, UNDIVIDED—Sandstone, shale, siltstone, limestone, dolomitic limestone, and dolomite; upturned on east side of Slate Mountain rhyolite dome (Qr)
- Pu — PALEOZOIC SEDIMENTARY ROCKS, UNDIVIDED—Sandstone, shale, siltstone, limestone, dolomitic limestone, and dolomite; upturned around northern part of Elden Mountain dacite dome (Qd)
- Pk — KAIBAB FORMATION (LOWER PERMIAN)—Yellowish-gray to light-gray silty dolomite, dolomitic sandstone, minor sandstone and dolomitic limestone, locally map unit includes lower part of Moenkopi Formation. Thickness 0–510 ft (0–155 m). Thickest in southwest corner of area; pinches out eastward
- Ptc — TOROWEAP FORMATION AND COCONINO SANDSTONE (LOWER PERMIAN)—Light-colored, cross-stratified sandstone; facies of siltstone, sandstone, and dolomite occur in the Toroweap on western edge of map. Coconino laterally equivalent to De Chelly Sandstone to north and east. Thickness 360–1,050 ft (110–320 m)
- PPhs — HERMIT SHALE (LOWER PERMIAN) AND SUPAI FORMATION (LOWER PERMIAN TO LOWER PENNSYLVANIAN)—Combined thickness 1230–2385 ft (375–727 m)
  - Hermit Shale—Reddish shale and interbedded sandstone and shale. Present in northwest corner only
  - Supai Formation—Reddish siltstone, cross-stratified sandstone; some limestone in the lower part
- MDrt — REDWALL LIMESTONE (UPPER AND LOWER MISSISSIPPIAN) AND TEMPLE BUTTE LIMESTONE (UPPER AND MIDDLE? DEVONIAN)—Combined thickness 0–665 ft (0–203 m). Units pinch out to southeast
  - Redwall Limestone—Massive light-gray limestone and dolomite
  - Temple Butte Limestone—Dolomite, reddish siltstone, sandy limestone, and gray sandstone
- Cmbt — MUAV LIMESTONE AND BRIGHT ANGEL SHALE (MIDDLE CAMBRIAN) AND TAPEATS SANDSTONE (MIDDLE AND LOWER CAMBRIAN) OF TONTO GROUP—Tonto Group absent in subsurface in southern half of area. Combined thickness 0–340 ft (0–104 m)
  - Muav Limestone—Mottled-gray and purple dolomitic limestone. Lower part of Muav intertongues with upper part of Bright Angel
  - Bright Angel Shale—Mainly green, purple, and reddish-brown siltstone interbedded with light-brown sandstone in the lower part
  - Tapeats Sandstone—Medium- to coarse-grained sandstone and pebble conglomerate, commonly crossbedded

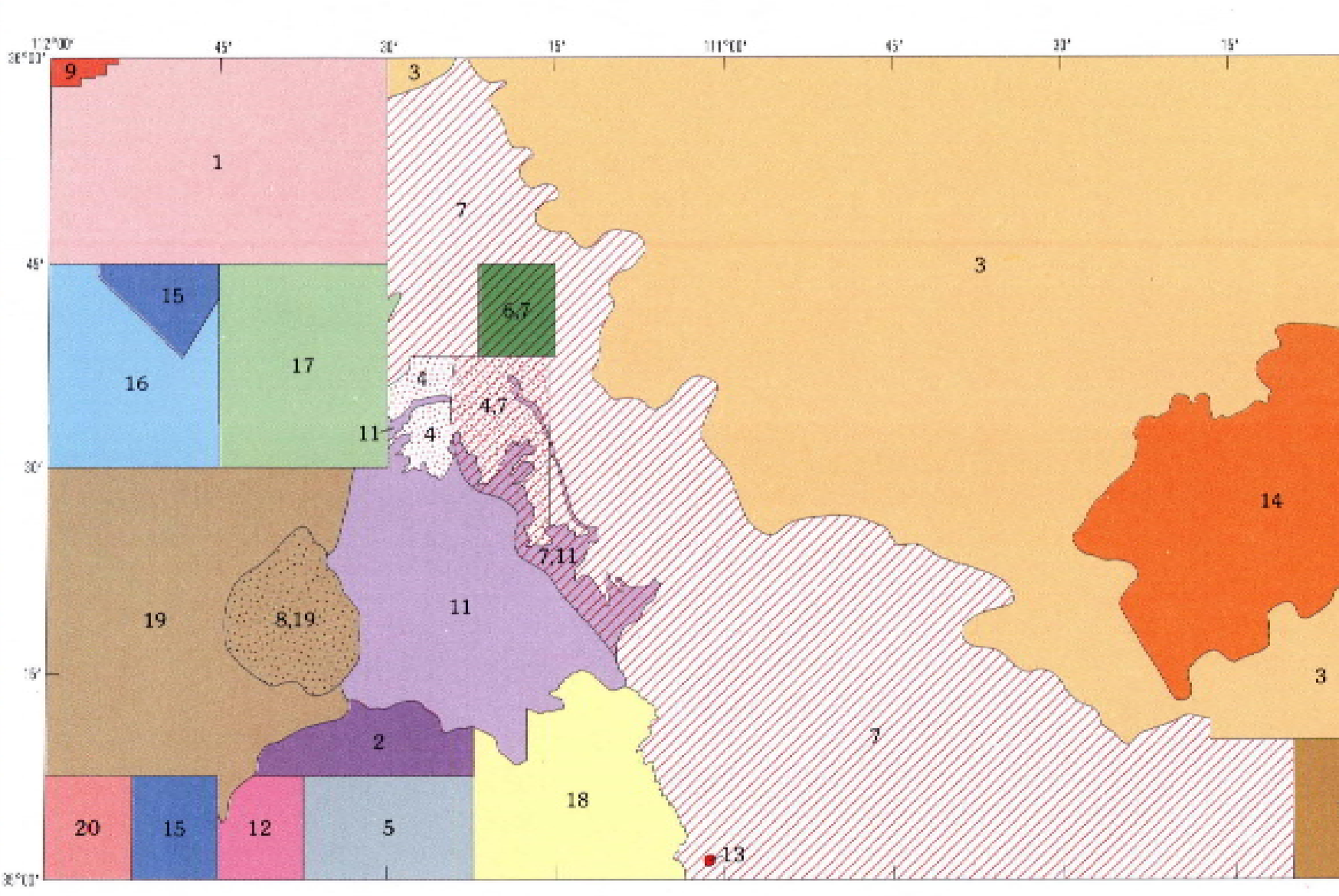

INDEX MAP SHOWING GEOLOGIC SOURCES

GEOLOGIC SOURCES

1. G. H. Billingsley, C. W. Barnes, and G. E. Ulrich, unpub. mapping, 1:62,500,1979.
2. G. H. Billingsley, unpub. mapping, 1:24,000, 1979.
3. Cooley and others, 1969, pl. 1, sheets 2 and 4, 1:125,000.
4. Cosner, 1962, pl. 20, 1:63,360.
5. R. L. Eastwood and L. D. Nealey, unpub. mapping, 1:24,000, 1979.
6. Haines and Bowles, 1976, 1:24,000.
7. Hereford, 1979, 1:250,000.
8. R. F. Holm, unpub. mapping, 1:24,000, 1980.
9. Huntoon and others, 1976, 1:62,500.
10. Mann, 1976, pl. 1, 1:250,000.
11. Moore and Wolfe, 1976, 1:50,000.
12. L. D. Nealey and E. W. Wolfe, unpub. mapping, 1:24,000, 1979.
13. Shoemaker, 1960, figure 2, 1:25,000.
14. R. L. Sutton, unpub. mapping, 1:62,500, 1968.
15. G. E. Ulrich, unpub. mapping, 1:24,000, 1979.
16. G. E. Ulrich and E. W. Wolfe, unpub. mapping, 1:50,000, 1979.
17. Ulrich and Bailey, 1974, 1:50,000.
18. J. Weber, unpub. mapping, 1:24,000, 1979.
19. E. W. Wolfe, G. E. Ulrich, and C. G. Newhall, unpub. mapping, 1:50,000, 1975–1979.
20. E. W. Wolfe and D. A. Hahn, unpub. mapping, 1:24,000, 1979.

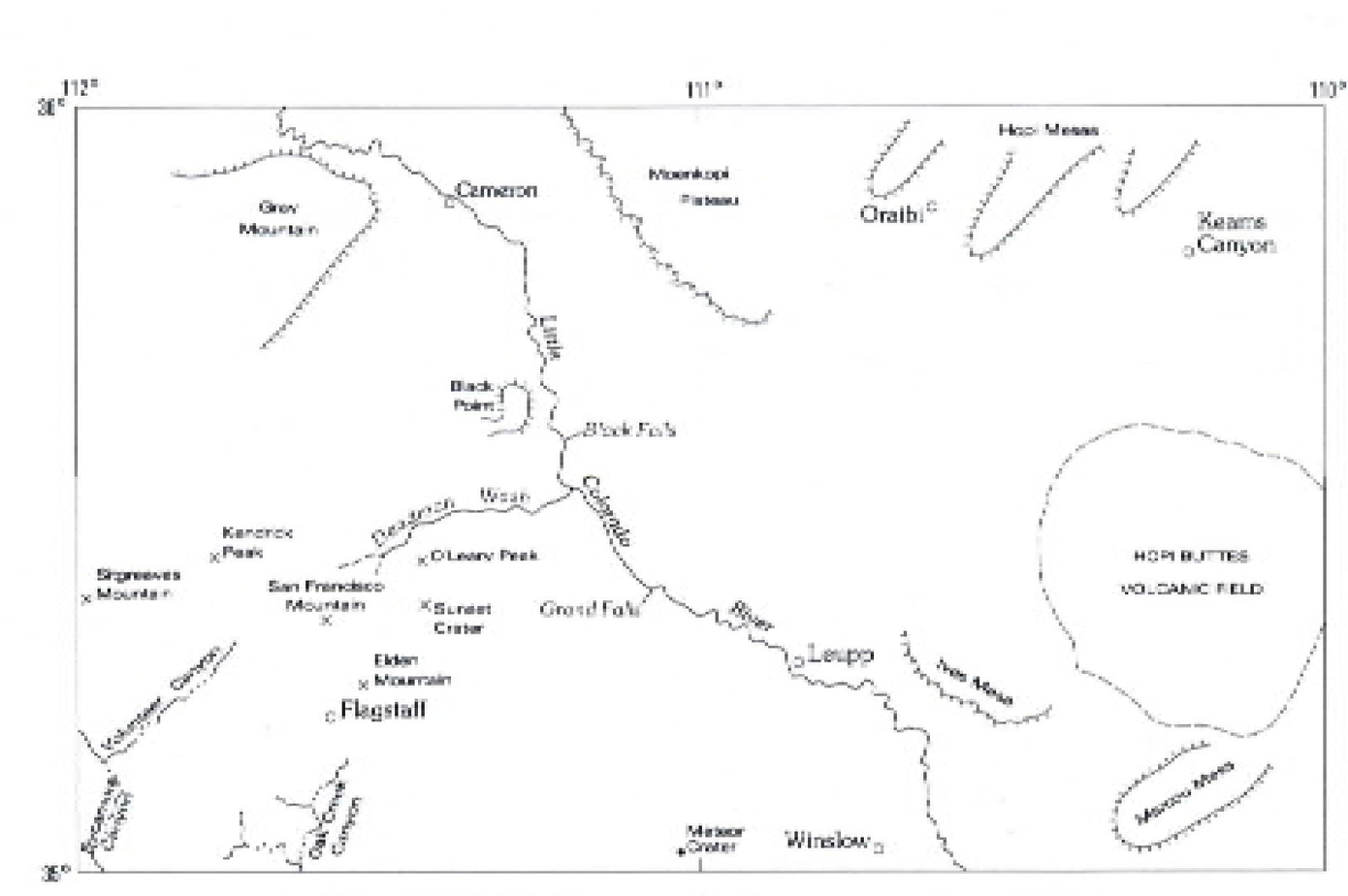

GEOGRAPHIC FEATURES IN THE FLAGSTAFF 1° x 2° QUADRANGLE, ARIZONA

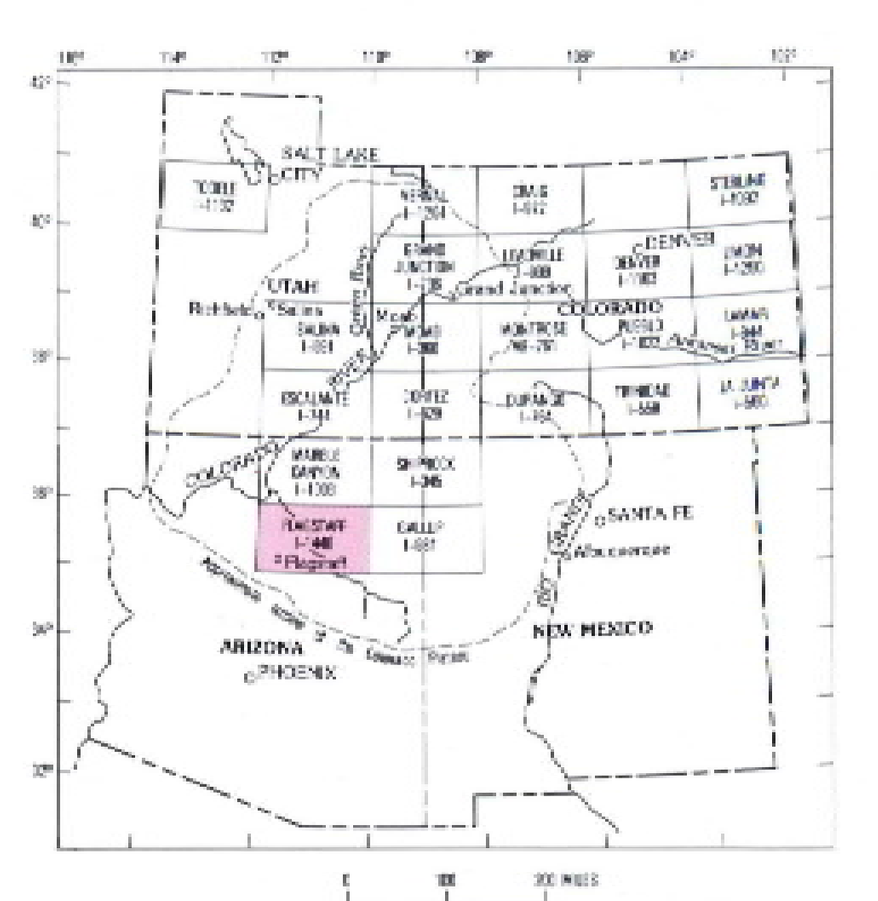

INDEX MAP SHOWING AREA OF FLAGSTAFF QUADRANGLE AND OTHER PUBLISHED 1° x 2° QUADRANGLES

REFERENCES

Baksi, A. K., 1974, K-Ar study of the S. P. flow: Canadian Journal of Earth Science, v. 11, p. 1350–1356.
Cooley, M. E., Harshbarger, J. W., Akers, J. P., and Hardt, W. F., 1969, Regional hydrogeology of the Navajo and Hopi Indian Reservations, Arizona, New Mexico, and Utah: U. S. Geological Survey Professional Paper 521–A, 61 p.
Cosner, O. J., 1962, Ground water in the Wupatki and Sunset Crater National Monuments, Coconino County, Arizona: U. S. Geological Survey Water-Supply Paper 1475–J, p. 357–374.
Damon, P. E., Shafiqullah, M., and Leventhal, J. S., 1974, K-Ar chronology for the San Francisco volcanic field and rate of erosion of the Little Colorado River, in Karlstrom T. N. V., Swann, G. A., and Eastwood, R. L., eds., pt. 1 of Geology of Northern Arizona: Geological Society of America Guidebook for Rocky Mountain Section Meeting Flagstaff, Arizona, v. 6, no. 5, p. 221–235. [Ages have been corrected for recently revised decay constants.]
Haines, D. V., and Bowles, C. G., 1976, Preliminary geologic map of the Wupatki NE quadrangle, Arizona: U. S. Geological Survey Open-File Report 76–703, scale 1:24,000.
Hereford, Richard, 1979, Preliminary geologic map of the Little Colorado River Valley between Cameron and Winslow, Arizona: U. S. Geological Survey Open-File Report 79–1574 scale 1:250,000.
Huntoon, P. W., Billingsley, G. H., Breed, W. J., Sears, J. S., Ford, T. D., Clark, M. D., Babcock, R. S., and Brown, E. H., 1976, Geologic map of the Grand Canyon National Park, Arizona: Grand Canyon Natural History Association and Museum of Northern Arizona, scale 1:62,500.
Mann, L. J., 1976, Ground Water resources and water use in southern Navajo County, Arizona: Arizona Water Commission Bulletin 10, 106 p.
Moore, R. B., and Wolfe, E. W., 1976, Geologic map of the eastern San Francisco volcanic field, Arizona: U. S. Geological Survey Miscellaneous Investigations Series Map I-953, scale 1:50,000.
Moore, R. B., Wolfe, E. W., and Ulrich, G. E., 1976, Volcanic rocks of the eastern and northern parts of the San Francisco volcanic field, Arizona: U. S. Geological Survey Journal of Research, v. 4, no. 5, p. 549–560.
Reiche, Parry, 1937, Quaternary deformation in the Cameron district of the plateau province: American Journal of Science, v. 34, no. 200, p. 128–138.
Shoemaker, E. M., 1960, Penetration mechanics of high velocity meteorites, illustrated by Meteor Crater, Arizona: International Geological Congress, 21st Session, pt. 18, Copenhagen, p. 418–434.
Smiley, T. L., 1958, The geology and dating of Sunset Crater, Flagstaff, Arizona, in Guidebook of the Black Mesa Basin: New Mexico Geological Society, 9th Field Conference Guidebook, p. 186–190.
Ulrich, G. E., and Bailey, N. G., 1974, Geologic map of the SP Mountain quadrangle, Coconino County, Arizona: U. S. Geological Survey Open-File Report 74–5, scale 1:50,000.
Wilson, E. D., Moore, R. T., and Cooper, J. R., 1969, Geologic map of Arizona: Arizona Bureau of Mines and U. S. Geological Survey, scale 1:500,000.

Geologic Map

MAP SHOWING GEOLOGY, STRUCTURE, AND URANIUM DEPOSITS OF THE FLAGSTAFF 1° x 2° QUADRANGLE, ARIZONA

Compiled by
G. E. Ulrich, G. H. Billingsley, Richard Hereford, E. W. Wolfe,
L. D. Nealey, and R. L. Sutton

1984

NAVAJO NATION
AUM Environmental
Response Trust-First Phase

Document Path: U:\233001213\03_data\gis_cad_MXDs\RSE\RSE_BoydTisi\RSE_BoydTisi_Geology_22x34_L_20180612.mxd

TITLE:	Regional Geology
PROJECT:	Removal Site Evaluation Boyd Tisi No. 2 Mine Site
DATE:	7/19/2018
DOCUMENT NAME:	Removal Site Evaluation Report
AUTHOR:	CBB
REVIEWER:	EDZ
FIGURE:	2-6

Stantec

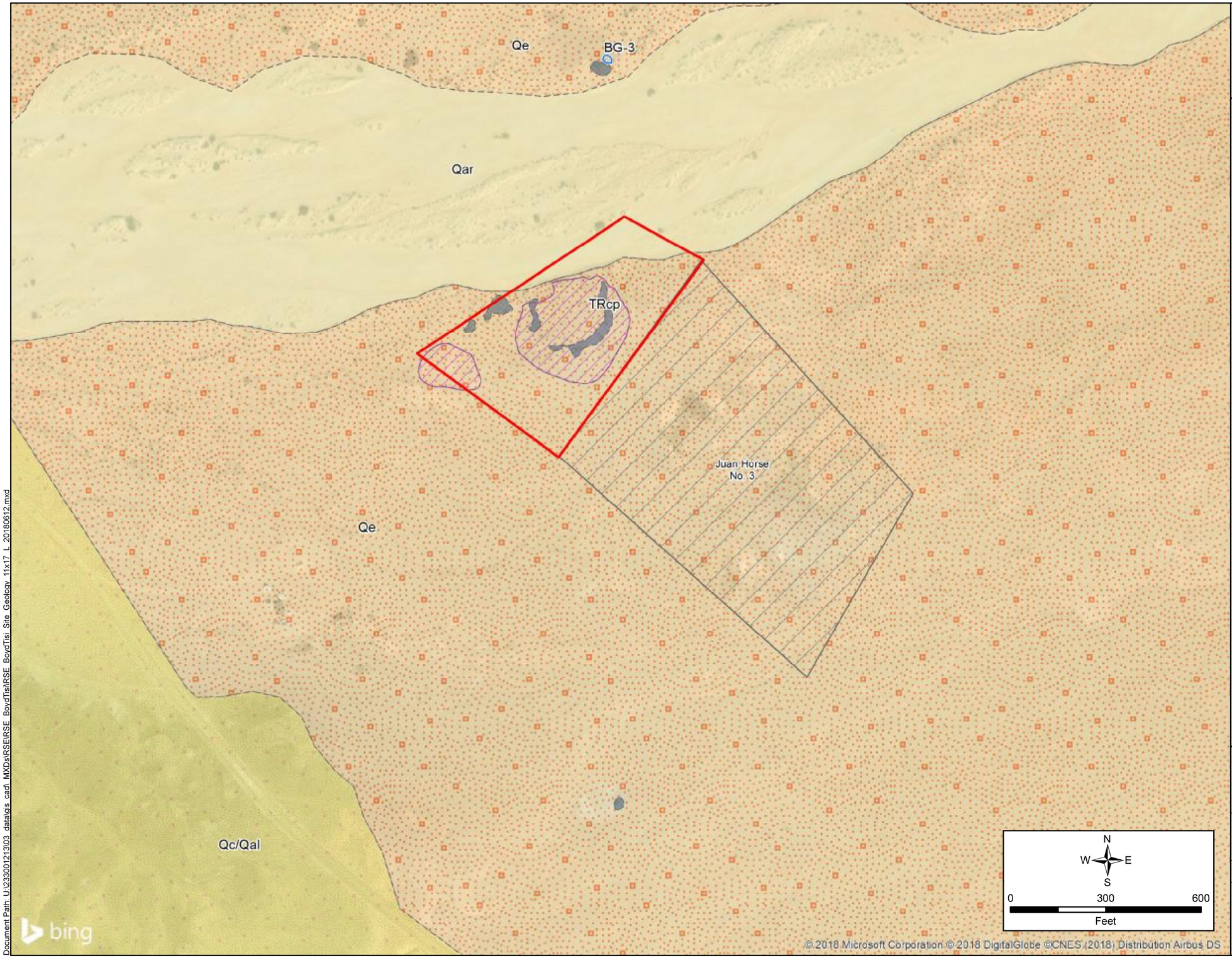

NAVAJO NATION
AUM Environmental Response Trust-First Phase

LEGEND

- Potential Background Reference Area
- Claim Boundary
- Other Claim Boundary
- Geologic Contact (Inferred)

Site Geology

QUATERNARY

- Earthworks: Human-caused disturbance of the land surface related to mining or reclamation.
- Qar: ALLUVIUM (HOLOCENE) – Sand, silt, and clay with minor inter-bedded gravel.
- Qc/Qal: Surficial deposits of alluvium and colluvium.
- Qe: EOLIAN DEPOSITS (HOLOCENE to PLEISTOCENE) - Sand mixed with residual soil, well sorted, forms extensive sand sheet from 0 to greater than 40 feet thick.

TRIASSIC

- TRcp[1]: Petrified Forest Member – CHINLE FORMATION (UPPER TRIASSIC) – Claystone, siltstone, and minor sandstone, variegated.

NOTE:

1. Bedrock units shown are at surface. Outside of mapped units, bedrock within the claim boundary is generally at 1 to 4 feet below ground surface and overlain by minor residual soils, alluvium, and eolian deposits.

REFERENCES:

Coordinate System: NAD 1983 UTM Zone 12N

Basemap image accessed from BING Maps imagery web mapping service (http://www.bing.com/maps) on 09/2018.

TITLE:

Site Geology

PROJECT:

Removal Site Evaluation
Boyd Tisi No. 2 Mine Site

DATE: 9/11/2018

DOCUMENT NAME: Removal Site Evaluation Report

AUTHOR: CBB

REVIEWER: EDZ

Stantec

FIGURE: 2-7

Document Path: U:\233001213\03_data\gis_cad_MXDs\RSE\RSE_BoydTisi\RSE_BoydTisi_Site_Geology_11x17_L_20180612.mxd

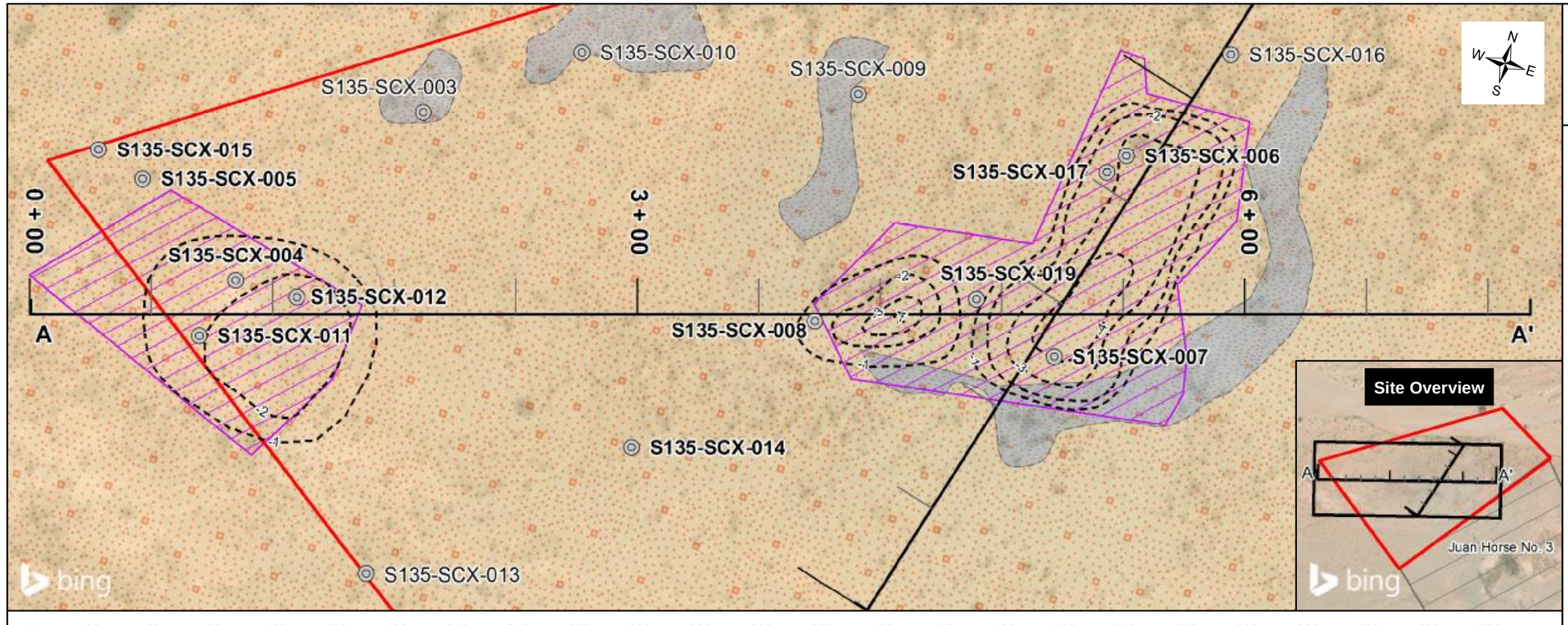

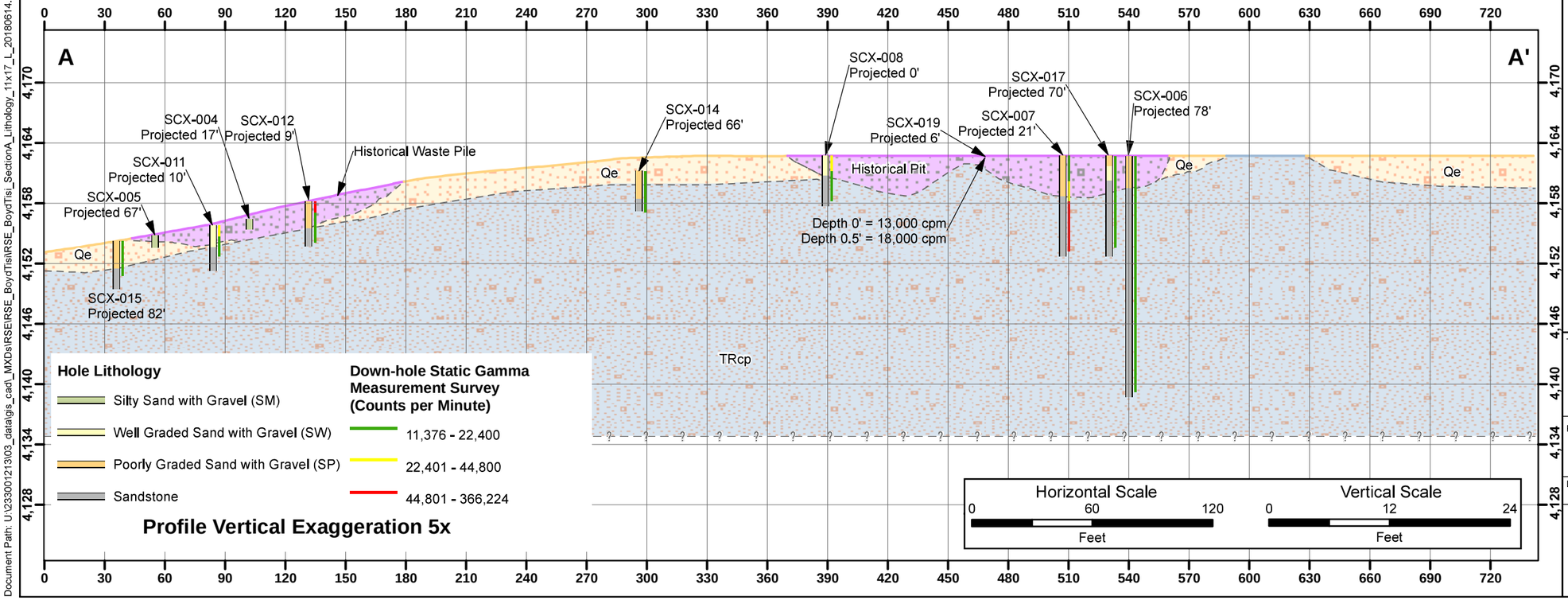

NAVAJO NATION
AUM Environmental Response Trust-First Phase

LEGEND

- Surface and/or Subsurface Borehole Location (SCX; Locations in **Bold** Included in Cross-Section)
- Cross-Section Line
- Estimated Contour for Subsurface Extent of Earthworks (thickness in feet)
- Historical Waste Pile and Pit
- Claim Boundary
- Other Claim Boundary
- Geologic Contact (Inferred)

Site Geology

QUATERNARY

- Subsurface Extent of Earthworks
- Qe: EOLIAN DEPOSITS (HOLOCENE to PLEISTOCENE) - Sand mixed with residual soil, well sorted, forms extensive sand sheet from 0 to greater than 10 ft. thick.

TRIASSIC

- TRcp[1]: Petrified Forest Member – CHINLE FORMATION (UPPER TRIASSIC) – Claystone, siltstone, and minor sandstone, variegated.

NOTES:

1. Bedrock units shown are at surface. Outside of mapped units, bedrock within the claim boundary is generally at 1 to 4 feet below ground surface and overlain by minor residual soils, alluvium, and eolian deposits.

2. Projected distance indicates the distance the borehole was offset from the cross-section line in plan view (not depth) for borehole that are not located on the cross-section line.

REFERENCES:

Coordinate System: NAD 1983 StatePlane Arizona Central FIPS 0202 Feet

Basemap image accessed from BING Maps imagery web mapping service (http://www.bing.com/maps) on 06/2018.

TITLE:

Cross-Section A - A'

PROJECT:

Removal Site Evaluation
Boyd Tisi No. 2 Mine Site

DATE: 6/15/2018

DOCUMENT NAME: Removal Site Evaluation Report

AUTHOR: EDZ

REVIEWER: CBB

Stantec

FIGURE: 2-8a

Document Path: U:\233001213\03_data\gis_cad_MXDs\RSE\RSE_BoydTisi\RSE_BoydTisi_SectionA_Lithology_11x17_L_20180614.mxd

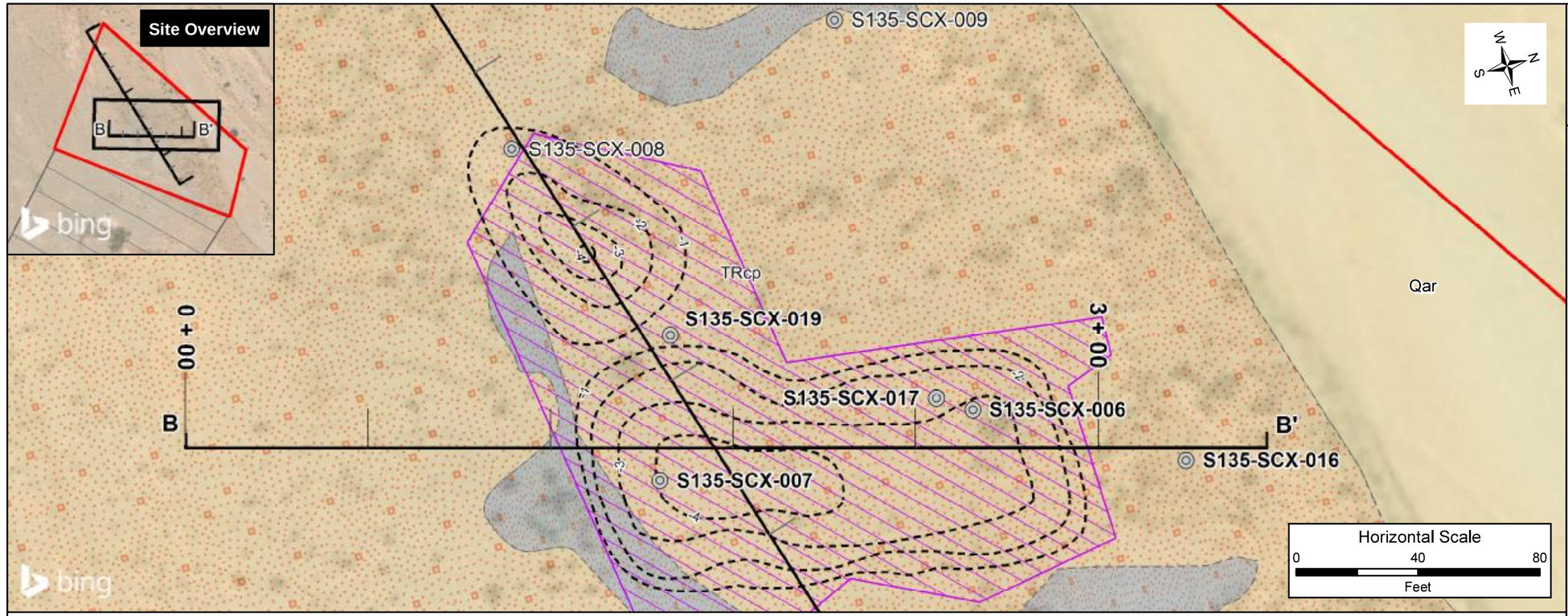

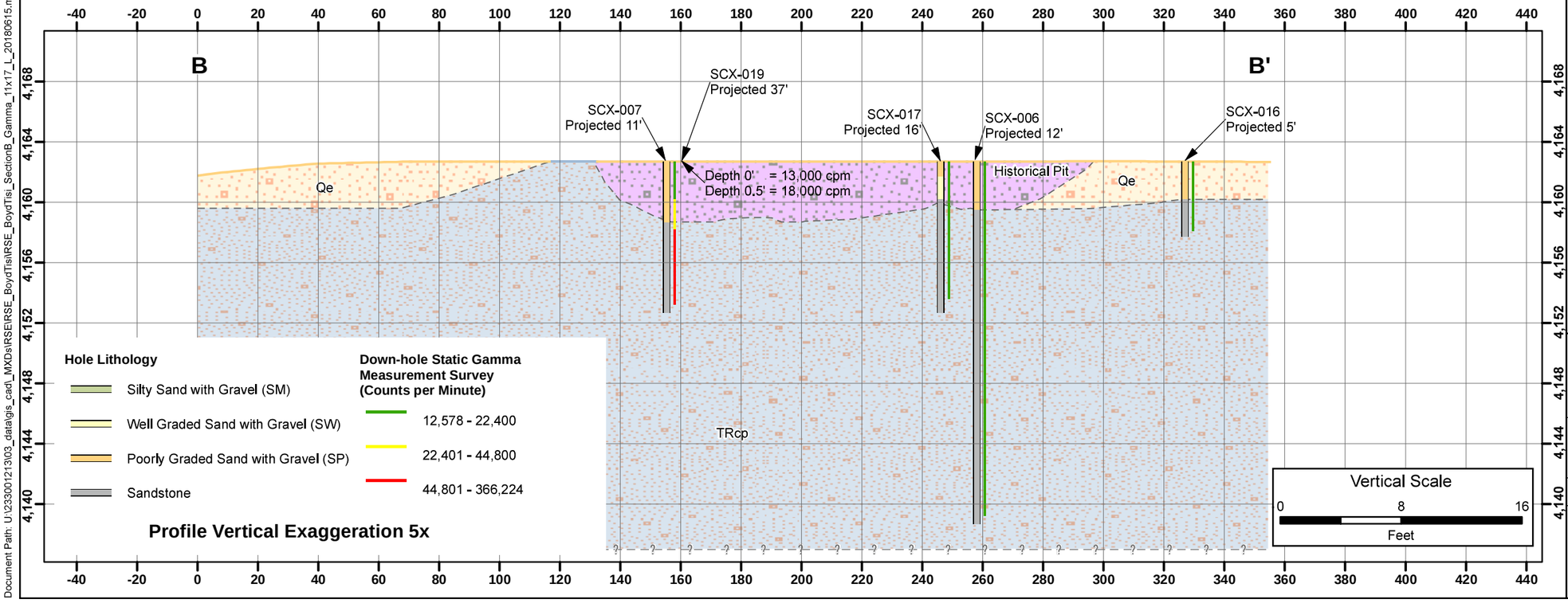

NAVAJO NATION
AUM Environmental Response Trust-First Phase

LEGEND

- Surface and/or Subsurface Borehole Location (SCX; Locations in **Bold** Included in Cross-Section)[2]
- Cross-Section Line
- Estimated Contour for Subsurface Extent of Earthworks (thickness in feet)
- Historical Waste Pile and Pit
- Claim Boundary
- Geologic Contact (Inferred)

Site Geology

QUATERNARY

- Subsurface Extent of Earthworks
- Qar: ALLUVIUM (HOLOCENE) – Sand, silt, and clay with minor inter-bedded gravel. Recent floodplain deposits of the Little Colorado River and tributaries entering from the northeast
- Qe: EOLIAN DEPOSITS (HOLOCENE to PLEISTOCENE) - Sand mixed with residual soil, well sorted, forms extensive sand sheet from 0 to greater than 10 ft. thick.

TRIASSIC

- TRcp[1]: Petrified Forest Member – CHINLE FORMATION (UPPER TRIASSIC) – Claystone, siltstone, and minor sandstone, variegated.

NOTES:

1. Bedrock units shown are at surface. Outside of mapped units, bedrock within the claim boundary is generally at 1 to 4 feet below ground surface and overlain by minor residual soils, alluvium, and eolian deposits.

2. Projected distance indicates the distance the borehole was offset from the cross-section line in plan view (not depth) for borehole that are not located on the cross-section line.

REFERENCES:

Coordinate System: NAD 1983 StatePlane Arizona East FIPS 0201 Feet

Basemap image accessed from BING Maps imagery web mapping service (http://www.bing.com/maps) on 10/2017.

TITLE:
Cross-Section B - B'

PROJECT:
Removal Site Evaluation
Boyd Tisi No. 2 Mine Site

DATE: 6/15/2018

DOCUMENT NAME: Removal Site Evaluation Report

AUTHOR: CBB

REVIEWER: TO

FIGURE: 2-8b

Stantec

Document Path: U:\233001213\03_data\gis_cad_MXDs\RSE\RSE_BoydTisi\RSE_BoydTisi_SectionB_Gamma_11x17_L_20180615.mxd

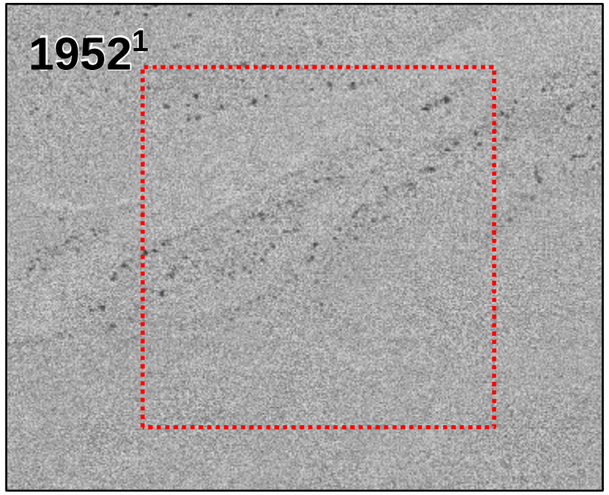

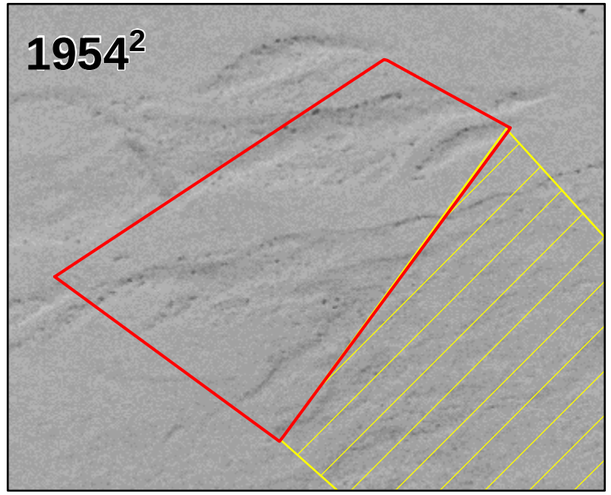

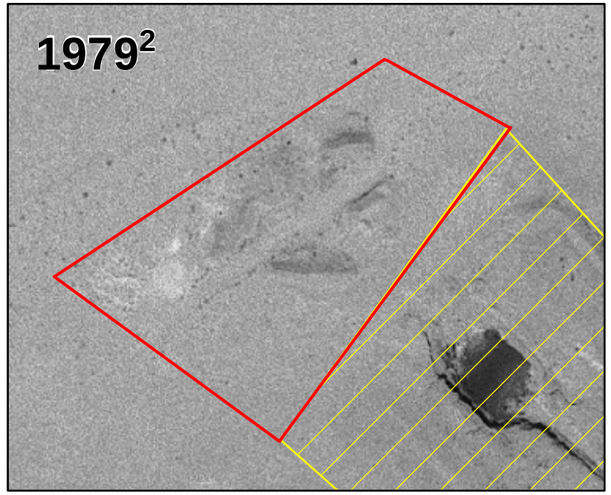

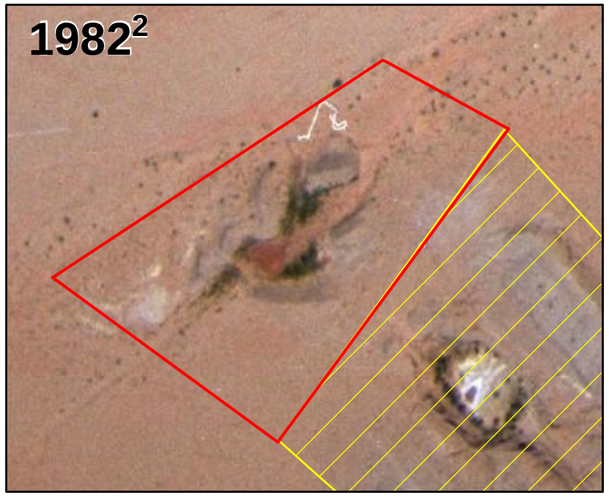

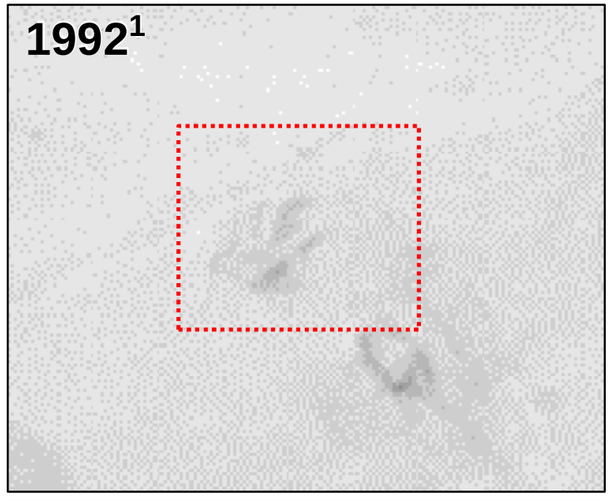

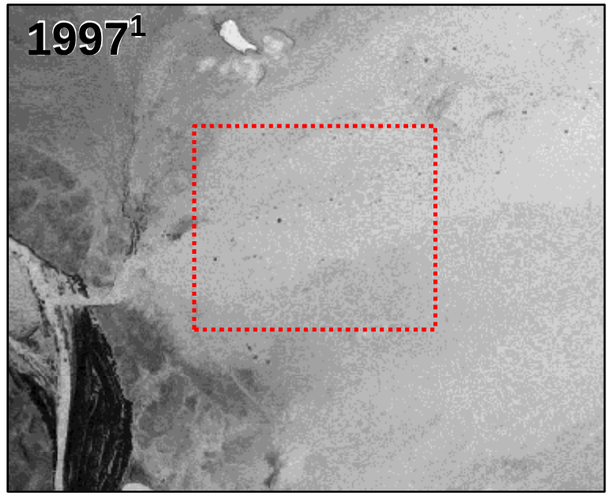

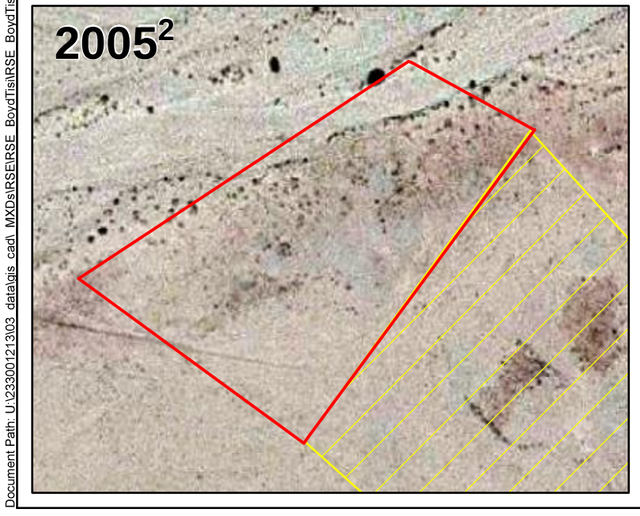

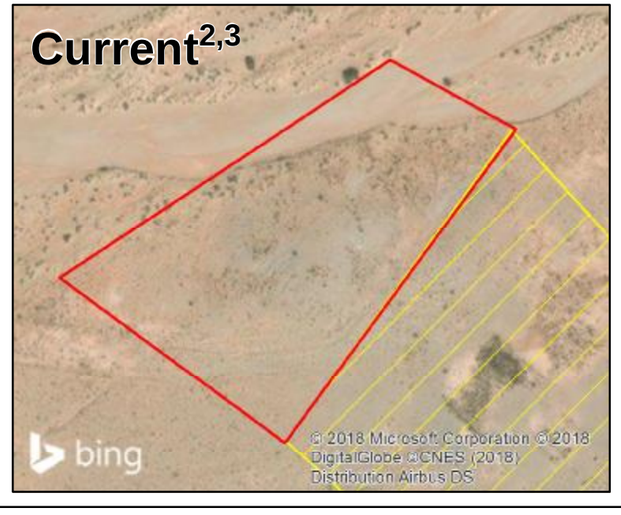

NAVAJO NATION
AUM Environmental Response Trust-First Phase

LEGEND

- Approximate Site Location, not georeferenced
- Boyd Tisi No. 2 Claim Boundary
- Juan Horse No. 3 Claim Boundary

NOTES:

1. Image is not georeferenced, scale not available.

2. Image is georeferenced. Scale bar applies to these image frames only.

3. Current image accessed from BING Maps imagery web mapping service (http://www.bing.com/maps) on 06/2018.

REFERENCES:

Coordinate System: NAD 1983 UTM Zone 12N

Historical Aerial Imagery, with the exception of 1982, downloaded from fttps://earthexplorer.usgs.gov/ on January 23, 2017. EPA provided the 1982 photograph, which was then georeferenced based on BING image.

N
W E
S

0 300 600
Feet

TITLE:
Historical Aerial Photograph Comparison

PROJECT:
Removal Site Evaluation
Boyd Tisi No. 2 Mine Site

DATE: 6/13/2018

DOCUMENT NAME: Removal Site Evaluation Report

AUTHOR: EDZ

REVIEWER: CBB

FIGURE: 3-1a

Stantec

Document Path: U:\233001213\03_data\gis_cad_MXDs\RSE\RSE_BoydTisi\RSE_BoydTisi_Historical_Aerial_Compilation_11x17_L_20180612.mxd

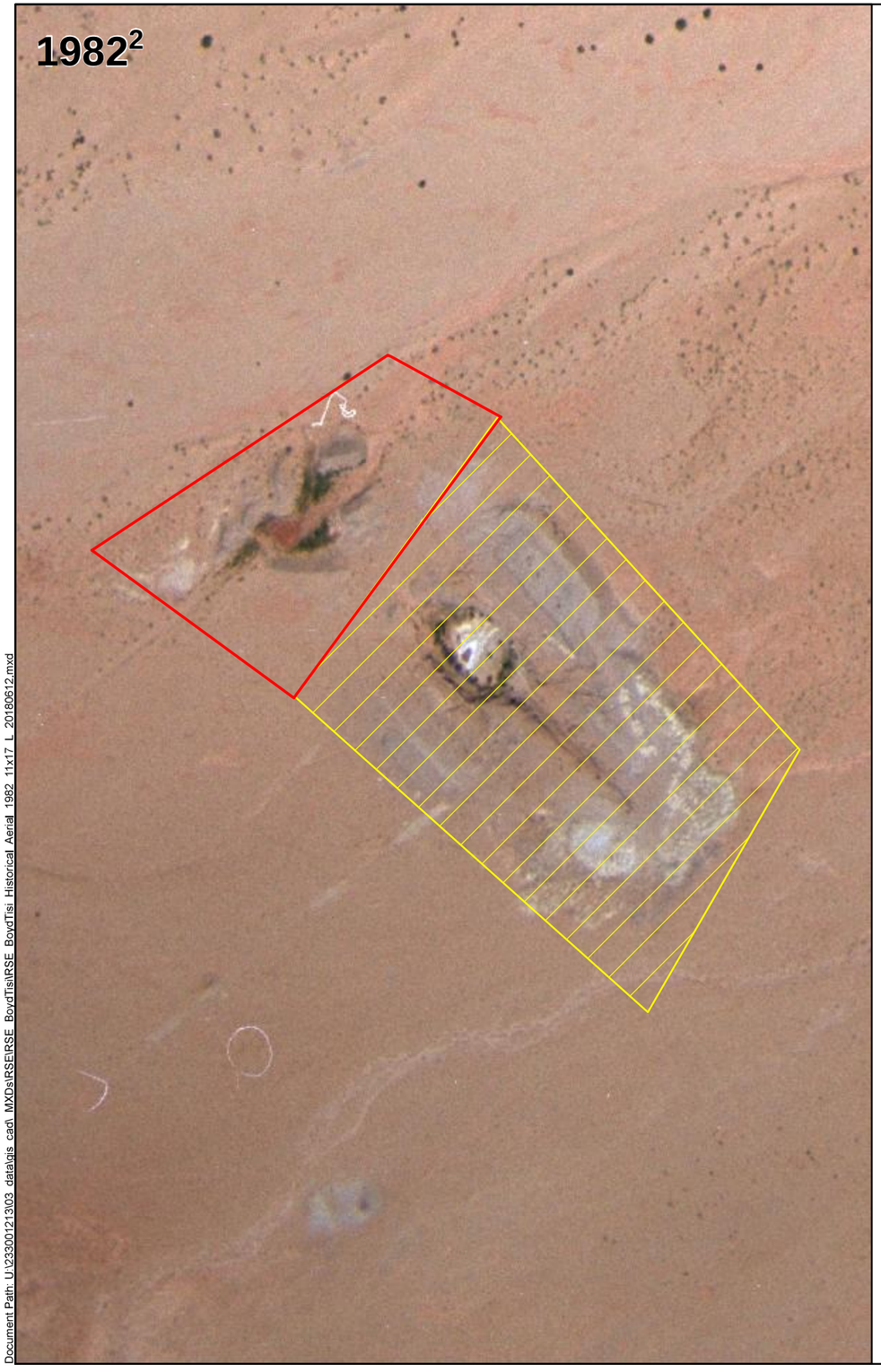



NAVAJO NATION
AUM Environmental Response Trust-First Phase

LEGEND

- Boyd Tisi No. 2 Claim Boundary
- Juan Horse No. 3 Claim Boundary

REFERENCES:

1. Coordinate System: NAD 1983 UTM Zone 12N

2. 1982 aerial image was provided by the EPA and georeferenced using current image from BING (03/2016).

3. Current image accessed from BING Maps imagery web mapping service (http://www.bing.com/maps) on 06/2018.

N
W E
S

0 300 600
Feet

TITLE:
1982 Historical Aerial Photograph Comparison

PROJECT:
Removal Site Evaluation
Boyd Tisi No. 2 Mine Site

DATE: 6/15/2018

DOCUMENT NAME: Removal Site Evaluation Report

AUTHOR: CBB

REVIEWER: EDZ

Stantec

FIGURE: 3-1b

Document Path: U:\233001213\03 data\gis cad\ MXDs\RSE\RSE BoydTisi\RSE BoydTisi Historical Aerial 1982 11x17 L 20180612.mxd



NAVAJO NATION
AUM Environmental
Response Trust-First Phase

LEGEND

- Potential Background Reference Area
- Claim Boundary
- Other Claim Boundary

REFERENCES:

Coordinate System: NAD 1983 UTM Zone 12N

Basemap image accessed from BING Maps imagery web mapping service (http://www.bing.com/maps) on 09/2018.

N
W E
S

0 300 600
Feet

TITLE:

Potential Background Reference Areas

PROJECT:

Removal Site Evaluation
Boyd Tisi No. 2 Mine Site

DATE: 9/11/2018

DOCUMENT NAME: Removal Site Evaluation Report

AUTHOR: CBB

REVIEWER: EDZ

FIGURE: 3-2

Stantec

Document Path: U:\233001213\03 data\gis cad\ MXDs\RSE\RSE_BoydTisi\RSE_BoydTisiBackground Areas 11x17 L 20180612.mxd

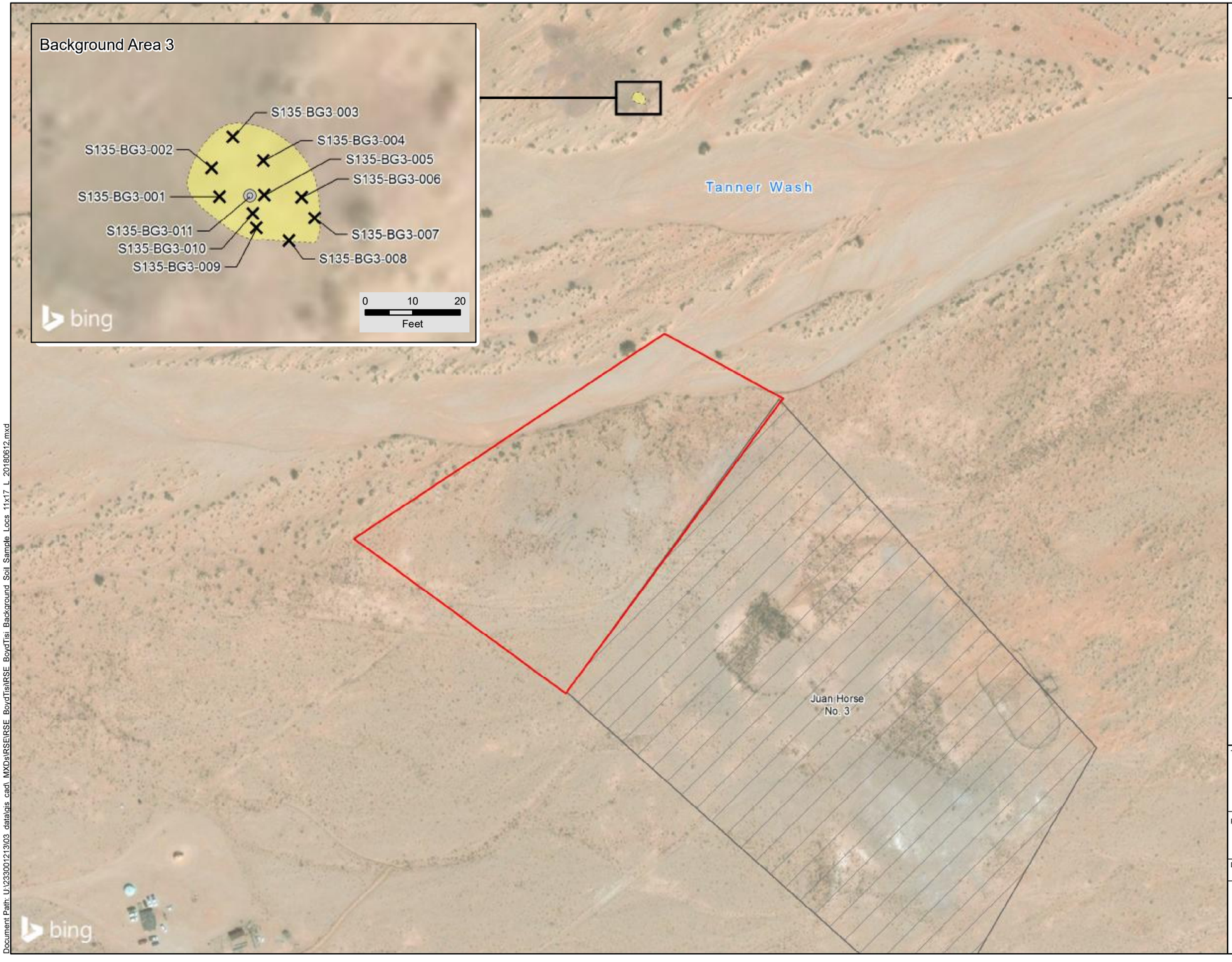

NAVAJO NATION
AUM Environmental
Response Trust-First Phase

LEGEND

- Surface Sample Location
- Borehole Location - Surface and Subsurface Sample
- Background Reference Area
- Claim Boundary
- Other Claim Boundary

REFERENCES:
Coordinate System: NAD 1983 UTM Zone 12N

Basemap image accessed from BING Maps imagery web mapping service (http://www.bing.com/maps) on 09/2018.

N
W E
S
0 200 400
Feet

TITLE:
Background Reference Area - Sample Locations

PROJECT:
Removal Site Evaluation
Boyd Tisi No. 2 Mine Site

DATE: 9/11/2018

DOCUMENT NAME: Removal Site Evaluation Report

Stantec

AUTHOR: CBB
REVIEWER: EDZ

FIGURE: 3-3

Document Path: U:\233901213\03_data\gis_cad_MXDs\RSE\RSE_BoydTisi\RSE_BoydTisi_Background_Soil_Sample_Locs_11x17_L_20180612.mxd

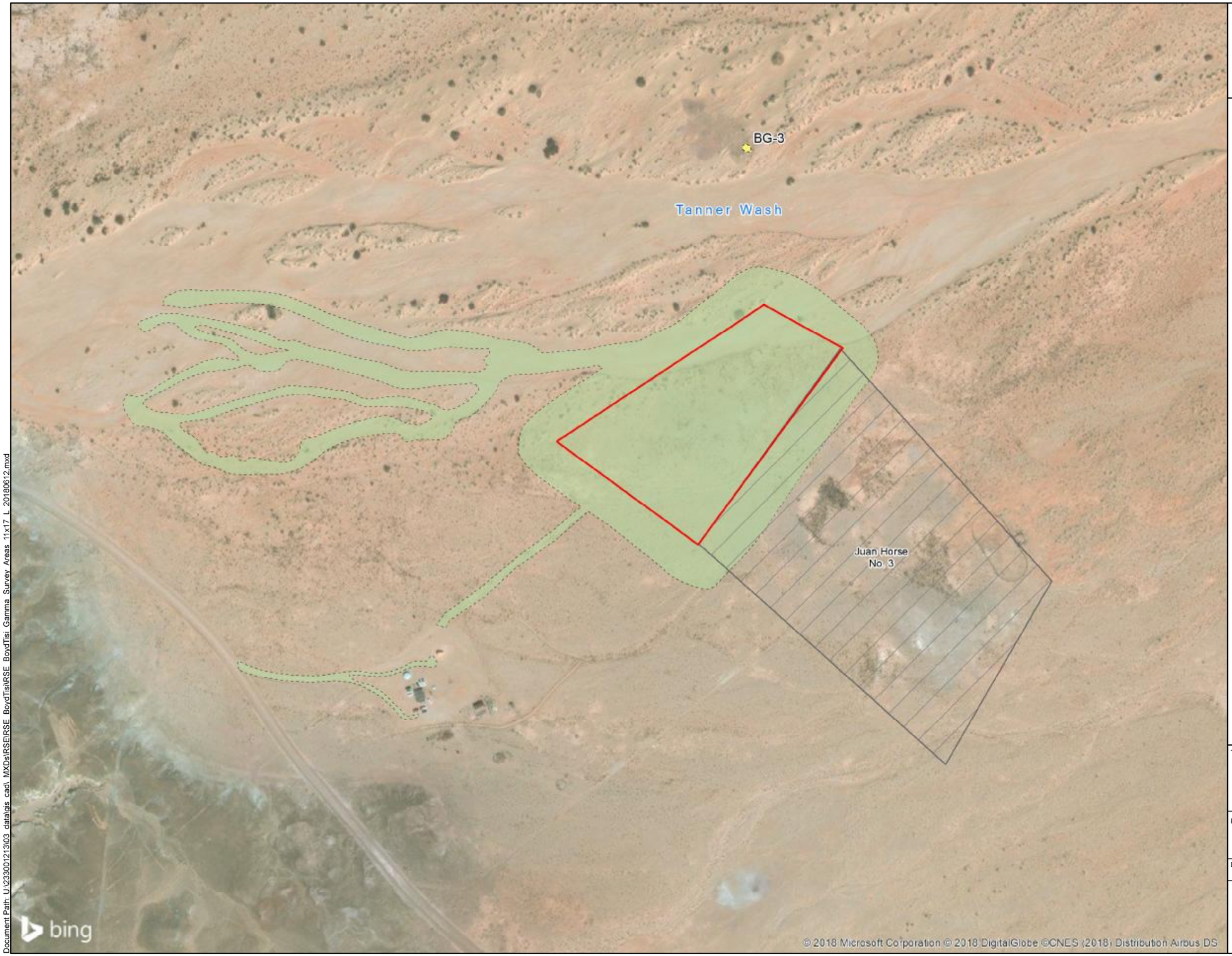

NAVAJO NATION
AUM Environmental
Response Trust-First Phase

LEGEND

- Background Reference Area
- Gamma Radiation Survey Area
- Claim Boundary
- Other Claim Boundary

NOTE:
Gamma survey area is approximately 21.2 acres.

REFERENCES:
Coordinate System: NAD 1983 UTM Zone 12N

Basemap image accessed from BING Maps imagery web mapping service (http://www.bing.com/maps) on 09/2018.

N
W E
S

0 300 600
Feet

TITLE:
Gamma Radiation Survey Area

PROJECT:
Removal Site Evaluation
Boyd Tisi No. 2 Mine Site

DATE: 9/11/2018

DOCUMENT NAME: Removal Site Evaluation Report

AUTHOR: CBB

REVIEWER: EDZ

FIGURE: 3-4

Stantec

Document Path: U:\233001213\03_data\gis_cad_MXDs\RSE\RSE_BoydTisi\RSE_BoydTisi_Gamma_Survey_Areas_11x17_L_20180612.mxd

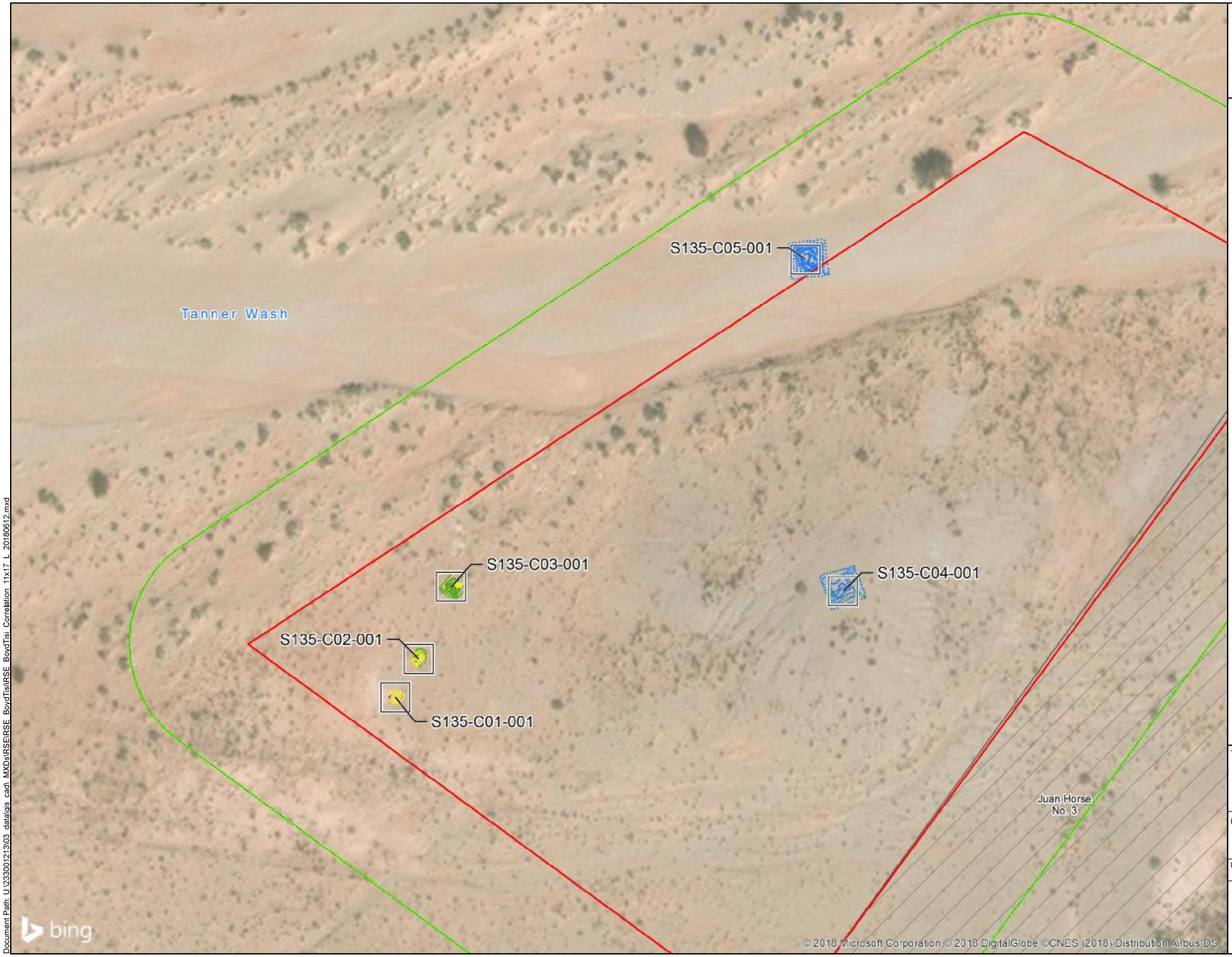

NAVAJO NATION
AUM Environmental
Response Trust-First Phase

LEGEND

- S135-C01-001 Correlation Location (30' x 30')
- Claim Boundary
- 100-Foot Claim Buffer
- Other Claim Boundary

Gamma Survey

Counts per Minute (CPM)

- 7,670 - 14,373 (Minimum to BG-3 UTL)
- 14,374 - 28,746 (>BG-3 UTL to 2x BG-3 UTL)
- 28,747 - 71,865 (>2x BG-3 UTL to 5x BG-3 UTL)
- 71,866 - 93,363 (>5x BG-3 UTL to Maximum)

NOTE:

Each correlation sample consists of five grab samples collected from 0.0 - 0.5 feet below ground surface, composited together for laboratory analysis.

REFERENCES:

Coordinate System: NAD 1983 UTM Zone 12N

Basemap image accessed from BING Maps imagery web mapping service (http://www.bing.com/maps) on 10/2017.

N W E S

0 80 160

Feet

TITLE:

Gamma Correlation Study Locations

PROJECT:

Removal Site Evaluation
Boyd Tisi No. 2 Mine Site

DATE: 9/11/2018

DOCUMENT NAME: Removal Site Evaluation Report

AUTHOR: CBB

REVIEWER: EDZ

Stantec

FIGURE: 3-5

Document Path: U:\233001213\03_data\gis_cad_MXDs\RSE\RSE_BoydTisi\RSE_BoydTisi_Correlation_11x17_L_20180612.mxd

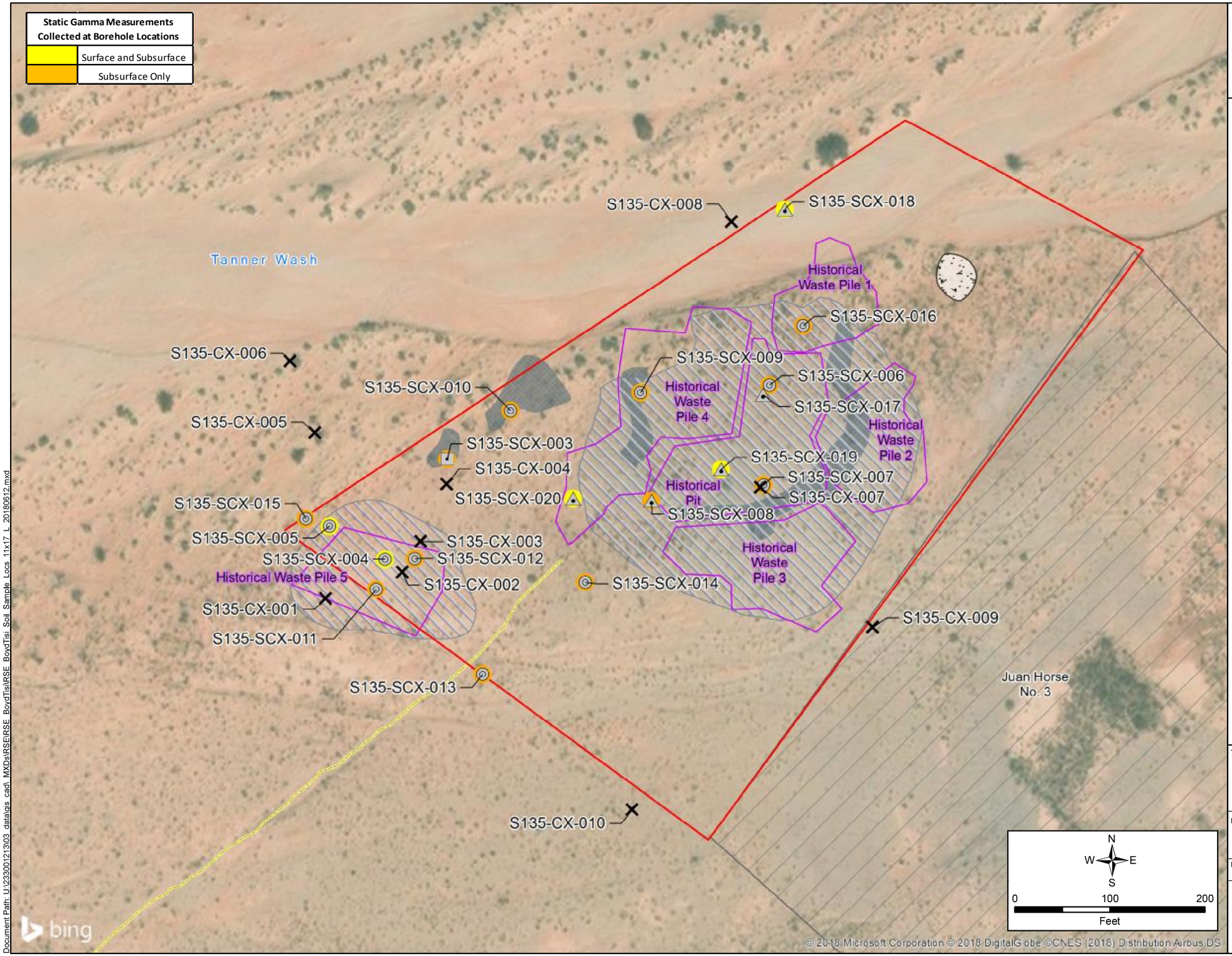

NAVAJO NATION
AUM Environmental Response Trust-First Phase

LEGEND

- Surface Sample Location
- Borehole Location - Surface and Subsurface Samples
- Borehole Location - Surface Samples Only
- Borehole Location - Static Gamma Data Only
- Potential Haul Road
- Historical Waste Pile and Pit[1]
- Debris
- Reclaimed Area
- Claim Boundary
- Other Claim Boundary
- TRcp: Petrified Forest Member – CHINLE FORMATION (UPPER TRIASSIC) – Claystone, siltstone, and minor sandstone, variegated.

NOTES:

1. Location of historical waste piles and pit should be considered approximate. Georeference was based on the coordinate grid provided on historical drawing. Claim boundary on the historical drawing deviated from current claim boundary (refer to Figure 2-2).

2. Surface samples range from 0.0 - 0.5 feet below ground surface (ft bgs)

3. Subsurface samples range from 0.5 - 24.0 ft bgs

4. Static gamma measurements range from 0.0 - 23.5 ft bgs

REFERENCES:

Coordinate System: NAD 1983 UTM Zone 12N

Basemap image accessed from BING Maps imagery web mapping service (http://www.bing.com/maps) on 10/2018.

TITLE:

Site Characterization Surface and Subsurface Sample Locations

PROJECT:

Removal Site Evaluation
Boyd Tisi No. 2 Mine Site

DATE: 10/22/2018

DOCUMENT NAME: Removal Site Evaluation Report

AUTHOR: CBB

REVIEWER: EDZ

Stantec

FIGURE: 3-6

Document Path: U:\233001213\03_data\gis_cad_MXDs\RSE\RSE_BoydTisi\RSE_BoydTisiSoil_Sample_Locs_11x17_L_20180612.mxd

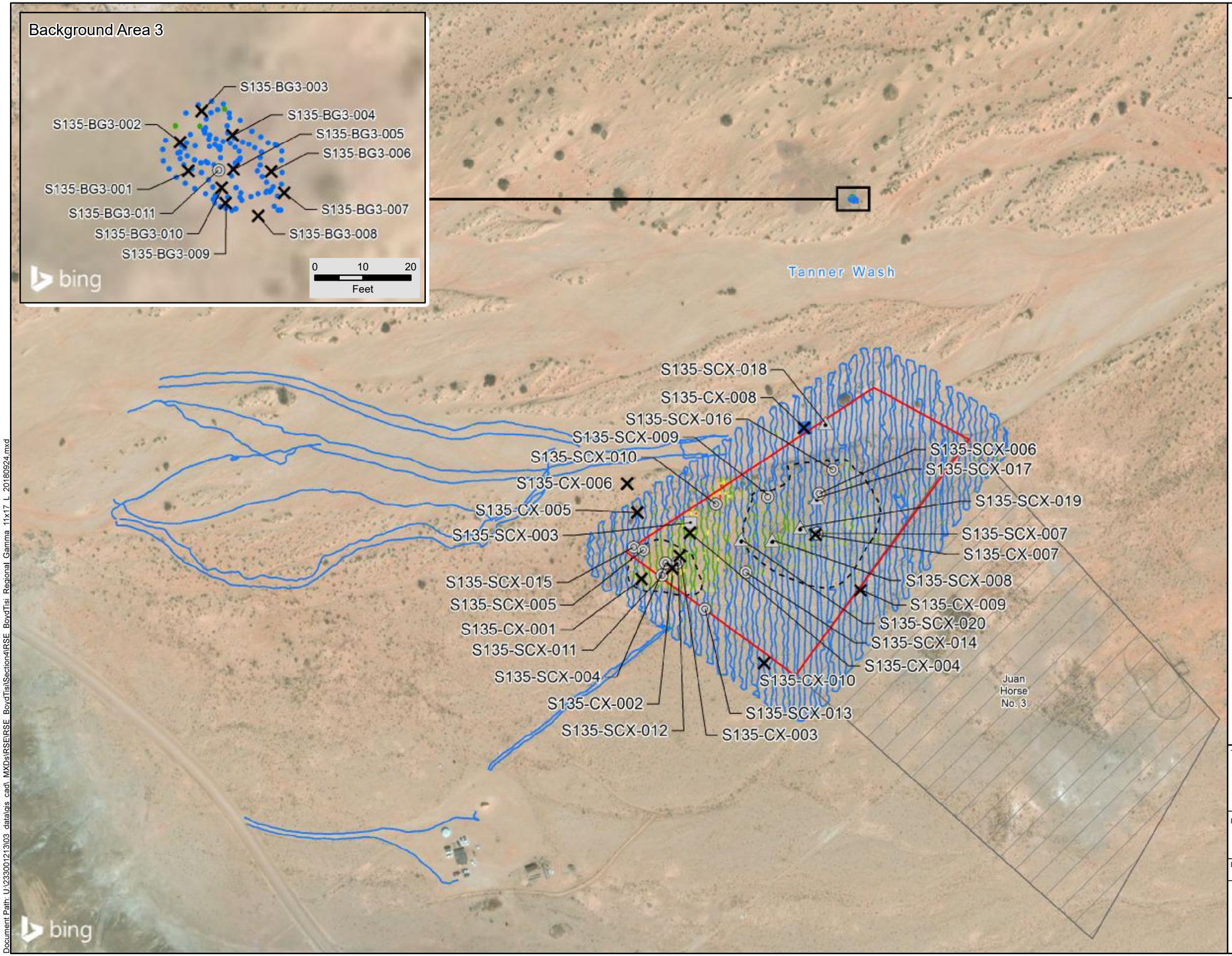

NAVAJO NATION
AUM Environmental
Response Trust-First Phase

LEGEND

- Surface Sample Location
- Borehole Location - Surface and Subsurface Samples
- Borehole Location - Surface Samples Only
- Borehole Location - Static Gamma Data Only
- Claim Boundary
- Other Claim Boundary
- Reclaimed Area

Gamma Survey

Counts per Minute (CPM)

- 7,670 - 14,373 (Minimum to BG-3 IL)
- 14,374 - 28,746 (BG-3 IL to 2x BG-3 IL)
- 28,747 - 71,865 (2x BG-3 IL to 5x BG-3 IL)
- 71,866 - 93,363 (5x BG-3 IL to Maximum)

REFERENCES:

Coordinate System: NAD 1983 UTM Zone 12N

Basemap image accessed from BING Maps imagery web mapping service (http://www.bing.com/maps) on 10/2017.

N
W E
S

0 250 500
Feet

TITLE:

Gamma Radiation Survey Results

PROJECT:

Removal Site Evaluation
Boyd Tisi No. 2 Mine Site

DATE:	DOCUMENT NAME:
9/29/2018	Removal Site Evaluation Report
	AUTHOR: CBB / REVIEWER: EDZ
Stantec	FIGURE: 4-1

Document Path: U:\233001213\03_data\gis_cad_MXDs\RSE\RSE_BoydTisiSection4\RSE_BoydTisi_Regional_Gamma_11x17_L_20180924.mxd

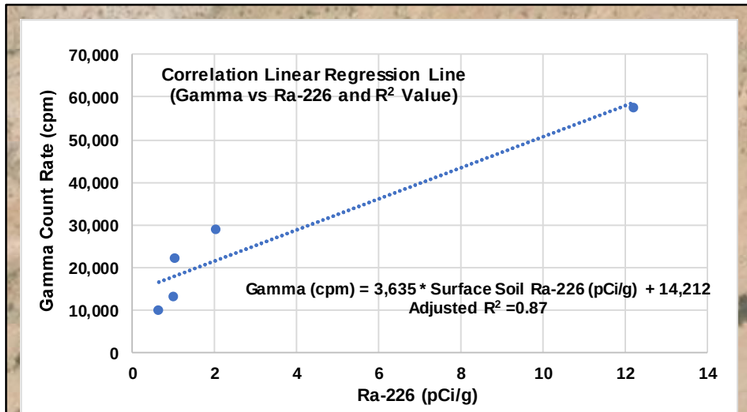

Correlation Data

Sample ID	Ra-226 (pCi/g)	Mean Gamma Count Rate (cpm)[1]
S135-C01-001	12.2	57,665
S135-C02-001	2.02	28,943
S135-C03-001	1.04	22,364
S135-C04-001	0.98	13,211
S135-C05-001	0.64	10,241

[1] Average gamma count rate for a correlation

NOTES:

1. Surface gamma survey measurements were converted to predicted Ra-226 concentrations using the following correlation equation:
Gamma (cpm) = 3,635 x Surface Soil Ra-226 (pCi/g) + 14,212

2. The correlation equation predicted Ra-226 concentrations that are less than zero for gamma survey measurements less than 14,212 cpm.

3. Mean (μ) of predicted concentrations of Ra-226 in soil (-0.5 pCi/g)

4. Standard deviation (σ) of predicted concentrations of Ra-226 in soil (0.9 pCi/g)

5. Ra-226 concentrations predicted from gamma measurements exceeding approximately 57,500 CPM or less than approximately 10,000 CPM are extrapolated from the regression model and are uncertain.

REFERENCES:

Coordinate System: NAD 1983 UTM Zone 12N

Basemap image accessed from BING Maps imagery web mapping service (http://www.bing.com/maps) on 10/2017.

NAVAJO NATION
AUM Environmental Response Trust-First Phase

LEGEND

S135-C01-001
Correlation Location (30' x 30')

Claim Boundary

Other Claim Boundary

Predicted Ra-226 Concentration[1](pCi/g)

- -1.7 - -0.5 (μ)[2,3]
- -0.4 - 0[2]
- 0 - 0.4 (μ + 1σ[4])
- 0.5 - 1.3 (μ + 2σ)
- 1.4 - 2.2 (μ + 3σ)
- 2.3 - 21.8

N
W E
S

0 300 600
Feet

TITLE:
Predicted Concentrations of Ra-226 in Soil Using the Correlation Equation

PROJECT:
Removal Site Evaluation
Boyd Tisi No. 2 Mine Site

DATE: 10/2/2018

DOCUMENT NAME: Removal Site Evaluation Report

AUTHOR: CBB

REVIEWER: EDZ

FIGURE: 4-2a

Stantec

Document Path: U:\233001213\03 data\gis cad\ MXDs\RSE\RSE BoydTisiSection4\RSE BoydTisi Radium 11x17 L 20180928.mxd

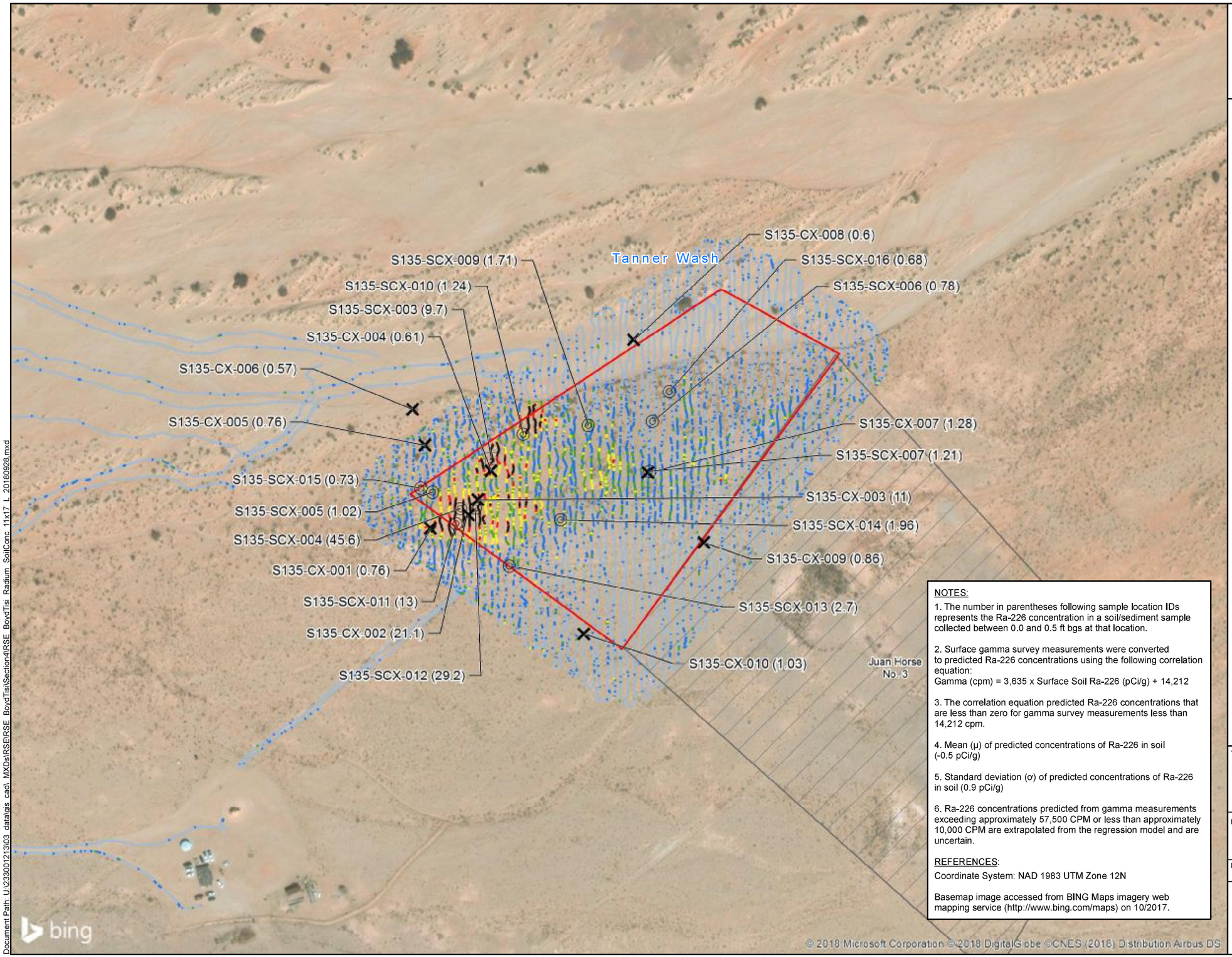

NAVAJO NATION
AUM Environmental Response Trust-First Phase

LEGEND

- Surface Sample Location
- Borehole Location - Surface and Subsurface Samples
- Borehole Location - Surface Samples Only
- Claim Boundary
- Other Claim Boundary

Predicted Ra-226 Concentration[2](pCi/g)

- -1.7 - -0.5 (μ)[3,4]
- -0.4 - 0[3]
- 0 - 0.4 ($\mu + 1\sigma$[5])
- 0.5 - 1.3 ($\mu + 2\sigma$)
- 1.4 - 2.2 ($\mu + 3\sigma$)
- 2.3 - 21.8

N
W E
S

0 200 400
Feet

NOTES:

1. The number in parentheses following sample location IDs represents the Ra-226 concentration in a soil/sediment sample collected between 0.0 and 0.5 ft bgs at that location.

2. Surface gamma survey measurements were converted to predicted Ra-226 concentrations using the following correlation equation:
Gamma (cpm) = 3,635 x Surface Soil Ra-226 (pCi/g) + 14,212

3. The correlation equation predicted Ra-226 concentrations that are less than zero for gamma survey measurements less than 14,212 cpm.

4. Mean (μ) of predicted concentrations of Ra-226 in soil (-0.5 pCi/g)

5. Standard deviation (σ) of predicted concentrations of Ra-226 in soil (0.9 pCi/g)

6. Ra-226 concentrations predicted from gamma measurements exceeding approximately 57,500 CPM or less than approximately 10,000 CPM are extrapolated from the regression model and are uncertain.

REFERENCES:

Coordinate System: NAD 1983 UTM Zone 12N

Basemap image accessed from BING Maps imagery web mapping service (http://www.bing.com/maps) on 10/2017.

TITLE:
Predicted Ra-226 Concentrations in Soil Compared to Ra-226 Concentrations in Soil/Sediment

PROJECT:
Removal Site Evaluation
Boyd Tisi No. 2 Mine Site

DATE: 10/1/2018

DOCUMENT NAME: Removal Site Evaluation Report

AUTHOR: CBB

REVIEWER: EDZ

FIGURE: 4-2b

Stantec

Document Path: U:\233001213\03 data\gis cad\ MXDs\RSE\RSE BoydTisiSection4\RSE BoydTisi Radium SoilConc 11x17 L 20180928.mxd

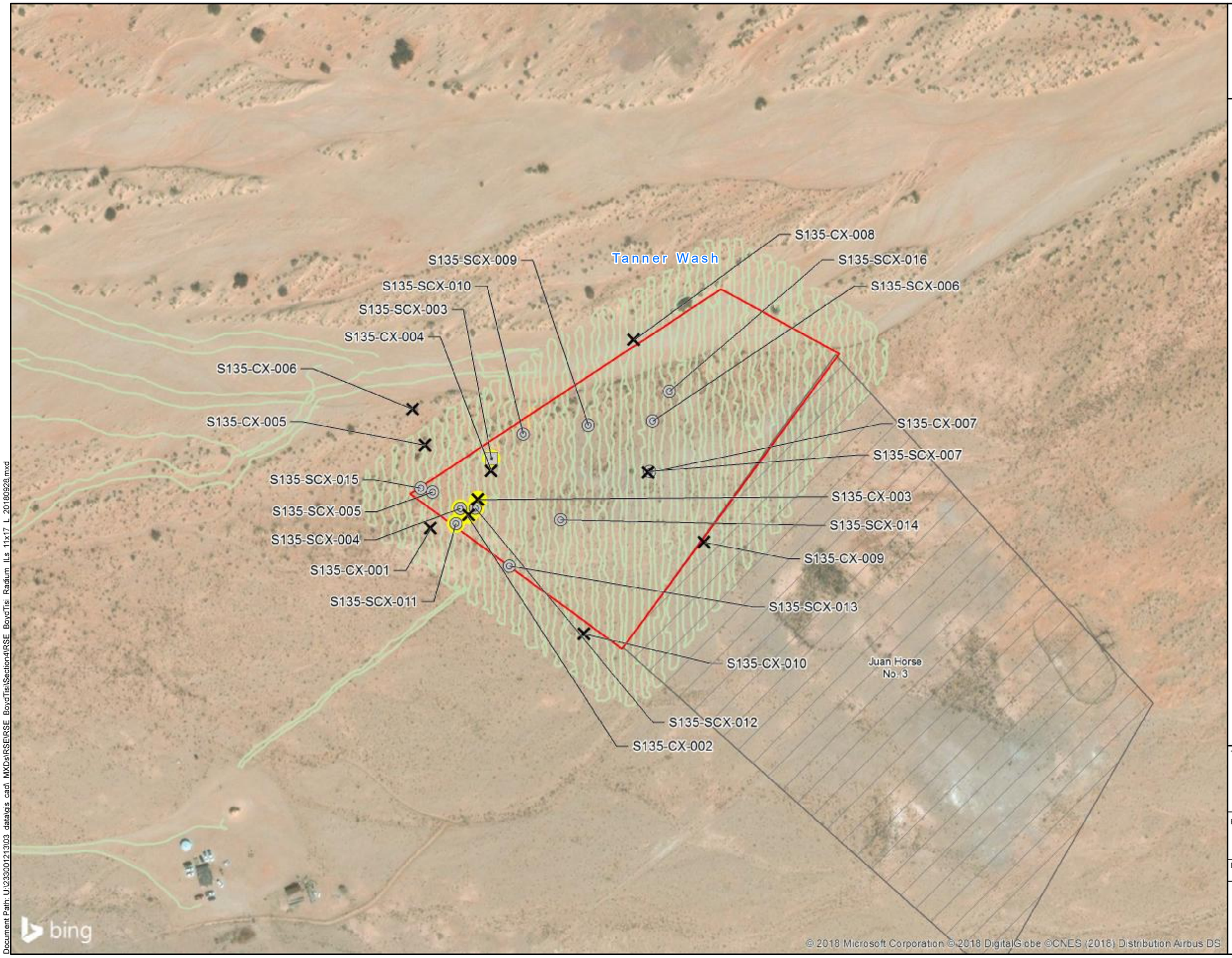

NAVAJO NATION
AUM Environmental
Response Trust-First Phase

LEGEND

- Surface Sample Location
- Borehole Location - Surface and Subsurface Samples
- Borehole Location - Surface Samples Only
- Ra-226 IL Exceedance in Surface Soil
- Claim Boundary
- Other Claim Boundary

Predicted Ra-226 Concentration (pCi/g)

- IL Not Exceeded Survey Area: -1.6 - 5.45
- IL Exceeded Survey Area: 5.46 - 21.8

NOTES:

1. Surface gamma survey measurements were converted to predicted Ra-226 concentrations using the following correlation equation:
Gamma (cpm) = 3,635 x Surface Soil Ra-226 (pCi/g) + 14,212

REFERENCES:

Coordinate System: NAD 1983 UTM Zone 12N

Basemap image accessed from BING Maps imagery web mapping service (http://www.bing.com/maps) on 10/2017.

N
W E
S

0 200 400
Feet

TITLE:

Predicted Ra-226 Concentrations in Soil Compared to Ra-226 ILs

PROJECT:
Removal Site Evaluation
Boyd Tisi No. 2 Mine Site

DATE: 9/28/2018

DOCUMENT NAME: Removal Site Evaluation Report

AUTHOR: CBB

REVIEWER: EDZ

Stantec

FIGURE: 4-2c

Document Path: U:\233001213\03_data\gis_cad_MXDs\RSE\RSE_BoydTisiSection4\RSE_BoydTisi_Radium_ILs_11x17_L_20180928.mxd

Soil and Sediment Investigation Levels (IL)	
Analyte (Units)	**Investigation Level**
Metals (mg/kg)	
Arsenic (As)	2.51
Molybdenum (Mo)	0.577
Selenium (Se)	NA
Uranium (U)	34.1
Vanadium (V)	51.5
Radionuclides (pCi/g)	**Investigation Level**
Radium-226 (Ra)	5.45
NA - An investigation level for selenium was not identified because selenium sample results in BG-3 were all non-detect.	

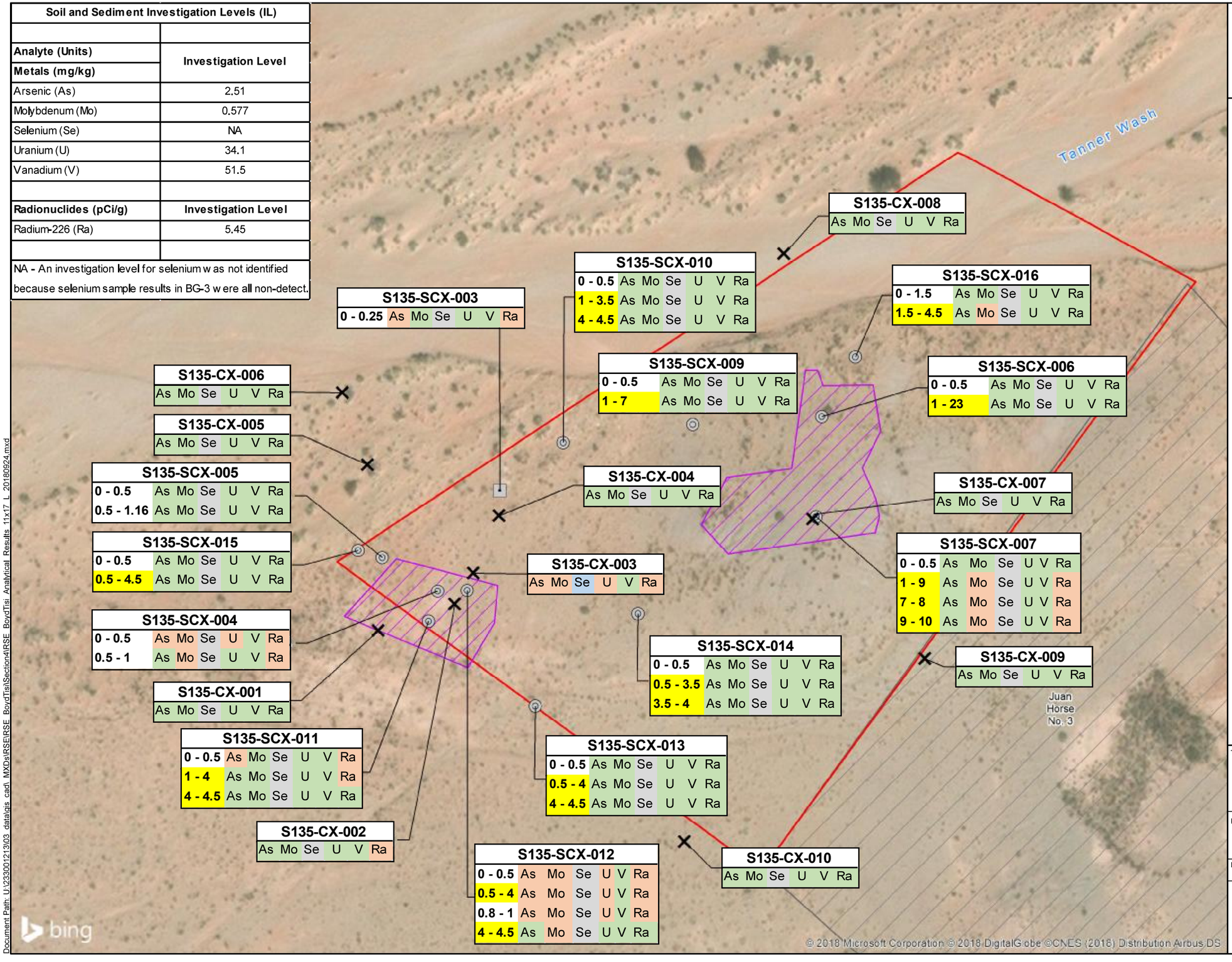

NAVAJO NATION
AUM Environmental Response Trust-First Phase

LEGEND

- Surface Sample Location
- Borehole Location - Surface and Subsurface Samples
- Borehole Location - Surface Samples Only
- Historical Waste Pile and Pit
- Claim Boundary
- Other Claim Boundary

- Investigation Level Not Exceeded
- Investigation Level Exceeded
- Analyte Detected - No Investigation Level[1]
- Non-detect - No Investigation Level[1]

NOTES:

1. No Investigation Level – Analyte was not detected in corresponding background reference area.

2. Highlighted sample intervals are partially or completely within bedrock.

REFERENCES:

Coordinate System: NAD 1983 UTM Zone 12N

Basemap image accessed from BING Maps imagery web mapping service (http://www.bing.com/maps) on 10/2017.

N W E S

0 100 200

Feet

TITLE:

Surface and Subsurface Metals and Ra-226 Analytical Results

PROJECT:

Removal Site Evaluation
Boyd Tisi No. 2 Mine Site

DATE: 10/2/2018

DOCUMENT NAME: Removal Site Evaluation Report

AUTHOR: CBB

REVIEWER: EDZ

Stantec

FIGURE: 4-3

Document Path: U:\233001213\03_data\gis_cad_MXDs\RSE\RSE_BoydTisiSection4\RSE_BoydTisi_Analytical_Results_11x17_L_20180924.mxd

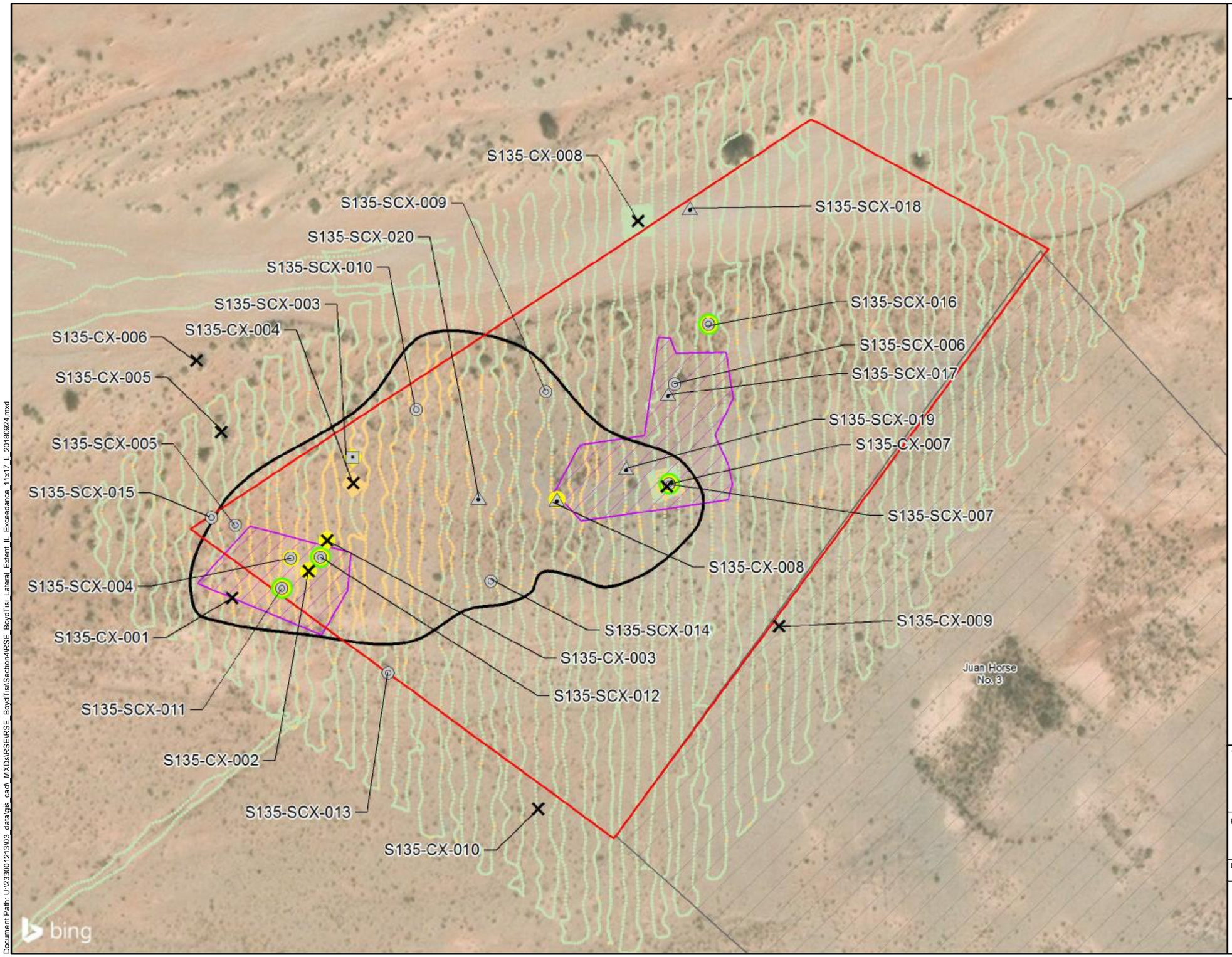

NAVAJO NATION
AUM Environmental Response Trust-First Phase

LEGEND

- Surface Sample Location
- Borehole Location - Surface and Subsurface Samples
- Borehole Location - Surface Samples Only
- Borehole Location - Static Gamma Data Only
- IL Exceedance in Unconsolidated Material in Borehole
- IL Exceedance in Bedrock in Borehole
- Approximate Area where Static Gamma IL is Exceeded (2.5 acres)
- Historical Waste Pile and Pit
- Claim Boundary
- Other Claim Boundary

Gamma Survey

Counts per Minute (CPM)

- 7,670 - 14,373 (IL Not Exceeded; 18.7 acres)
- 14,374 - 93,363 (IL Exceeded; 2.5 acres)

REFERENCES:

Coordinate System: NAD 1983 UTM Zone 12N

Basemap image accessed from BING Maps imagery web mapping service (http://www.bing.com/maps) on 10/2017.

N W E S

0 100 200

Feet

TITLE:

Lateral Extent of Surface and Subsurface IL Exceedances

PROJECT:

Removal Site Evaluation
Boyd Tisi No. 2 Mine Site

DATE: 9/25/2018

DOCUMENT NAME: Removal Site Evaluation Report

Stantec

AUTHOR: CBB | REVIEWER: EDZ

FIGURE: 4-4

Document Path: U:\233001213\03 data\gis_cad_MXDs\RSE\RSE_BoydTisi\Section4\RSE_BoydTisi_Lateral_Extent_IL_Exceedance_11x17_L_20180924.mxd

NOTES:

1. Range of IL Exceedances in Unconsolidated Material selected based on soil analytical results, subsurface gamma measurements, and subsurface observations.

2. Subsurface static gamma measurements are compared to the subsurface static gamma ILs.

3. NA = Not Applicable, subsurface soil does not exceed IL.

REFERENCES:

Coordinate System: NAD 1983 UTM Zone 12N

Basemap image accessed from BING Maps imagery web mapping service (http://www.bing.com/maps) on 10/2017.

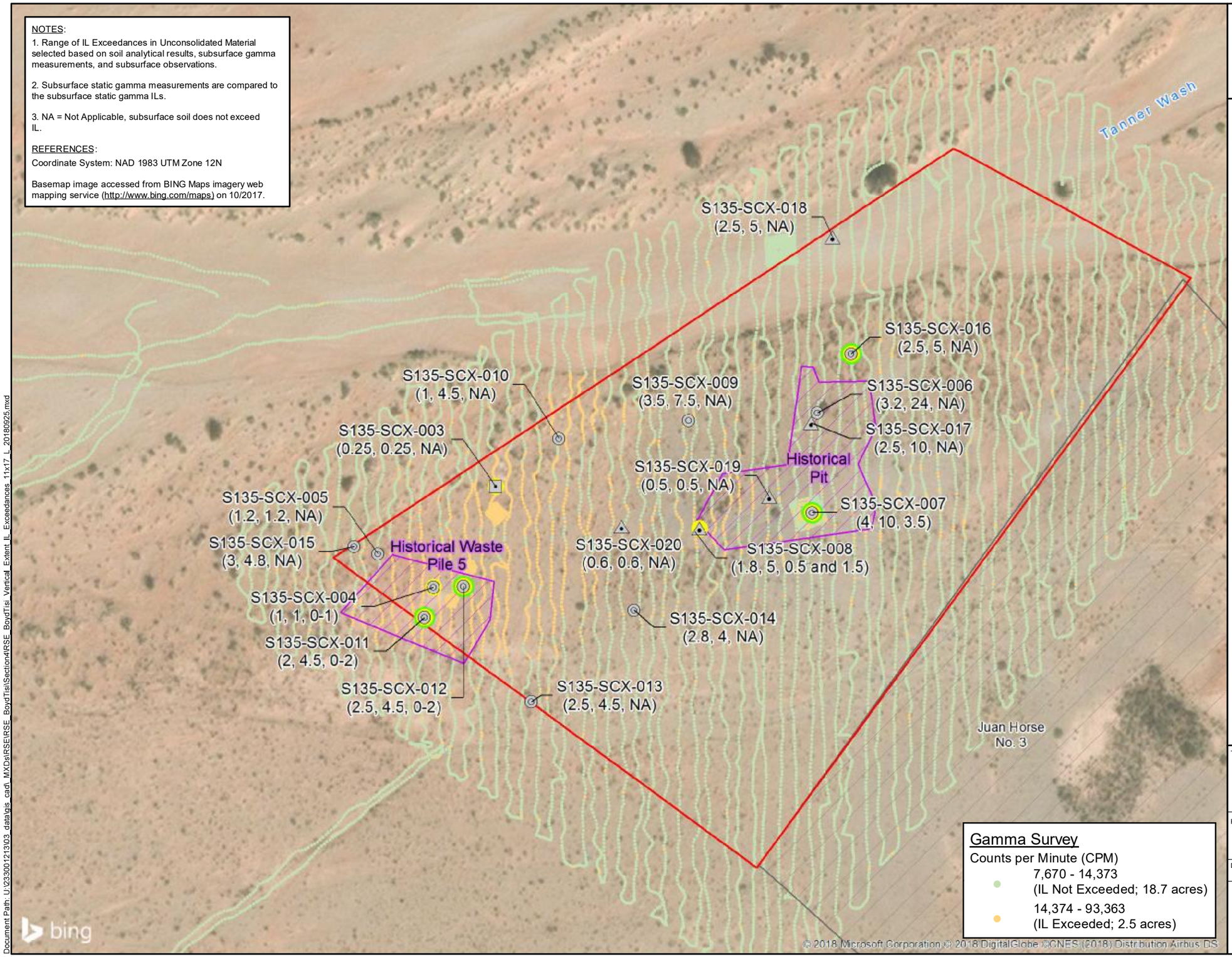

Gamma Survey

Counts per Minute (CPM)

7,670 - 14,373
(IL Not Exceeded; 18.7 acres)

14,374 - 93,363
(IL Exceeded; 2.5 acres)

NAVAJO NATION
AUM Environmental Response Trust-First Phase

LEGEND

- Borehole Location - Surface and Subsurface Samples (Depth of Bedrock, Borehole Depth, Depth Range of IL Exceedance in Unconsolidated Material)
- Borehole Location - Surface Samples Only (Depth of Bedrock, Borehole Depth, Depth Range of IL Exceedance in Unconsolidated Material)
- Borehole Location - Static Gamma Data Only (Depth of Bedrock, Borehole Depth, Depth Range of IL Exceedance in Unconsolidated Material)
- IL Exceedance in Unconsolidated Material in Borehole
- IL Exceedance in Bedrock in Borehole
- Historical Waste Pile and Pit
- Claim Boundary
- Other Claim Boundary

N
W E
S

0 100 200
Feet

TITLE:
Vertical Extent of IL Exceedances in Unconsolidated Material

PROJECT:
Removal Site Evaluation
Boyd Tisi No. 2 Mine Site

DATE: 9/25/2018

DOCUMENT NAME: Removal Site Evaluation Report

AUTHOR: CBB

REVIEWER: EDZ

FIGURE: 4-5

Stantec

Document Path: U:\233001213\03 data\gis_cad_MXDs\RSE\IRSE_BoydTisi\Section4\IRSE_BoydTisiSection4IRSE_BoydTisi_Vertical_Extent_IL_Exceedances_11x17_L_20180925.mxd

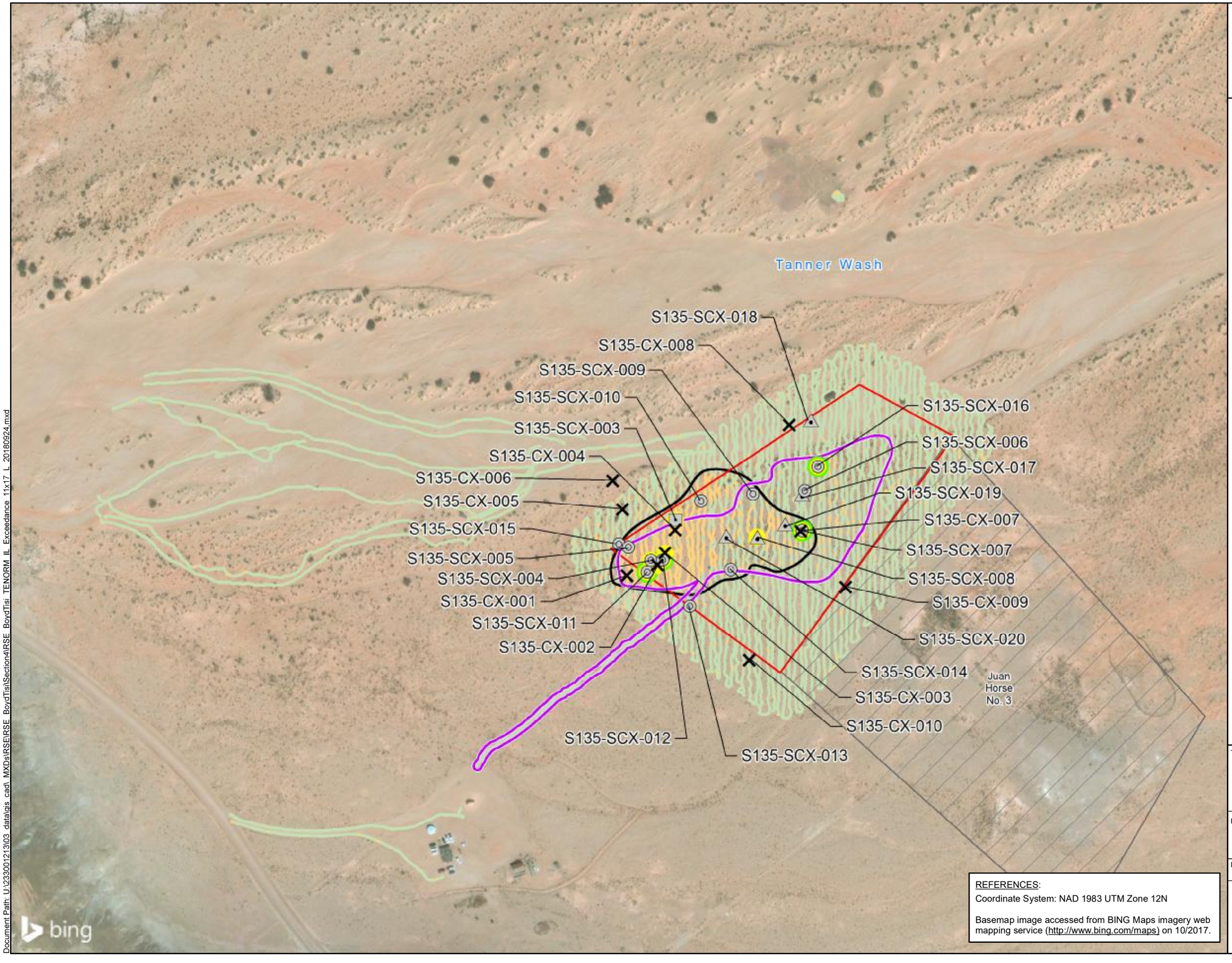

REFERENCES:
Coordinate System: NAD 1983 UTM Zone 12N

Basemap image accessed from BING Maps imagery web mapping service (http://www.bing.com/maps) on 10/2017.

NAVAJO NATION
AUM Environmental Response Trust-First Phase

LEGEND

- Surface Sample Location
- Borehole Location - Surface and Subsurface Samples
- Borehole Location - Surface Samples Only
- Borehole Location - Static Gamma Data Only
- IL Exceedance in Unconsolidated Material in Borehole
- IL Exceedance in Bedrock in Borehole
- TENORM (3.9 acres)
- Approximate Area where Surface Gamma IL is Exceeded (2.5 acres)
- Claim Boundary
- Other Claim Boundary

Gamma Survey

Counts per Minute (CPM)

- 7,670 - 14,373 (IL Not Exceeded; 18.7 acres)
- 14,374 - 93,363 (IL Exceeded; 2.5 acres)

N W E S

0 250 500
Feet

TITLE:
TENORM Compared to Lateral Extent of IL Exceedances

PROJECT:
Removal Site Evaluation
Boyd Tisi No. 2 Mine Site

DATE: 10/2/2018

DOCUMENT NAME: Removal Site Evaluation Report

AUTHOR: CBB

REVIEWER: EDZ

Stantec

FIGURE: 4-6

Document Path: U:\233001213\03_data\gis_cad_MXDs\RSE\RSE_BoydTisi\Section4\RSE_BoydTisi_TENORM_IL_Exceedance_11x17_L_20180924.mxd

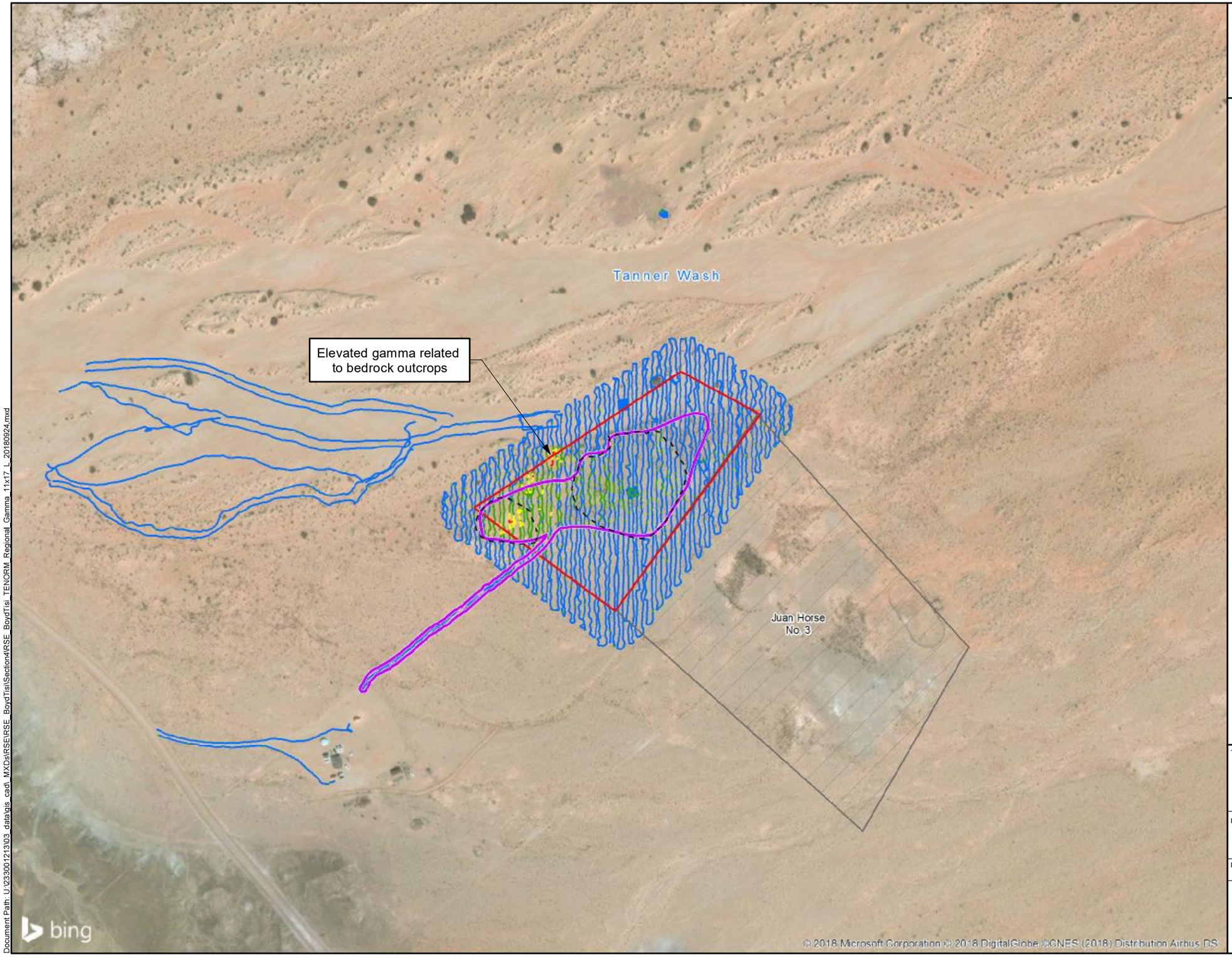

NAVAJO NATION
AUM Environmental Response Trust-First Phase

LEGEND

- TENORM
- Reclaimed Area
- Claim Boundary
- Other Claim Boundary

Gamma Survey

Counts per Minute (CPM)

- 7,670 - 14,373 (Minimum to BG-3 IL)
- 14,374 - 28,746 (BG-3 IL to 2x BG-3 IL)
- 28,747 - 71,865 (2x BG-3 IL to 5x BG-3 IL)
- 71,866 - 93,363 (5x BG-3 IL to Maximum)

REFERENCES:

Coordinate System: NAD 1983 UTM Zone 12N

Basemap image accessed from BING Maps imagery web mapping service (http://www.bing.com/maps) on 10/2017.

N W E S

0 300 600

Feet

TITLE:

TENORM Compared to Gamma Radiation Survey Results

PROJECT:

Removal Site Evaluation
Boyd Tisi No. 2 Mine Site

DATE: 9/25/2018

DOCUMENT NAME: Removal Site Evaluation Report

AUTHOR: CBB

REVIEWER: EDZ

FIGURE: 4-7

Stantec

Document Path: U:\233001213\03_data\gis_cad_MXDs\RSE\RSE_BoydTisi\Section4\RSE_BoydTisi_TENORM_Regional_Gamma_11x17_L_20180924.mxd

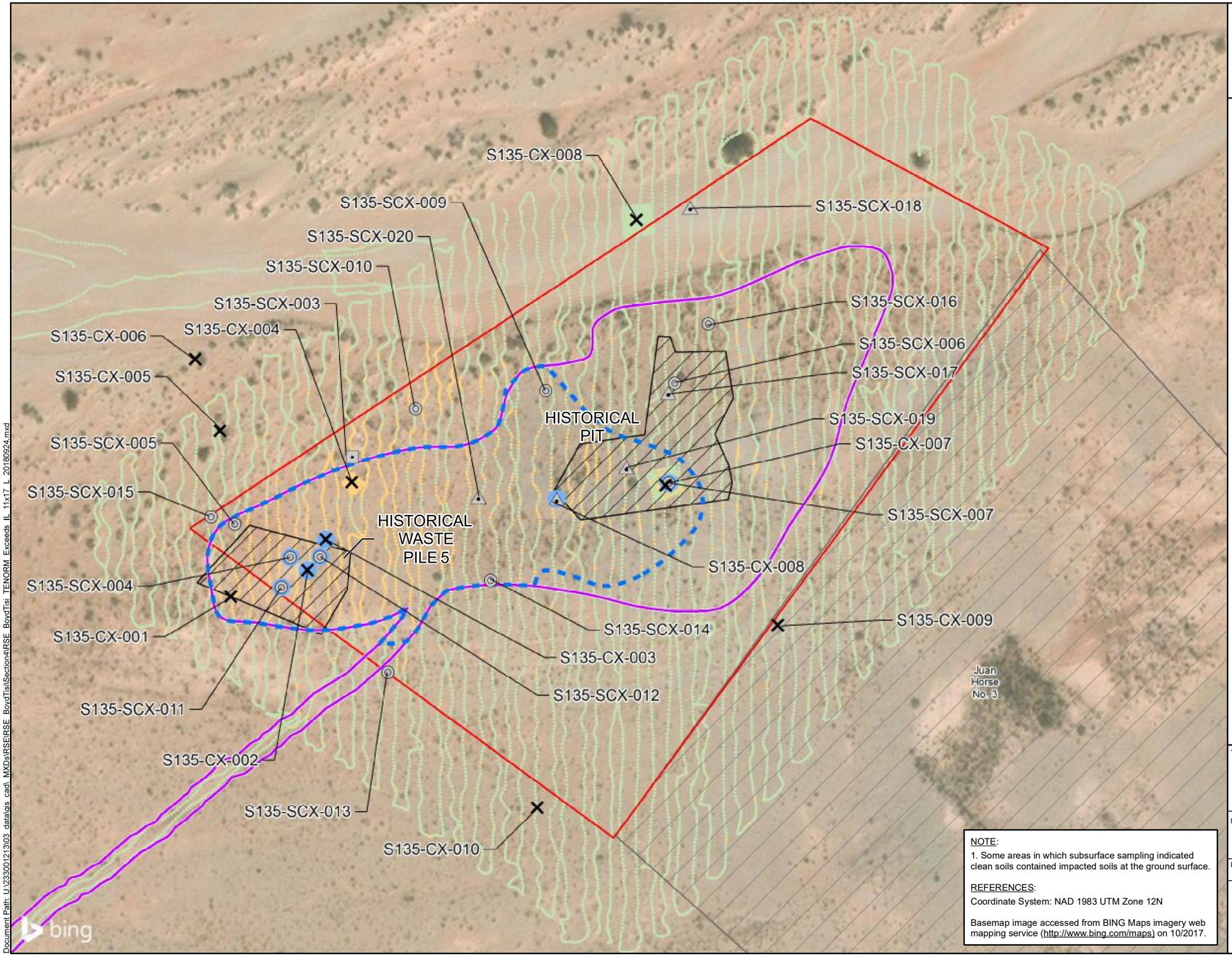

NAVAJO NATION
AUM Environmental Response Trust-First Phase

LEGEND

- Surface Sample Location
- Borehole Location - Surface and Subsurface Samples
- Borehole Location - Surface Samples Only
- Borehole Location - Static Gamma Data Only
- IL Exceedance in Unconsolidated Material in Borehole
- TENORM Exceeding Surface Gamma ILs (1.9 acres)
- TENORM (3.9 acres)
- Historical Waste Pile and Pit
- Claim Boundary
- Other Claim Boundary

Gamma Survey

Counts per Minute (CPM)

- 7,670 - 14,373 (IL Not Exceeded; 18.7 acres)
- 14,374 - 93,363 (IL Exceeded; 2.5 acres)

N W E S

0 100 200

Feet

NOTE:
1. Some areas in which subsurface sampling indicated clean soils contained impacted soils at the ground surface.

REFERENCES:
Coordinate System: NAD 1983 UTM Zone 12N

Basemap image accessed from BING Maps imagery web mapping service (http://www.bing.com/maps) on 10/2017.

TITLE:
TENORM that Exceeds ILs

PROJECT:
Removal Site Evaluation
Boyd Tisi No. 2 Mine Site

DATE: 9/29/2018

DOCUMENT NAME: Removal Site Evaluation Report

AUTHOR: CBB

REVIEWER: EDZ

Stantec

FIGURE: 4-8a

Document Path: U:\233001213\03 data\gis cad\ MXDs\RSE\RSE BoydTisiSection4\RSE BoydTisi TENORM Exceeds IL 11x17 L 20180924.mxd

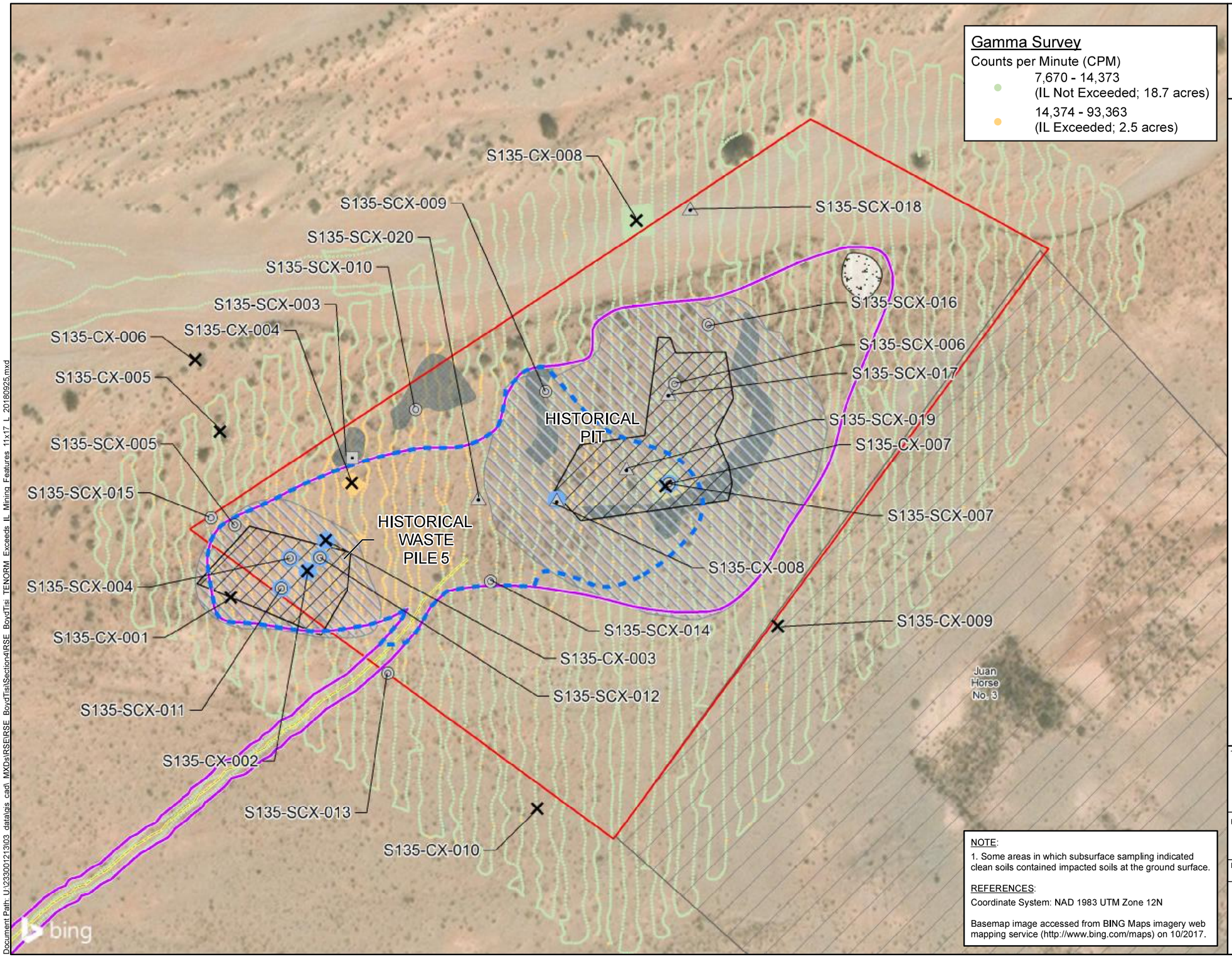

NAVAJO NATION
AUM Environmental Response Trust-First Phase

LEGEND

- Surface Sample Location
- Borehole Location - Surface and Subsurface Samples
- Borehole Location - Surface Samples Only
- Borehole Location - Static Gamma Data Only
- IL Exceedance in Unconsolidated Material in Borehole
- TENORM Exceeding Surface Gamma ILs (1.9 acres)
- TENORM (3.9 acres)
- Potential Haul Road
- Historical Waste Pile and Pit
- Debris
- Reclaimed Area
- TRcp: Petrified Forest Member – CHINLE FORMATION (UPPER TRIASSIC) – Claystone, siltstone, and minor sandstone, variegated.
- Claim Boundary
- Other Claim Boundary

N
W E
S

0 100 200
Feet

NOTE:
1. Some areas in which subsurface sampling indicated clean soils contained impacted soils at the ground surface.

REFERENCES:
Coordinate System: NAD 1983 UTM Zone 12N

Basemap image accessed from BING Maps imagery web mapping service (http://www.bing.com/maps) on 10/2017.

TITLE:
TENORM that Exceeds ILs Compared to Mining Related Features

PROJECT:
Removal Site Evaluation
Boyd Tisi No. 2 Mine Site

DATE: 9/29/2018

DOCUMENT NAME: Removal Site Evaluation Report

Stantec

AUTHOR: CBB | REVIEWER: EDZ

FIGURE: 4-8b

Document Path: U:\233001213\03_data\gis_cad_MXDs\RSE\RSE_BoydTisi\Section4\RSE_BoydTisi_TENORM_Exceeds_IL_Mining_Features_11x17_L_20180925.mxd

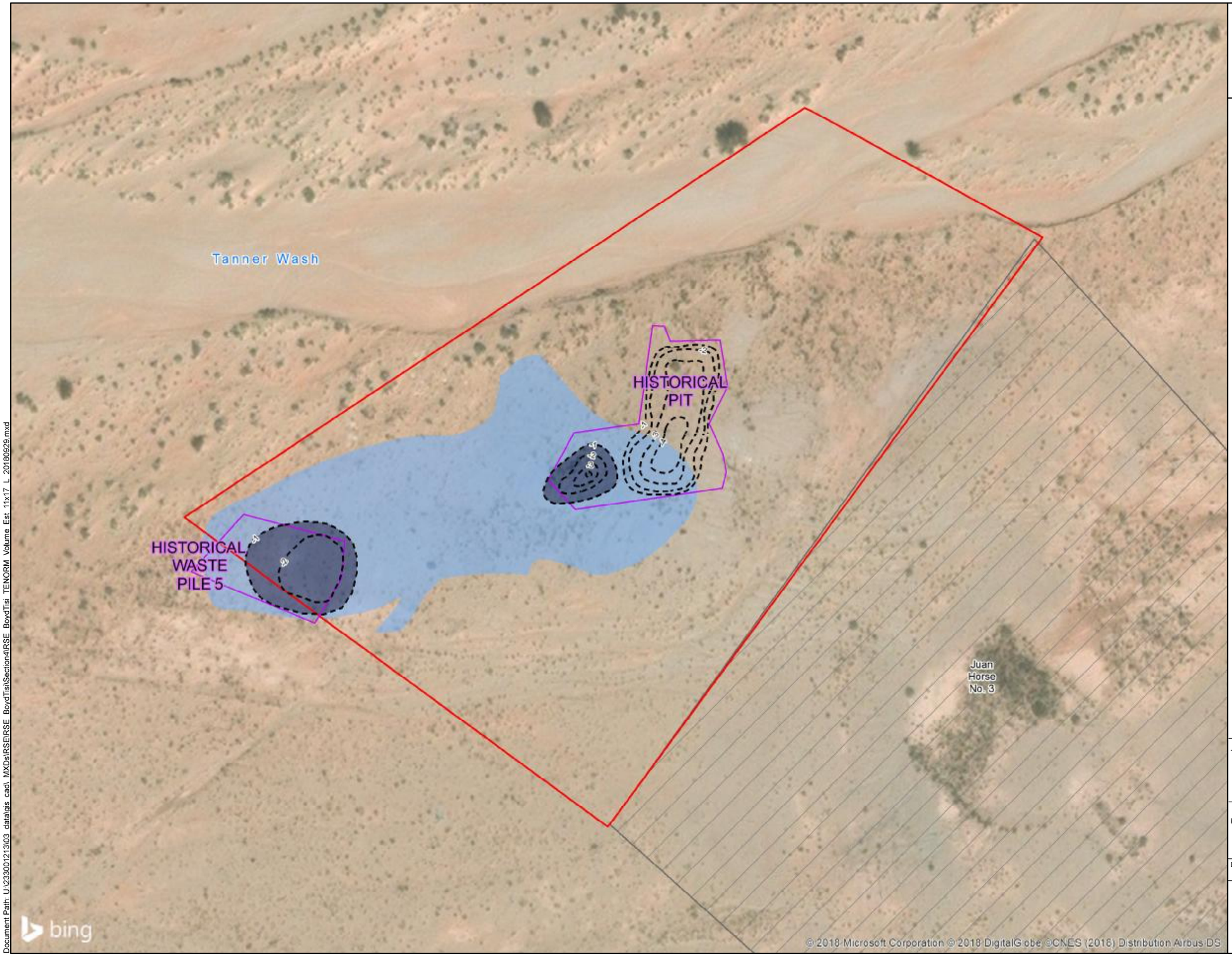

NAVAJO NATION
AUM Environmental Response Trust-First Phase

LEGEND

- Estimated Contour for Subsurface Extent of Earthworks
- Historical Waste Pile and Pit
- Claim Boundary
- Other Claim Boundary

Average Depth by Group (feet below ground surface)

- Group 1 - > 1. 0 ft
- Group 2 - 0 to 1.0 ft

Group	Area (square feet)	Volume (cubic yards)
1	12,627	840
2	68,343	2,531

NOTE:

1. Depths shown here are based on the ranges and depths shown in Figures 2-3 and 4-4b.

REFERENCES:

Coordinate System: NAD 1983 UTM Zone 12N

Basemap image accessed from BING Maps imagery web mapping service (http://www.bing.com/maps) on 9/2018.

N W E S

0 100 200

Feet

TITLE:

Volume Estimate of TENORM that Exceeds ILs

PROJECT:

Removal Site Evaluation
Boyd Tisi No. 2 Mine Site

DATE: 9/29/2018

DOCUMENT NAME: Removal Site Evaluation Report

AUTHOR: CBB

REVIEWER: EDZ

FIGURE: 4-9

Stantec

Document Path: U:\233001213\03 data\gis_cad\ MXDs\RSE\RSE BoydTisiSection4\RSE BoydTisi TENORM Volume Est 11x17 L 20180929.mxd

APPENDICES

Appendix A Radiological Characterization of the Boyd Tisi No. 2 Abandoned Uranium Mine

Radiological Characterization of the Boyd Tisi No.2 Abandoned Uranium Mine

September 19, 2018

prepared for:

Stantec Consulting Services Inc.

2130 Resort Drive, Suite 350
Steamboat Springs, CO 80487

prepared by:



Environmental Restoration Group, Inc.

8809 Washington St. NE
Suite 150
Albuquerque, NM 87113

Contents

Executive Summary iv
1.0 Introduction 1
2.0 GPS-Based Gamma Surveys 3
2.1 Potential Background Reference Area 4
2.2 Survey Area 6
3.0 Correlation Studies 9
3.1 Radium-226 and thorium concentrations in surface soils and gamma count rates 9
3.2 Equilibrium in the uranium series 15
3.3 Exposure rates and gamma count rates 17
4.0 Deviations to RSE Workplan 21
5.0 Conclusions 21
6.0 References 22

Tables

Table 1 Detection systems used in the GPS-Based gamma surveys

Table 2 Summary statistics for gamma count rates in the potential Background Reference Area

Table 3 Summary statistics for gamma count rates in the Survey Area

Table 4 Gamma count rates and associated concentrations of radium-226 in samples of surface soils obtained in the correlation study

Table 5 Concentrations of isotopes of thorium in samples of surface soils obtained in the correlation study

Table 6 Predicted concentrations of radium-226 in the Survey Area

Table 7 Co-located gamma count rate and exposure rate measurements

Table 8 Predicted exposure rates in the potential Background Reference Area

Table 9 Predicted exposure rates in the Survey Area

Figures

Figure 1	Location of the Boyd Tisi No.2 Abandoned Uranium Mine
Figure 2	Gamma count rates in the potential Background Reference Area
Figure 3	Histogram of gamma count rates in the potential Background Reference Area
Figure 4	Gamma count rates in the Survey Area
Figure 5	Histogram of gamma count rates in the Survey Area
Figure 6	Box plot of gamma count rates in the Survey Area
Figure 7	GPS-based gamma count rate measurements made for the correlation study
Figure 8	Correlation of gamma count rates and concentrations of radium-226 in surface soils
Figure 9	Predicted concentrations of radium-226 in the Survey Area
Figure 10	Evaluation of secular equilibrium in the uranium decay series.
Figure 11	Correlation of gamma count rates and exposure rates
Figure 12	Predicted exposure rates in the Survey Area

Appendices

Appendix A	Instrument calibration and completed function check forms
Appendix B	Exposure Rate Measurements
Appendix C	Technical Memo from ERG to Stantec. "Statistical Analysis of the Navajo Trustee Mines Dataset: Multivariate Linear Regression for Evaluation of Gamma Correlation with Ra-226 and Evaluation of Secular Equilibrium Between Ra-226 and Th-230".
Appendix D	Preliminary Report "Radiological Characterization of the Boyd Tisi No.2 Western Abandoned Uranium Mine"

Acronyms

AUM	abandoned uranium mine
BG3	Background Reference Area 3
bgs	below ground surface
cpm	counts per minute
EPA	U.S. Environmental Protection Agency
ERG	Environmental Restoration Group, Inc.
ft	foot
GPS	global positioning system
MDC	minimum detectable concentration
µg/kg	micrograms per kilogram
µR/h	microRoentgens per hour
pCi/g	picocuries per gram
R^2	Pearson's Correlation Coefficient
RSE	removal site evaluation
σ	standard deviation
Stantec	Stantec Consulting Services Inc.

Executive Summary

This report addresses the radiological characterization of the Boyd Tisi No.2 abandoned uranium mine (AUM) located in the Cameron Chapter of the Navajo Nation near Cameron, Arizona. It documents part of the implementation of the Navajo Nation AUM Environmental Response Trust, First Phase, Removal Site Evaluation Work Plan (RSE Work Plan: MWH, 2016). The work was performed by Environmental Restoration Group, Inc. (ERG) of Albuquerque, New Mexico and Stantec Consulting Services Inc. (Stantec) in accordance with the Navajo Nation AUM Environmental Response Trust – First Phase.

This report provides 1) the results of a Global Positioning System (GPS)-based gamma radiation (gamma) survey, 2) comparisons of the gamma count rates at this AUM to exposure rates and concentrations of radium-226 in surface soils, and 3) an assessment of equilibrium in the uranium series. The field activities addressed in this report were conducted on October 24 and 26, 2016; and March 16, 2017. They included a GPS-based radiological survey of land surfaces over a Survey Area consisting of the mine claim area out to a 100-foot (ft) buffer; and roads and drainages within a 0.25-mile radius of the 100-ft buffer; and correlation studies.

The discussion of the results of soil sampling in this report is limited to concentrations of radium-226 and isotopes of thorium in samples taken from surface soils, as part of correlation studies. The objective of the analysis of thorium isotopes was to 1) assess the potential effects of thorium-232 and thorium-228 on the correlation of gamma count rates to concentrations of radium-226 in surface soils; and 2) evaluate thorium-230 and radium-226 activities to indicate the status of equilibrium in the uranium decay series. These and additional results for the RSE are addressed in the "Boyd Tisi No. 2 Removal Site Evaluation Report" (Stantec, 2018).

The findings of the RSE pertaining to these activities are:

- The horizontal extent and magnitude of mining-related materials were delineated sufficiently to support additional characterization of the subsurface.

- Elevated count rates were observed in the southwest corner of the mine claim at outcrops of bedrock and soils in an area that appeared to be a former waste pile.

- A potential Background Reference Area was established.

- The relationship between gamma count rates and concentrations of radium-226 in surface soils (0 to 0.5 ft below ground surface) is described by a linear regression model:

  Gamma Count Rate (cpm) = 3635 x [radium-226 (pCi/g)] + 14212

- The distribution of concentrations of radium-226 in surface soils predicted using this model is rightward tailed. The values in the Survey Area range from -1.6 to 21.8 pCi/g, with a central tendency (median) of -0.7 pCi/g.

- The thorium series radionuclides do not appear to affect the prediction of concentrations of radium-226 from gamma count rates.

- There is evidence that thorium-230 and radium-226 are in equilibrium, but not secular equilibrium.

- The relationship between gamma count rates and exposure rates is described by a linear regression model:

  Exposure Rate (microRoentgens per hour [µR/h]) = Gamma Count Rate (cpm) x $5x10^{-4}$ + 7.0

- The distribution of exposure rates predicted using this model is rightward tailed. The values in the Survey Area range from 11.2 to 53.7, with a central tendency (median) of 12.9 µR/h.

1.0 Introduction

This report addresses the radiological characterization of the Boyd Tisi No.2 abandoned uranium mine (AUM) located in the Cameron Chapter of the Navajo Nation near Cameron, Arizona. It documents part of the implementation of the Navajo Nation AUM Environmental Response Trust, First Phase, Removal Site Evaluation Work Plan (RSE Work Plan: MWH, 2016). The work was performed by Environmental Restoration Group, Inc. (ERG) of Albuquerque, New Mexico and MWH, now part of Stantec Consulting Services Inc. (Stantec) in accordance with the Navajo Nation AUM Environmental Response Trust – First Phase.

The activities described here focus on the characterization of uranium series radionuclides in surface soils at the AUM. This report provides 1) the results of a Global Positioning System (GPS)-based gamma radiation (gamma) survey, 2) comparisons of gamma count rates to exposure rates and concentrations of radium-226 in surface soils, and 3) an assessment of equilibrium in the uranium decay series.

The objective of the correlation between field gamma count rate and surface soil concentrations of radium-226 was to use field instrumentation to predict surface soil concentrations of radium-226. The objective of the correlation between field gamma count rate and exposure rate was to use field instrumentation to predict exposure rates.

The field activities addressed in this report were conducted on October 24 and 26, 2016; and March 16, 2017 in accordance with the methods described in the RSE Work Plan. The GPS-based radiological survey of land surfaces covered an approximately 21-acre Survey Area that included the mine claim area out to a 100-foot buffer; and roads and drainages within a 0.25-mile radius of the buffer; gamma count rate and exposure rate measurements at fixed points; and gamma count rate measurements and soil sampling for radionuclides and metals in areas centered on these fixed points. Section 3.0 of the RSE Work Plan provides the data quality objectives (DQOs) for the project.

The discussion of the results of soil sampling in this report is limited to concentrations of radium-226 and isotopes of thorium in samples taken from surface soils, as part of correlation studies. The objective of the analysis of thorium isotopes was to 1) assess the potential effects of thorium-232 and thorium-228 on the correlation of gamma count rates to concentrations of radium-226 in surface soils; and 2) evaluate thorium-230 and radium-226 activities to indicate the status of equilibrium in the uranium decay series. These and additional results for the RSE are addressed in the "Boyd Tisi No. 2 Removal Site Evaluation Report" (Stantec, 2018).

Figure 1 shows the location of the AUM. Background information that is pertinent to the characterization of this AUM is presented in the "Boyd Tisi No. 2 Removal Site Evaluation Report" (Stantec, 2018).



Figure 1. Location of the Boyd Tisi No.2 Abandoned Uranium Mine

2.0 GPS-Based Gamma Surveys

This section addresses the GPS-based surveys conducted in a potential Background Reference Area and the Survey Area. The survey was extended to bound areas in which elevated count rates were observed. Table 1 lists the detection systems used in the survey. Pursuant to the approved RSE Work Plan, detectors were function checked each day to ensure the instruments were stable to the limits prescribed by the Work Plan. Detector normalization was not performed as it was not addressed by the RSE Work Plan. Appendix A presents the completed function check forms and calibration certificates for the instruments. Standard operating procedures (SOPs) are discussed in Section 4.2 of the RSE Work Plan and are provided in Appendix E therein. ERG followed the quality assurance and control requirements stipulated in the approved Work Plan.

The 2x2 sodium iodide (NaI) detectors used in this investigation are sensitive to sub-surface radium-226 decay products and other gamma emitting radionuclides. The purpose of the gamma correlation was to estimate radium-226 concentrations in the upper 15 cm of soil. ERG selected correlation plots based on the range of gamma radiation levels observed. If subsurface soil concentrations of gamma emitting radionuclides were variable between correlation locations, this variability would be included in the regression model, and if the magnitude of the effect were sufficiently large, it would result in failure of the DQOs related to the regression analysis.

Table 1. Detection systems used in the GPS-Based gamma surveys.

Survey Area	Ludlum Model 44-10	Ludlum Model 2221 Ratemeter/Scaler
Potential Background Reference Area	PR303727[a]	254772[a]
Survey Area	PR303727[a]	254772[a]
	PR295014	196086

Notes:
[a] Detection system used in the correlation studies described in Section 3.0.

2.1 Potential Background Reference Area

A potential Background Reference Area was surveyed, the location and results of which are depicted on Figure 2. BG3 in Figure 2 is Background Reference Area 3.

Table 2 lists a summary of the gamma count rates, which in BG3 ranged from 10,829 to 15,070 counts per minute (cpm), with a mean and median of 12,727 and 12,758 cpm, respectively.

Figure 3 depicts a histogram of the gamma count rates. The red and green lines on the figure are theoretical normal and lognormal distributions, respectively. They are presented to show what could be expected if the distributions were normal or lognormal.

Table 2. Summary statistics for gamma count rates in the potential Background Reference Area.

	Gamma Count Rate (cpm)				
n	**Min**	**Max**	**Mean**	**Median**	**Standard Deviation**
116	10,829	15,070	12,727	12,758	865

Notes:
cpm = counts per minute

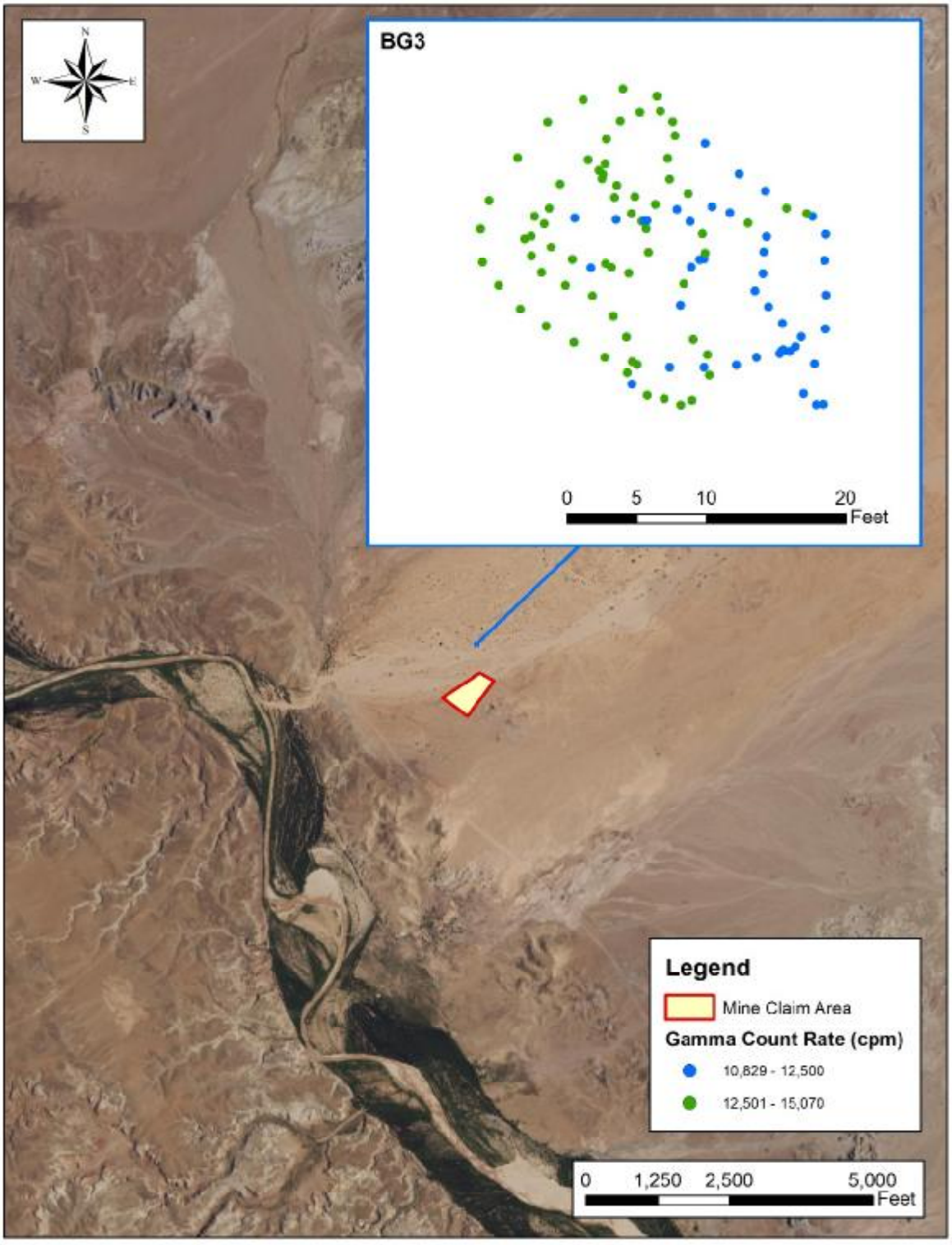

Figure 2. Gamma count rates in the potential Background Reference Area.

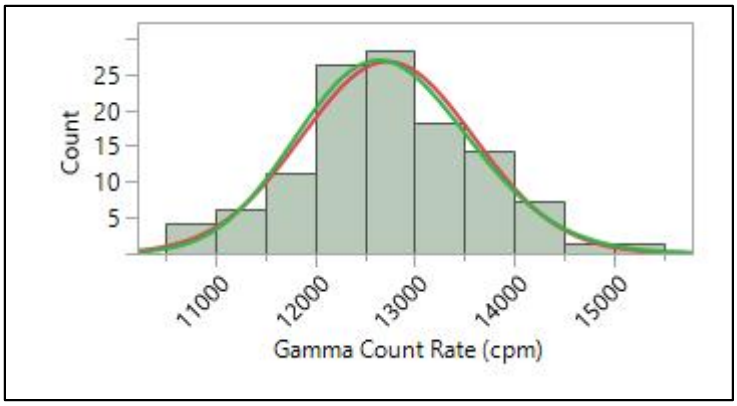

Figure 3. Histogram of gamma count rates in the potential Background Reference Area.

2.2 Survey Area

The gamma count rates observed in the Survey Area are depicted in Figure 4. The highest count rates were observed in the southwest corner of the mine claim at outcrops of bedrock and soils in an area that appeared to be a former waste pile.

Figure 5 is a histogram of the gamma count rate measurements made in the Survey Area, including the area surveyed outside the 100-ft buffer. As stated in Section 2.1, the red and green lines on the figure are theoretical normal and lognormal distributions, respectively. They are presented to show what could be expected if the distributions were normal or lognormal. The distribution of the right-tailed set of measurements, evaluated using U.S. Environmental Protection Agency software ProUCL, is not defined. The box plot in Figure 6 depicts cutoffs as horizontal bars, from bottom to top, for the following values or percentiles: minimum, 0.5, 2.5, 10, 25, 50, 75, 90, 97.5, 99.5, and maximum. The 25th, 50th, and 75th percentiles - the three horizontal lines of the box inside the box plot—are 10,953, 11,717, and 12,712 cpm, respectively.

Table 3 is a statistical summary of the measurements, which range from 8,366 to 93,363 cpm and have a central tendency (median) of 11,717 cpm.

Table 3. Summary statistics for gamma count rates in the Survey Area.

Parameter	Gamma Count Rate (cpm)
n	17,504
Minimum	8,366
Maximum	93,363
Mean	12,250
Median	11,717
Standard Deviation	3,361

Notes:
cpm = counts per minute

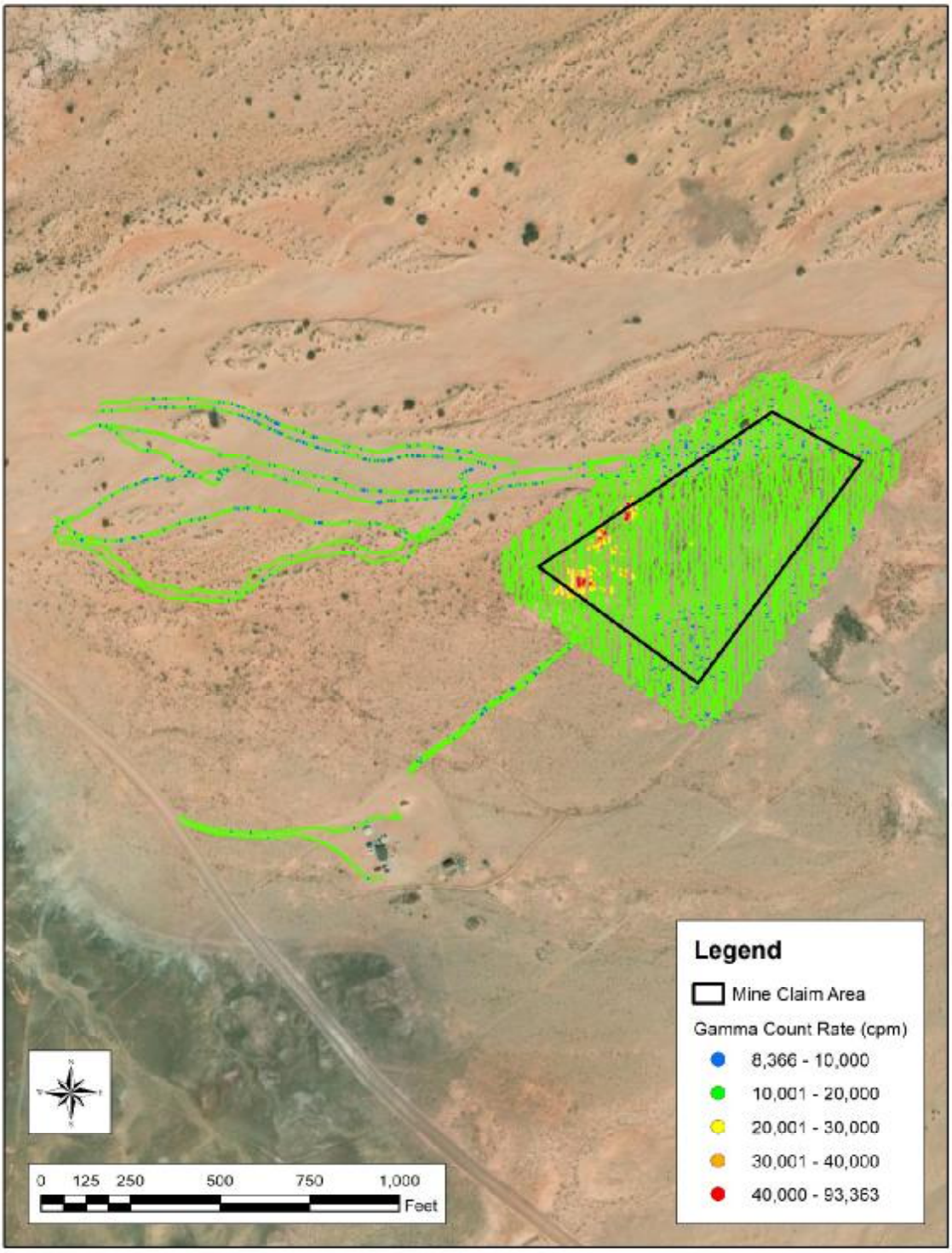

Figure 4. Gamma count rates in the Survey Area.

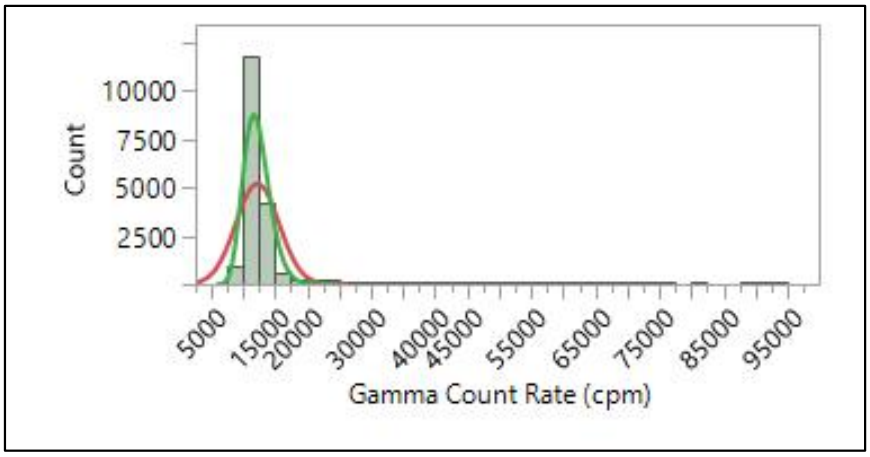

Figure 5. Histogram of gamma count rates in the Survey Area.

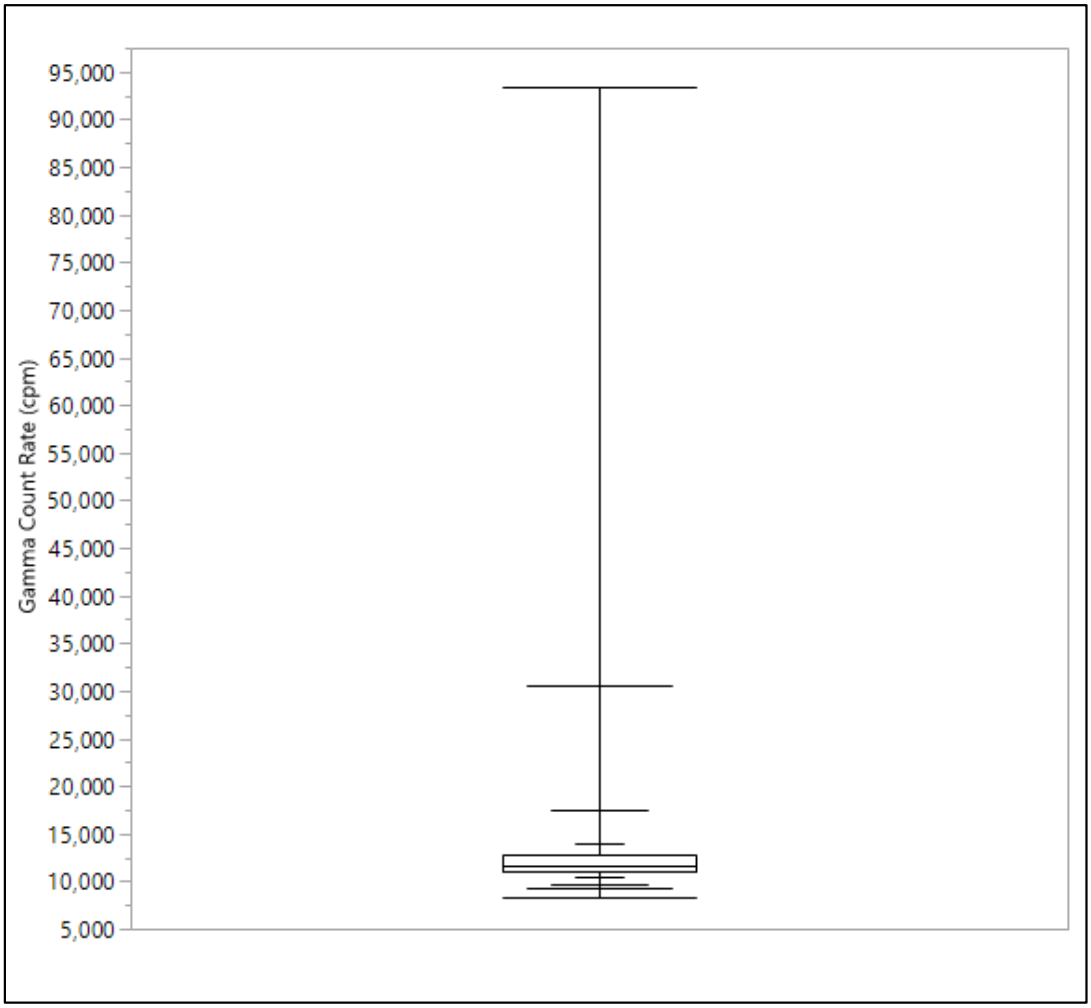

Figure 6. Box plot of gamma count rates in the Survey Area.

3.0 Correlation Studies

The following sections address the activities under two types of correlation studies outlined in the RSE Work Plan: comparisons of 1) radium-226 concentrations in surface soils and gamma count rates and 2) exposure rates and gamma count rates. GPS-based gamma count rate measurements were made over small areas for the former study. The means of the measurements were used in this case. Static gamma count rate measurements, co-located with exposure rate measurements, were used in the latter study.

3.1 Radium-226 and thorium concentrations in surface soils and gamma count rates

On October 26, 2016 field personnel made GPS-based gamma count rate measurements and collected five-point composite samples of surface soils in each of five areas at the AUM. These areas were selected using criteria established in the RSE Work Plan. No DQO was established for homogeneity of the correlation plots and as described in Section 4.3 and Appendix E of the RSE Work Plan, homogeneity of the correlation plots was evaluated qualitatively. Sub-samples were collected from the correlation plot centroid and at each corner of the plot. The activities were performed contemporaneously, by area and all on the same day, such that the two could be compared. Figure 7 shows the GPS-based gamma count rate measurements in the five areas (labeled with location identifiers).

The soil samples were analyzed by ALS Laboratories in Ft Collins, CO for radium-226 and isotopic thorium. The latter analysis was included to assess the potential effects of thorium series isotopes on the correlation. Table 4 lists the results of the measurements and radium-226 concentrations in the soil samples. The means of the gamma count rate measurements range from 10,241 to 57,665 cpm. The concentrations of radium-226 range from 0.64 to 12.2 picocuries per gram (pCi/g).

Table 5 lists the concentrations of isotopes of thorium (thorium-228, -230, and -232) in the same soil samples.

Laboratory analyses are presented in Appendix F.2, Laboratory Analytical Data and Data Validation Report, in the “Boyd Tisi No.2 Removal Site Evaluation Report” (Stantec, 2018).

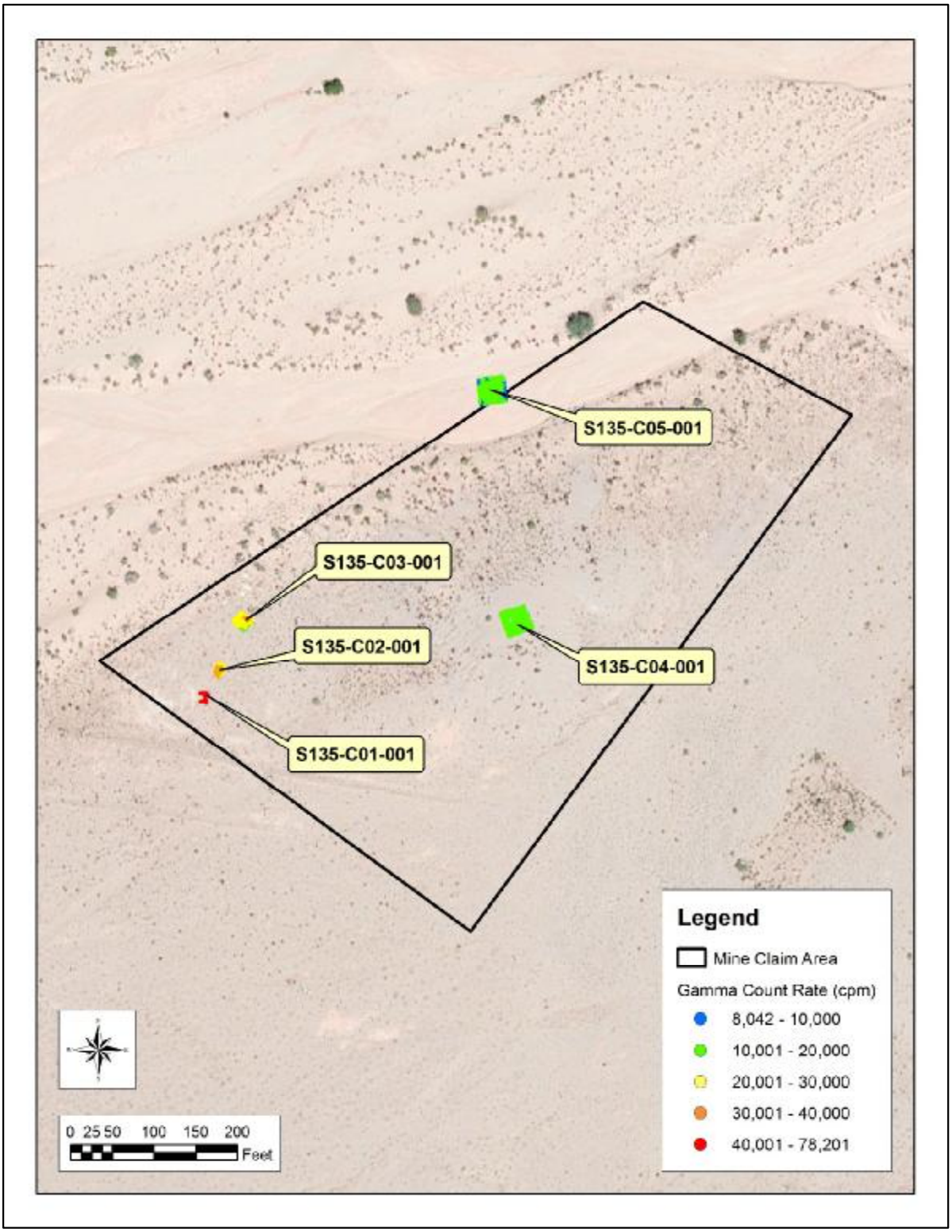

Figure 7. GPS-based gamma count rate measurements made for the correlation study.

Table 4. Gamma count rates and associated concentrations of radium-226 in samples of surface soils obtained in the correlation study.

		Gamma Count Rate (cpm)				Ra-226 (pCi/g)		
Location	Area (m^2)	Mean	Minimum	Maximum	σ	Result	Error ±2σ	MDC
S135-C01-001	12.8	57,665	39,959	78,201	10,475	12.2	1.6	0.7
S135-C02-001	17.6	28,943	21,520	36,261	2881	2.02	0.38	0.48
S135-C03-001	31.0	22,364	15,622	40,046	4937	1.04	0.24	0.3
S135-C04-001	109.6	13,211	10,891	16,588	962	0.98	0.25	0.43
S135-C05-001	102.5	10,241	8,042	13,448	905	0.64	0.2	0.32

Notes:
cpm = counts per minute
MDC = minimum detectable concentration
m^2 =square meters
pCi/g = picocuries per gram
σ = standard deviation

Table 5. Concentrations of isotopes of thorium in samples of surface soils obtained in the correlation study.

	Thorium-228 (pCi/g)			Thorium-230 (pCi/g)			Thorium-232 (pCi/g)		
Sample ID	Result	Error ± 2 σ	MDC	Result	Error ± 2 σ	MDC	Result	Error ± 2 σ	MDC
S135-C01-001	0.68	0.13	0.04	5.7	0.9	0.07	0.72	0.13	0.01
S135-C02-001	0.71	0.13	0.04	1.35	0.23	0.07	0.71	0.13	0.02
S135-C03-001	0.61	0.12	0.03	0.85	0.16	0.07	0.59	0.11	0.01
S135-C04-001	0.94	0.16	0.03	0.7	0.13	0.07	0.83	0.15	0.0
S135-C05-001	0.48	0.1	0.06	0.1	0.14	0.07	0.477	0.095	0.005

Notes:
MDC = minimum detectable concentration
pCi/g = picocuries per gram
σ = standard deviation

A model was made of the results in Table 4, predicting the concentrations of radium-226 in surface soils from the mean gamma count rate in each area. The mean relationship between the measurements, shown in Figure 8, is a linear function with an adjusted Pearson's Correlation Coefficient (adjusted R^2) of 0.87, as expressed in the equation:

$$\text{Gamma Count Rate (cpm)} = 3635 \times [\text{radium-226 (pCi/g)}] + 14212$$

The root mean square error and p-value for the model are 5.2×10^3 and 0.012, respectively; these parameters are not data quality objectives (DQOs) and are included only as information. The R^2 value for this model exceeds the project DQO of 0.8.

This equation was used to convert the gamma count rate measurements observed in the gamma surveys to predicted concentrations of radium-226. Table 6 presents summary statistics for the predicted concentrations of radium-226 in the Survey Area. The range of the predicted concentrations of radium-226 in the Survey Area is -1.6 to 21.8 pCi/g, with a mean and median of -0.5 and -0.7 pCi/g,

respectively. While the gamma correlation equation can be used to convert gamma count rates to concentrations of Ra-226 in soil, the resulting radium concentrations are highly uncertain estimates, as the wide prediction interval bands illustrated in Figure 8 demonstrate. Users of the regression equation should be aware of the limitations of the dataset and be cautious when estimating radium-226 concentrations.

Figure 9 shows the predicted concentrations of radium-226, the spatial and numerical distribution of which mirror those depicted in Figure 4.

Table 6. Predicted concentrations of radium-226 in the Survey Area.

Parameter	Radium-226 (pCi/g)
n	17,504
Minimum	-1.6
Maximum	21.8
Mean	-0.5
Median	-0.7
Standard Deviation	0.9

Notes:
pCi/g = picocuries per gram

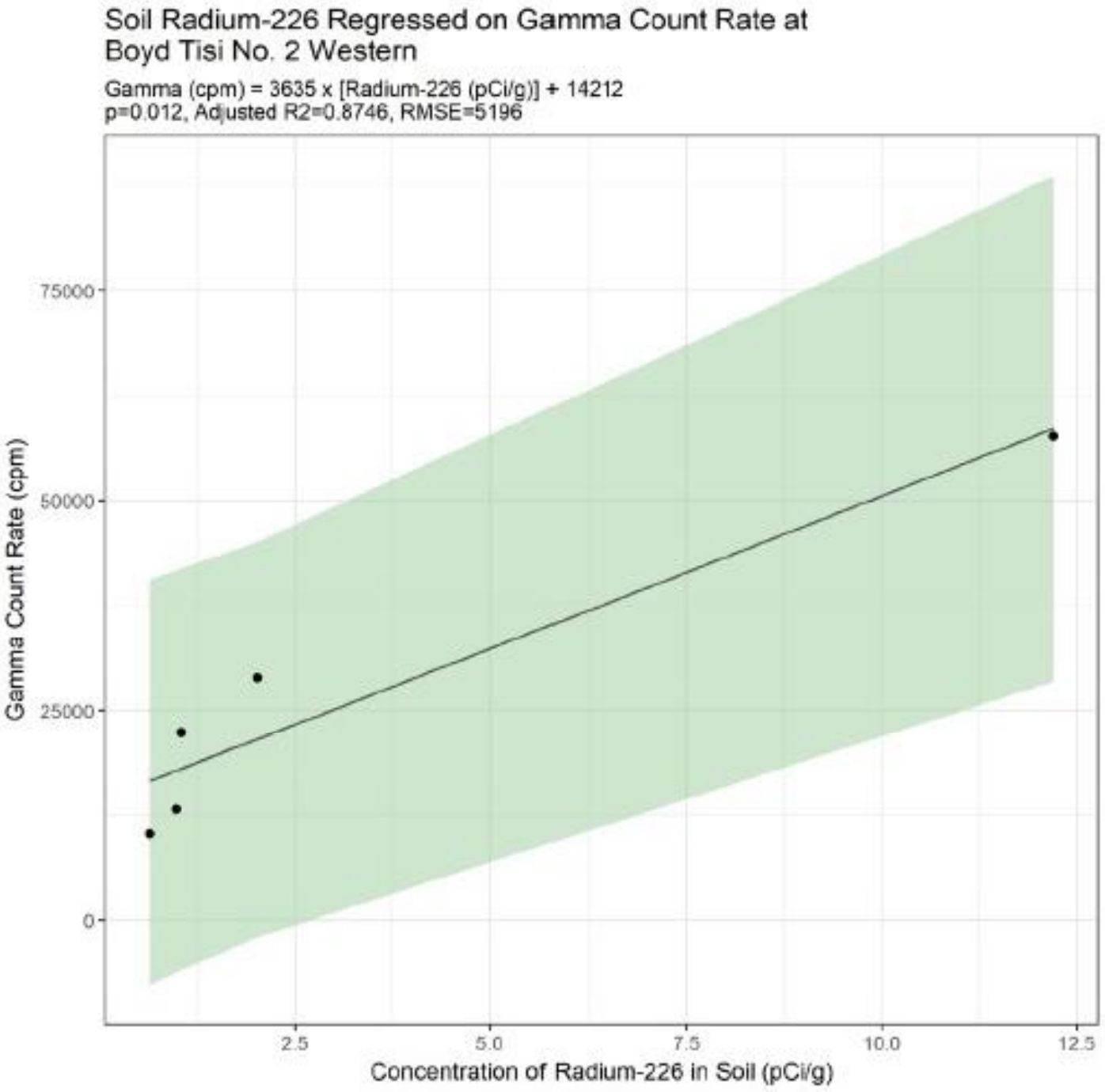

Figure 8. Correlation of gamma count rates and concentrations of radium-226 in surface soils (black line) with 95% upper prediction level bands plotted (shaded area).

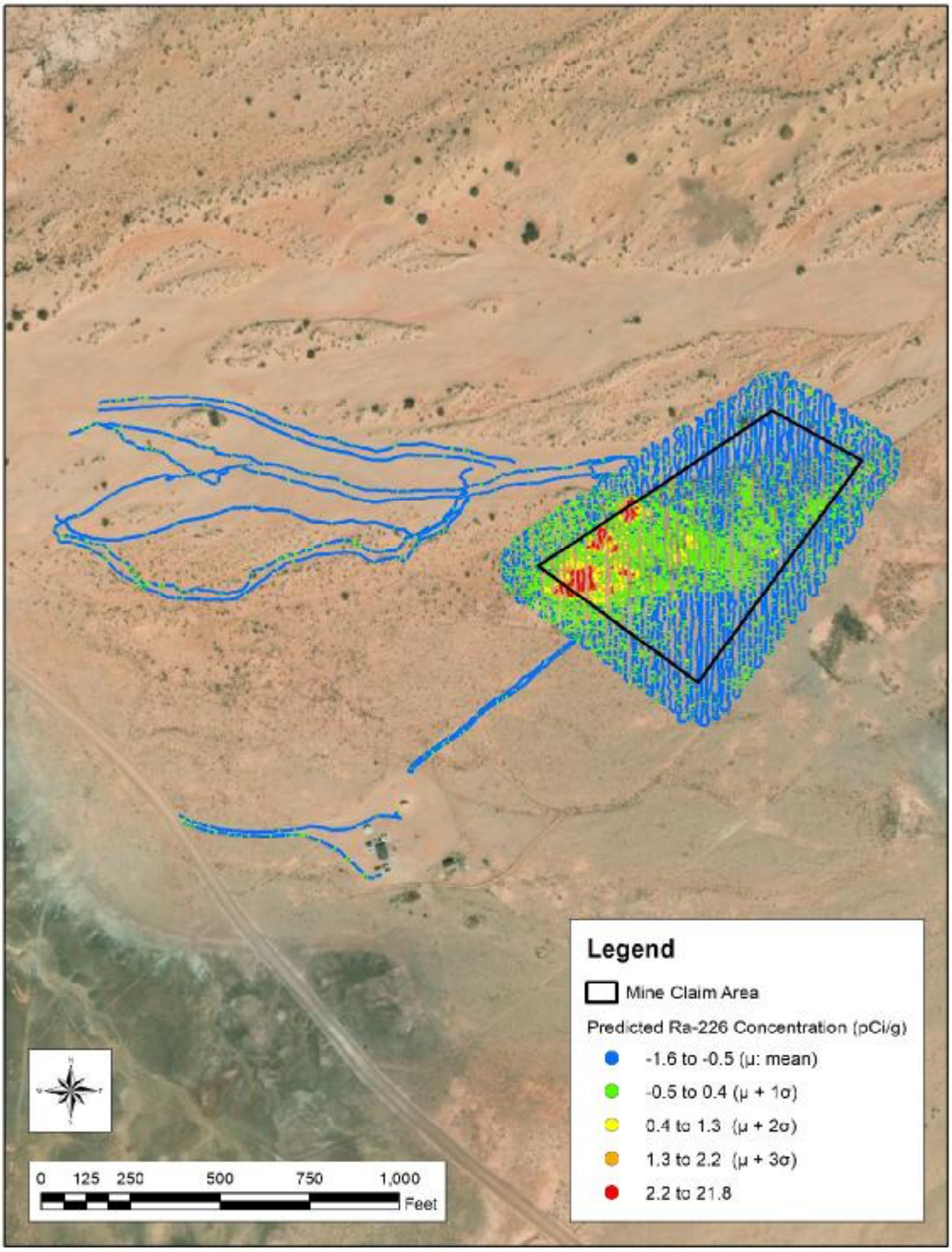

Figure 9. Predicted concentrations of radium-226 in the Survey Area.

Soil concentrations of potassium-40 (K-40) were not expected to be spatially variable within the site, and therefore this radionuclide was not separately accounted for in the RSE Work Plan. If K-40 concentrations did vary, this variability would be included in the regression model and, if the magnitude of the effect were sufficiently large, would result in failure of DQOs related to the regression analysis.

A multivariate linear regression (MLR) was used to evaluate the influence of thorium-232 and thorium-228, isotopes in the thorium series, on the average gamma count rate in the correlation locations. The MLR model was first run using radium-226, thorium-232, and thorium-228 as predictors of gamma count rate. The model failed to produce results because thorium-232 and thorium-228 are colinear. The MLR model was subsequently run without thorium-228. For the second model, thorium-232 ($p = 0.9$) and radium-226 ($p = 0.06$) were not significant (i.e., $p < 0.05$) predictors of gamma count rate collectively. Thorium-232 and radium-226 were then each modelled individually as a predictor of gamma count rate. The p-value for thorium-232 coefficient was 0.63 with an adjusted R^2 of -0.22. The thorium-232 coefficient is not significant and the R^2 value does not meet the project DQO. Subsequently we conclude that thorium-232 and thorium-228 concentrations in soil are not significant predictors of gamma count rate. Finally, the p-value for radium-226 as a predictor of gamma count rate was significant ($p = 0.012$), as described above, and the adjusted R^2 value (0.87) exceeded the applicable project DQO ($R^2 > 0.8$).

The depletion of radon-222 in surface soil due to environmental factors is assumed to be relatively constant across the correlation locations (i.e., the loss is a fixed fraction of the available source). Provided this is the case, any loss of radon-222 in surface soil is unimportant and accounted for within the statistical model. If the loss is not a consistent fraction at each correlation location, it is one of many potential correlation confounders that are all linked to spatial heterogeneity of the environmental conditions, and especially spatial heterogeneity of the soil matrix.

The presence of heterogeneous concentrations of gamma emitting radionuclides in sub-surface soil can affect the gamma correlation model. If subsurface soil concentrations of gamma emitting radionuclides were variable between correlation locations, this variability would be included in the regression model, and if the magnitude of the effect were sufficiently large, it would result in failure of the DQOs related to the regression analysis.

3.2 Equilibrium in the uranium series

Secular equilibrium is a condition that occurs when the half-life of a decay-product nuclide is significantly shorter than that of its parent nuclide. After a period of ingrowth equal to approximately seven times the half-life of the decay product, the two nuclides effectively decay with the half-life of the parent. When two radionuclides are in secular equilibrium, their activities are equal.

Equilibrium, for the purpose of this report, is defined as a condition whereby a parent nuclide and its decay product are present in the environment at a fixed ratio, but this ratio – for whatever reason – is not a one-to-one relationship indicative of secular equilibrium. Most commonly, an equilibrium condition results from an environmental process which chemically selects for and transports one nuclide (parent or decay product) away from the other nuclide. Because a consistent fraction of one nuclide has been removed, the two nuclides are present at a fixed ratio other than one-to-one.

Determination of secular equilibrium for an AUM can be an important part of the risk assessment process, as the assumed fraction of radium-226 decay products present in the environment greatly influences a hypothetical receptor's radiation dose and mortality risk. However, it is also acceptable and conservative to assume secular equilibrium between radium-226 and its decay products for the purpose of risk assessment, and therefore to avoid the need to conclusively determine the secular equilibrium status of an AUM. Thus, an inconclusive result regarding secular equilibrium is not a study data gap, as the risk assessment phase may still proceed, provided that conservative assumptions are included regarding equilibrium concentrations of radium-226 decay products.

Regardless, the RSE Work Plan specified that an evaluation of secular equilibrium would be made at each of the 16 Trust AUMs, and so a robust statistical examination of secular equilibrium status for thorium-230 and radium-226 was conducted. The RSE Work Plan did not require an evaluation of equilibrium condition of uranium-238 and uranium-234 because the natural activity abundance for these isotopes is expected and therefore assumed. Likewise, thorium-234 and protactinium-234m were not evaluated since their half-lives are sufficiently short that secular equilibrium can be assumed. Uranium-235 is not in the uranium-238 decay therefore it was not evaluated. The ratio of thorium-230 to radium-226 can be evaluated even though different analytical methods were used to measure activity concentrations. Radium-226 was measured by EPA method 901.1m, which is a total activity method and thorium-230 was measured by alpha spectroscopy following digestion with hydrofluoric acid, which is also a total-activity method. Thus, it is appropriate to compare the two results.

The evaluation of secular equilibrium for each mine site proceeded as follows:

1. Construction of a figure that depicts soil concentrations of Th-230 plotted against soil concentrations of Ra-226.
2. Simple linear regression is performed on the dataset; the p-value and the adjusted R^2 are recorded. The resulting linear model and the 95% UCL bands are plotted on the figure generated in step 1.
3. The line y=x is added to the figure generated in step 2 (this line represents a perfect 1:1 ratio between Th-230 to Ra-226, indicative of secular equilibrium).
4. An examination of the model and the figure is made sequentially:
    a. If the p-value for the regression slope is insignificant (i.e., $p > 0.05$) or the adjusted R^2 does not meet the study's data quality objective (Adjusted $R^2 > 0.8$), ERG concludes that there is insufficient evidence to conclude that Ra-226 and Th-230 are in equilibrium (secular or otherwise).
    b. If the p-value for the regression slope is significant (i.e., $p < 0.05$) and the adjusted R^2 meets the DQO (Adjusted $R^2 > 0.8$) there are two possible conditions, which are evaluated via visual examination of the figure generated in step 3.

i. If the y=x line falls fully within the bounds of the 95% UCL bands on the regression, ERG concludes that there is evidence that Ra-226 and Th-230 are in secular equilibrium at the site.

ii. If the y=x line falls partially or completely outside the bounds of the 95% UCL bands on the regression, ERG concludes that there is evidence that Ra-226 and Th-230 are in equilibrium, but not secular equilibrium at the site.

Based on this method, ERG concludes there is evidence that thorium-230 and radium-226 are in equilibrium, but not secular equilibrium (Figure 10).

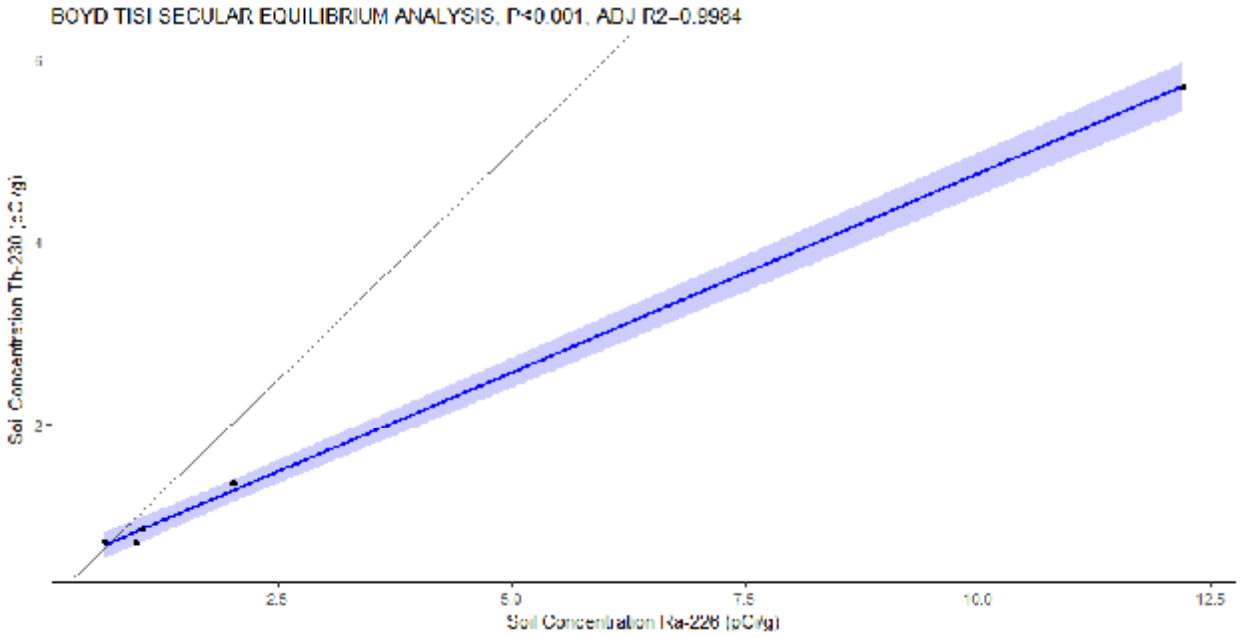

Figure 10. Evaluation of secular equilibrium in the uranium decay series.

3.3 Exposure rates and gamma count rates

Field personnel made co-located one-minute static count rate and exposure rate measurements at the five locations within the Survey Area, representing the range of gamma count rates obtained in the GPS-based gamma survey. Figure 7 shows the locations of the co-located measurements, which were made in the centers of the areas.

The gamma count rate and exposure rate measurements were made on October 26, 2016 at 0.5 m and 1 m above the ground surface, respectively. The gamma count rate measurements were made using one of the two sodium iodide detection system used in the GPS-based gamma survey of the AUM (Serial Number PR303727/254772). The exposure rate measurements were made using a Reuter Stokes Model RSS-131 high pressure ionization chamber (HPIC) at six-second intervals for about 10 minutes. The exposure rate used in the comparison was the mean of these measurements, less those occurring in initial instrument spikes. The HPIC was in current calibration and function checked before and after use.

A correction factor of 1.02 was applied to the measured value per the manufacturer's recommendation by the software of the unit. Calibration forms for the HPIC are provided in Appendix A.

Table 7 presents the results for the two types of measurements made at each of the five locations. Appendix B presents the individual (one second) exposure rate measurements.

The best predictive relationship between the measurements is linear with a R^2 of 0.9923. The root mean square error and p-value for the correlation are 1.091 and 0.0003, respectively; these parameters are not DQOs and are included only as information.

The following equation is the linear regression (shown in Figure 11) between the mean exposure rate and gamma count rate results in Table 7 that was generated using MS Excel:

$$\text{Exposure Rate } (\mu R/h) = 5 \times 10^{-4} \times \text{Gamma Count Rate (cpm)} + 7.0$$

Figure 12 presents the exposure rates predicted from the gamma count rate measurements, the spatial and numerical distribution of which mirror those depicted in Figure 4.

Tables 8 and 9, present summary statistics for the predicted exposure rates in the potential Background Reference Area and Survey Area, respectively. The range of predicted exposure rates at BG3 is 12.4 to 14.5 µR/h, with a mean and median of 13.4 µR/h. The range of predicted exposure rates in the Survey Area is 11.2 to 53.7 µR/h, with a mean and median of 13.1 and 12.9 µR/h, respectively.

Table 7. Co-located gamma count rate and exposure rate measurements.

Location	Gamma Count Rate[a] (cpm)	Exposure Rate (µR/h)
S135-C01-001	68,298	37.9
S135-C02-001	32,373	21
S135-C03-001	19,363	17.4
S135-C04-001	13,296	12.7
S135-C05-001	10,175	11

Notes:
[a]The gamma count rate is a one-minute, static measurement made at the center of the plot
cpm = counts per minute
µR/h = microRoentgens per hour

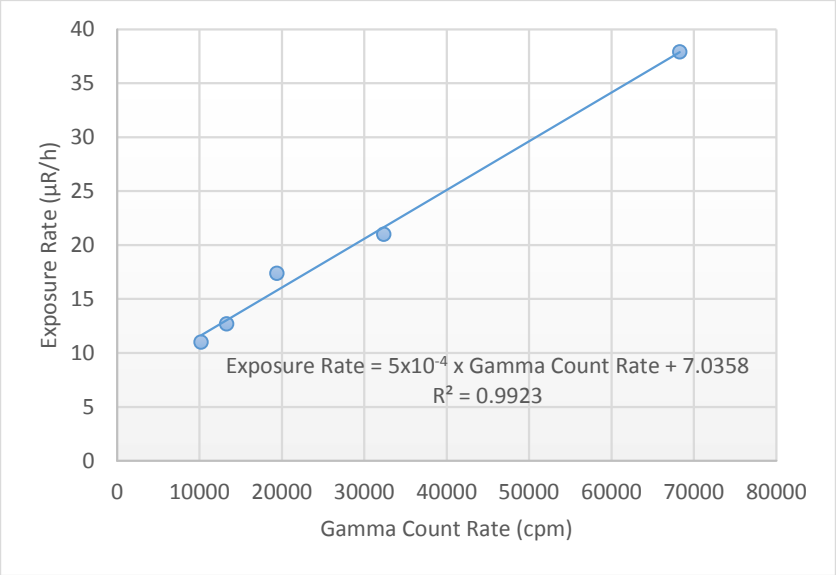

Figure 11. Correlation of gamma count rates and exposure rates.

Table 8. Predicted exposure rates in the potential Background Reference Area.

Parameter	Exposure Rate (µR/h)
n	116
Minimum	12.4
Maximum	14.5
Mean	13.4
Median	13.4
Standard Deviation	0.4

Notes:
µR/h = microRoentgens per hour

Table 9. Predicted exposure rates in the Survey Area.

Parameter	Exposure Rate (µR/h)
n	17,504
Minimum	11.2
Maximum	53.7
Mean	13.1
Median	12.9
Standard Deviation	1.7

Notes:
µR/h = microRoentgens per hour

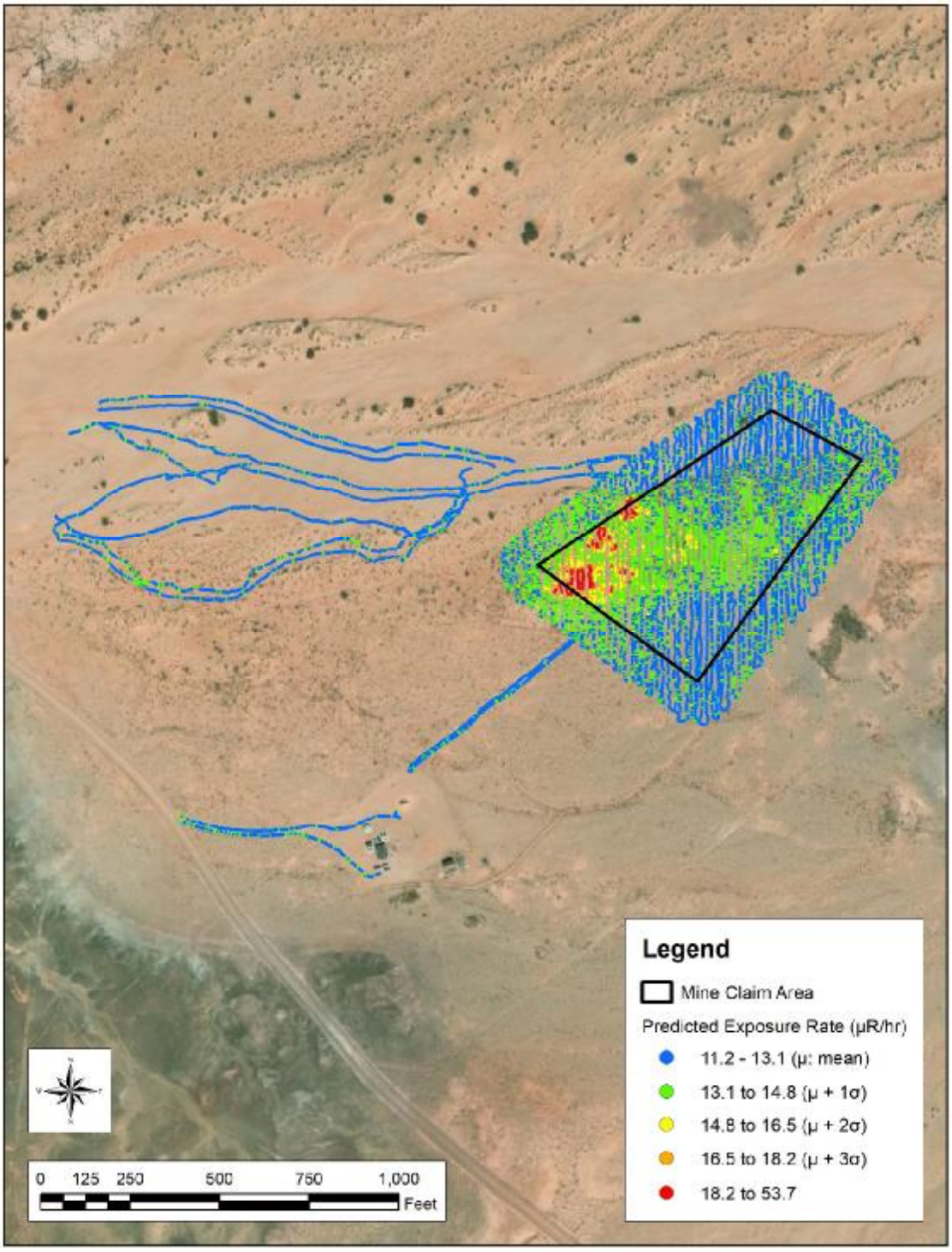

Figure 12. Predicted exposure rates in the Survey Area.

4.0 Deviations to RSE Workplan

The RSE Work Plan specifies that the comparison of gamma count rates and radium concentrations in surface soils was to occur in 900 square foot areas. Field personnel adjusted the areas as necessary, to minimize the variability of gamma count rates observed, particularly where the spatial distribution of waste rock was heterogeneous.

5.0 Conclusions

The findings of the RSE pertaining to these activities are:

- The horizontal extent and magnitude of mining-related materials were delineated sufficiently to support additional characterization of the subsurface.
- Elevated count rates were observed in the southwest corner of the mine claim at outcrops of bedrock and soils in an area that appeared to be a former waste pile.
- A potential Background Reference Area was established.
- The relationship between gamma count rates and concentrations of radium-226 in surface soils (0 to 0.5 ft below ground surface) is described by a linear regression model:

  Gamma Count Rate (cpm) = 3635 x [radium-226 (pCi/g)] + 14212

- The distribution of concentrations of radium-226 in surface soils predicted using this model is rightward tailed. The values in the Survey Area range from -1.6 to 21.8 pCi/g, with a central tendency (median) of -0.7 pCi/g.
- The thorium series radionuclides do not appear to affect the prediction of concentrations of radium-226 from gamma count rates.
- There is evidence that thorium-230 and radium-226 are in equilibrium, but not secular equilibrium.
- The relationship between gamma count rates and exposure rates is described by a linear regression model:

  Exposure Rate (microRoentgens per hour [µR/h]) = Gamma Count Rate (cpm) x $5x10^{-4}$ + 7.0

- The distribution of exposure rates predicted using this model is rightward tailed. The values in the Survey Area range from 11.2 to 53.7, with a central tendency (median) of 12.9 µR/h.
- Further work is recommended to support a robust gamma correlation.

6.0 References

MWH, 2016. Navajo Nation AUM Environmental Response Trust, First Phase, Removal Site Evaluation Work Plan, October 24, 2016.

Stantec, 2018. Boyd Tisi No. 2 Removal Site Evaluation Report (to be finalized in October 2018).

Appendix A Instrument calibration and completed function check forms

Certificate of Calibration

Calibration and Voltage Plateau

Environmental Restoration Group, Inc.
8809 Washington St NE, Suite 150
Albuquerque, NM 87113
(505) 298-4224
www.ERGoffice.com

Meter: Manufacturer: Ludlum Model Number: 2221r Serial Number: 196086

Detector: Manufacturer: Ludlum Model Number: 44-10 Serial Number: PR295014

- ✔ Mechanical Check
- ✔ F/S Response Check
- ✔ Geotropism
- ✔ Meter Zeroed
- ✔ THR/WIN Operation
- ✔ Reset Check
- ✔ Audio Check
- ✔ Battery Check (Min 4.4 VDC)

HV Check (+/- 2.5%): ✔ 500 V ✔ 1000 V ✔ 1500 V

Cable Length: 39-inch ✔ 72-inch Other:

Source Distance: Contact ✔ 6 inches Other:

Source Geometry: ✔ Side Below Other:

Threshold: 10 mV

Window:

Barometric Pressure: 24.78 inches Hg

Temperature: 74 °F

Relative Humidity: 20 %

Instrument found within tolerance: ✔ Yes No

Range Multiplier	Reference Setting	"As Found Reading"	Meter Reading	Integrated 1-Min. Count	Log Scale Count
x 1000	400	400	400	399802	400
x 1000	100	100	100		100
x 100	400	400	400	39989	400
x 100	100	100	100		100
x 10	400	400	400	3999	400
x 10	100	100	100		100
x 1	400	400	400	400	400
x 1	100	100	100		100

High Voltage	Source Counts	Background
700	28456	
800	53330	
900	64430	
950	66209	
1000	68333	
1050	69077	
1100	69121	8924
1150	69973	
1200	70155	

Voltage Plateau

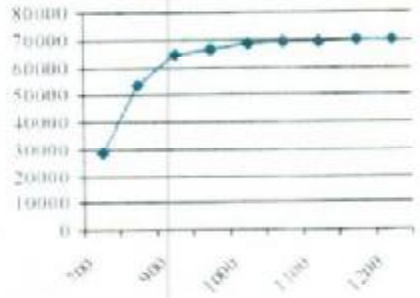

Comments: HV Plateau Scaler Count Time = 1-min. Recommended HV = 1100

Reference Instruments and/or Sources:

Ludlum pulser serial number: 97743 ✔ 201932

Alpha Source: Th-230 @ 12,800 dpm (1/4/12) sn: 4098-03

Beta Source: Tc-99 @ 17,700 dpm (1/4/12) sn: 4099-03

Fluke multimeter serial number: 87490128

✔ Gamma Source: Cs-137 @ 5.2 uCi (1/4/12) sn: 4097-03

Other Source:

Calibrated By:

Calibration Date: 7/20/16 Calibration Due: 7/20/17

Reviewed By:

Date: 7/20/16

This calibration conforms to the requirements and acceptable calibration conditions of ANSI N323A-1997

Environmental Restoration Group, Inc.
8809 Washington St NE, Suite 150
Albuquerque, NM 87113
(505) 298-4224
www.ERGoffice.com

Certificate of Calibration

Calibration and Voltage Plateau

Meter: Manufacturer: Ludlum Model Number: 2221r Serial Number: 254772

Detector: Manufacturer: Ludlum Model Number: 44-10 Serial Number: PR303727

HV Check (+/- 2.5%): ✔ 500 V ✔ 1000 V ✔ 1500 V

Cable Length: ☐ 39-inch ✔ 72-inch ☐ Other:

✔ Mechanical Check ✔ THR/WIN Operation
✔ F/S Response Check ✔ Reset Check
✔ Geotropism ✔ Audio Check
✔ Meter Zeroed ✔ Battery Check (Min 4.4 VDC)

Source Distance: ☐ Contact ✔ 6 inches ☐ Other:

Source Geometry: ✔ Side ☐ Below ☐ Other:

Threshold: 10 mV

Window:

Barometric Pressure: 24.24 inches Hg
Temperature: 78 °F
Relative Humidity: 20 %

Instrument found within tolerance: ✔ Yes ☐ No

Range/Multiplier	Reference Setting	"As Found Reading"	Meter Reading	Integrated 1-Min. Count	Log Scale Count
x 1000	400	400	400	399859	400
x 1000	100	100	100		100
x 100	400	400	400	39991	400
x 100	100	100	100		100
x 10	400	400	400	4001	400
x 10	100	100	100		100
x 1	400	400	400	400	400
x 1	100	100	100		100

High Voltage	Source Counts	Background
700	52821	
800	65213	
900	68644	
950	69245	
1000	69492	9111
1050	69792	
1100	70472	
1150	71183	
1200	70571	

Voltage Plateau

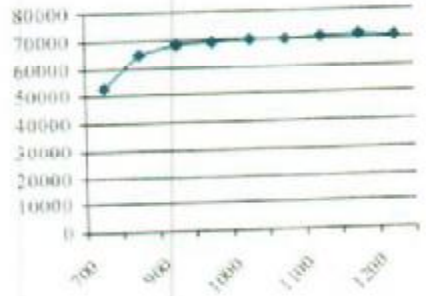

Comments: HV Plateau Scaler Count Time = 1-min. Recommended HV = 1000

Reference Instruments and/or Sources:

Ludlum pulser serial number: ☐ 97743 ✔ 201932

☐ Alpha Source: Th-230 @ 12,800 dpm (1/4/12) sn: 4098-03

☐ Beta Source: Tc-99 @ 17,700 dpm (1/4/12) sn: 4099-03

Fluke multimeter serial number: 87490128

✔ Gamma Source Cs-137 @ 5.2 uCi (1/4/12) sn: 4097-03

☐ Other Source:

Calibrated By:

Reviewed By:

Calibration Date: ~~2 March 17~~ 2/28/17 ESB

Calibration Due: ~~2 March 18~~ 2/28/18 ESB

Date: 3-1-17

This calibration conforms to the requirements and acceptable calibration conditions of ANSI N323A - 1997

Certificate of Calibration

Calibration and Voltage Plateau

Environmental Restoration Group, Inc.
8809 Washington St. NE, Suite 150
Albuquerque, NM 87113
(505) 298-4224
www.ERGoffice.com

Meter: Manufacturer: Ludlum Model Number: 2221r Serial Number: 254772

Detector: Manufacturer: Ludlum Model Number: 44-10 Serial Number: PR303727

- ✔ Mechanical Check
- ✔ F/S Response Check
- ✔ Geotropism
- ✔ Meter Zeroed
- ✔ THR WIN Operation
- ✔ Reset Check
- ✔ Audio Check
- ✔ Battery Check (Min 4.4 VDC)

HV Check (+ - 2.5%): ✔ 500 V ✔ 1000 V ✔ 1500 V

Cable Length: 39-inch ✔ 72-inch Other:

Source Distance: Contact ✔ 6 inches Other:

Source Geometry: ✔ Side Below Other:

Threshold: 10 mV

Window:

Barometric Pressure: 24.75 inches Hg

Temperature: 74 °F

Relative Humidity: 20 %

Instrument found within tolerance: ✔ Yes No

Range Multiplier	Reference Setting	"As Found Reading"	Meter Reading	Integrated 1-Min. Count	Log Scale Count
x 1000	400	400	400	398857	400
x 1000	100	100	100		100
x 100	400	400	400	39913	400
x 100	100	100	100		100
x 10	400	400	400	3992	400
x 10	100	100	100		100
x 1	400	400	400	399	400
x 1	100	100	100		100

High Voltage	Source Counts	Background
700	53620	
800	64979	
900	67955	
950	67795	
1000	68536	9542
1050	69153	
1100	69331	
1150	69346	
1200	69492	

Voltage Plateau

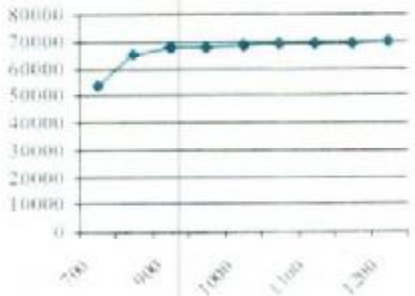

Comments: HV Plateau Scaler Count Time = 1-min. Recommended HV = 1000

Reference Instruments and/or Sources:

Ludlum pulser serial number: 97743 ✔ 201932

Fluke multimeter serial number: 87490128

Alpha Source: Th-230 @ 12,800 dpm (1-4-12) sn: 4098-03

✔ Gamma Source: Cs-137 @ 5.2 uCi (1-4-12) sn: 4097-03

Beta Source: Tc-99 @ 17,700 dpm (1-4-12) sn: 4099-03

Other Source:

Calibrated By:

Calibration Date: 7-6-16 Calibration Due: 7-6-17

Reviewed By:

Date: 7/20/16

ERG Form ITC-101.A

This calibration conforms to the requirements and acceptable calibration conditions of ANSI N323A-1997

K&S Associates, Inc.
1926 Elm Tree Drive
Nashville, Tennessee 37210-3718
Phone 800-522-2325 Fax 615-871-0856

ACCREDITED
CALIBRATION CERT #1866.01

CALIBRATION REPORT

SUBMITTED BY: ERG
8809 Washington Street Northeast
Suite 150
Albuquerque, NM 87113

INSTRUMENT: Reuter Stokes RSS-131, #07J00KM1

REPORT NUMBER: 161866
TEST NUMBER(S) M161588
REPORT DATE: June 29, 2016

The CALIBRATION COEFFICIENTS contained in this report were obtained by intercomparison with instruments calibrated by, or directly traceable to, the National Institute of Standards and Technology (NIST). K• S Associates, Inc. is licensed by the State of Tennessee (R-19075-G97, R-19136-B00) to perform calibrations, and is recognized by the Health Physics Society (HPS) as an ACCREDITED INSTRUMENT CALIBRATION LABORATORY. As part of the accreditation K • S participates in a measurement assurance program conducted by the HPS and NIST. K • S also certifies that the calibration was performed using quality policies, methods and procedures that meet or exceed the requirements of ISO/IEC 17025:2005.

This laboratory is accredited by the American Association for Laboratory Accreditation (A2LA) and the results shown in this report have been determined in accordance with the laboratory's terms of accreditation unless stated otherwise in this report

The CALIBRATION COEFFICIENTS stated herein are valid under the conditions specified. It is the instrument user's responsibility to perform the appropriate constancy tests prior to shipment and after return from calibration. It is also the responsibility of the user to assure that the interpretation of the information in this report is consistent with that intended by K • S Associates, Inc.

This report may not be reproduced except in full without the written permission of K• S Associates, Inc.

K&S Associates, Inc
Nashville, Tennessee 37210-3718

ACCREDITED

CALIBRATION CERTIFICATE

Calibration Date: 6/27/2016 Report Number: 161866 Test Number: M161588

K&S certifies that the environmental radiation monitor identified below has been calibrated for radiation measurement using collimated radiation sources whose output has been calibrated with instruments calibrated by or directly traceable to the National Institute of Standards and Technology. K&S is accredited by the American Association for Laboratory Accreditation to perform environmental level calibrations and further certifies that the calibration was performed using accredited policies and procedures (SI 25) that meet or exceed the requirements of ISO/IEC 17025:2005.

Sensor Type: 100 mR/h

Serial Number: 07J00KM1

Average Calibration Coefficient for the range of 0.012 mR/h – 0.220 mR/h*:
1.02 mR/"mR" reading
(Measured at 4 points)

Calibration Coefficient for the 50.0 mR/h point*:
1.12 mR/"mR" reading

Calibration Coefficient for the 80.0 mR/h point*:
1.10 mR/"mR" reading

Found RAC: 2.169e-8

*Multiply the reading in **mR/h** by the Calibration Coefficient to obtain true **mR/h**.

Calibrated By: Richard Hardison Reviewed By:

Richard Hardison
Calibration Technician

Title: Calibration Technician Title: Calibration Physicist

Log: M-53 Page: 73

K&S Associates, Inc
Nashville, Tennessee 37210-3718

ACCREDITED

AS FOUND DATA
Reuter-Stokes Chamber Calibration

June 27, 2016 *Test Number* *M161588*

CHAMBER:

Mfgr: Reuter Stokes

Model: RSS-131

Serial: 07J00KM1

SUBMITTED BY:

ERG

Albuquerque, NM

ATMOSPHERIC COMMUNICATION: SEALED

ORIENTATION/CONDITIONS:

Serial number away from source

"True" background exposure rate of 6.7 uR/h, instrument reading was 0.0076 mR/h

POLARIZING POTENTIAL 401V

LEAKAGE: negligible

BEAM QUALITY		EXPOSURE RATE		CALIBRATION COEFFICIENT	UNCERT	LOG
CsEn220	(11mCi)	0.22mR/h	N_x=	1.00 mR/h/rdg	11%	M-53 73
CsEn80	(11mCi)	0.08mR/h	N_x=	1.03 mR/h/rdg	11%	
CsEnv12	(1mCi)	0.012mR/h	N_x=	1.01 mR/h/rdg	11%	
CsEnv15	(1mCi)	0.015mR/h	N_x=	1.02 mR/h/rdg	11%	
Cs199m	(20 Ci)	50mR/h	N_x=	1.12 mR/h/rdg	8%	
Cs252m	(20 Ci)	80mR/h	N_x=	1.10 mR/h/rdg	8%	

Comments Batt: 6.1V, Temp: 24.6 deg C, K&S Environment: Temp:21 deg C , RH 59%, Press: 752 mmHg:
Report Number: 161866
Refer to Appendix I of this report for details on PIC ionization chamber calibrations. Procedure: SI 25
RAC Found: 2.169e-8

Calibrated By Richard Hardison **Reviewed By:**

Title: Calibration Technician **Title:**

Checked By: **Prepared By:** REH

Form RSS

ERG

Single-Channel Function Check Log

Environmental Restoration Group, Inc
8809 Washington St. NE, Suite 150
Albuquerque, NM 87113
(505) 298-4224

~~METER~~ STET Detector	
Manufacturer:	Ludlum
Model:	2221
Serial No.:	138638
Cal. Due Date:	7-9-17

~~DETECTOR~~ STET Meter	
Manufacturer:	Ludlum
Model:	44-10
Serial No.:	PR154615
Cal. Due Date:	7-9-17

Comments:
NNERT

Source: Cs-137 Activity: 5.12 uCi Source Date: 6-6-94 Distance to Source: 6 inches

Serial No.: 333-94 Emission Rate: NA cpm/emissions

Date	Time	Battery	High Voltage	Threshhold	Source Counts	BKG Counts	Net Counts	Initials	Note(s):
10-5-16	0900	5.9	1184	165	46216	7136	39080	NW	Tsosie 1 ref. pt.
10-5-16	1546	5.7	1198	185	45357	6266	39091	NW	
10-8-16	0837	5.7	1182	164	45202	6004	39198	NW	Intersection to Oak @ Red Valley
10-8-16	1702	5.6	1128	112	49505	6399	43106	NW	Comf. Suites F-ton
10-12-16	1334	5.7	1139	122	46929	6807	40122	NW	Barton 3 ref. pt
10-12-16	1610	5.6	1134	115	44390	6093	38297	NW	Comfort Suites F-ton
10-13-16	0917	5.6	1129	110	44223	7099	37124	NW	Alonzo ref pt.
10-13-16	1910	~~5.5~~ NW	~~9~~ NW			Did not use		NW	Comfort Suites ref pt.
10-15-16	0929	5.7	1173	160	47369	7023	40346	NW	Harvey Blackwater
10-15-16	1821	5.7	1173	163	42767	5169	37598	NW	Hat Rock Inn Lot
10-26-16	0755	5.7	1223	202	50474	8000	42474	NW	Boyd Tisi
10-26-16	1540	5.6	1152	138	45033	6331	38702	NW	Boyd Tisi

Reviewed by: [signature] Review Date: 11/29/16

ERG

Single-Channel Function Check Log

Environmental Restoration Group, Inc
8809 Washington St. NE, Suite 150
Albuquerque, NM 87113
(505) 298-4224

METER	
Manufactuer:	Ludlum
Model:	2221
Serial No.:	254792
Cal. Due Date:	7-19-17

DETECTOR	
Manufacturer:	Ludlum
Model:	44-10
Serial No.:	PR303727
Cal. Due Date:	7-19-17

Comments:
NNSRT

Source: Cs-137 Activity: 5.12 uCi Source Date: 6-6-94 Distance to Source: 6 Inches

Serial No.: 333-94 Emission Rate: ND cpm/emissions

Date	Time	Battery	High Voltage	Threshhold	Source Counts	BKG Counts	Net Counts	Initials	Note(s): Project reference points
10-11-16	0927	5.5	1002	99	45599	6141	39858	MW	NA-0904
10-11-16	1720	5.5	998	99	48630	6576	42054	MW	Comfort Suites Parking Lot
10-12-16	0858	5.5	1003	99	44980	5506	39474	MW	NA-0928
10-12-16	1618	5.5	998	99	43779	6289	37490	MW	Comfort Suites Parking Lot
10-13-16	0911	5.5	1003	99	46726	7375	39351	MW	Alonga
10-13-16	1910	5.5	990	99	45235	6618	38617	MW	Comfort Suites Parking Lot
10-14-16	0926	5.5	1004	99	45657	7242	38415	MW	Berton 3
10-14-16	1540	5.4	998	99	44751	6480	38271	MW	Comfort Suites Parking Lot
10-15-16	0927	5.5	1001	99	45697	6933	38764	MW	Henry Blackwater
10-15-16	1824	5.4	996	99	42528	4945	37583	MW	Hat Rock Inn Parking Lot
10-24-16	0800	6.2	1005	100	48507	9260	39237	MW	Boyd Tisi
10-24-16	1207	6.0	1001	99	46290	8126	38164	MW	Boyd Tisi

a. Changed battery

Reviewed by: MW Review Date: 11/29/16

ERG

Single-Channel Function Check Log

Environmental Restoration Group, Inc.
8809 Washington St. NE, Suite 150
Albuquerque, NM 87113
(505) 298-4224

METER	
Manufacturer:	Ludlum
Model:	2221
Serial No.:	196086
Cal. Due Date:	7-9-17

DETECTOR	
Manufacturer:	Ludlum
Model:	44-10
Serial No.:	PR ~~303727~~ 295014 NW
Cal. Due Date:	7-9-17

Comments:
NNERT

Source: Cs-137 Activity: 5.12 uCi Source Date: 6-6-94 Distance to Source: 6 inches

Serial No.: 333-94 Emission Rate: NA cpm/emissions

Date	Time	Battery	High Voltage	Threshhold	Source Counts	BKG Counts	Net Counts	Initials	Note(s): Project reference points
10-15-16	0930	5.4	1100	100	45919	7086	38833	NW	Harvey Blackwater
10-15-16	1828	5.3	1094	100	44133	4794	39339	NW	Hat Rock Inn Lot
10-24-16	0802	5.4	1106	100	47875	8702	39173	NW	Boyd Tisi
10-24-16	1211	5.2	1099	100	45787	8272	37515	NW	Boyd Tisi
10-27-16	1000	5.4	1106	100	48630	8414	40216	NW	Harvey Blackwater
10-27-16	1601	5.2	1099	99	48326	8166	40160	NW	Harvey Blackwater
10-28-16	1401	5.3	1101	100	43141	4755	38386	NW	Mitten No. 3
10-28-16	1700	5.2	1101	99	43075	4698	38377	NW	Mitten No. 3
10-29-16	0812	5.3	1105	100	44174	4908	39266	NW	Mitten No. 3
10-29-16	~~08~~ NW 1346	5.2	1098	100	42452	4621	37831	NW	Mitten No. 3
10-31-16	0835	5.3	1105	101	42258	4609	37649	NW	Mitten No. 3
10-31-16	1655	5.3	1100	100	42630	4963	37667	NW	Goulding's back SUV

Reviewed by: MA Review Date: 11/29/16

Single-Channel Function Check Log

Environmental Restoration Group, Inc.
8809 Washington St. NE, Suite 150
Albuquerque, NM 87113
(505) 298-4224

METER	
Manufacturer:	Ludlum?
Model:	2221
Serial No.:	254772
Cal. Due Date:	7.19.17

DETECTOR	
Manufacturer:	Ludlum
Model:	44-10
Serial No.:	PR303727
Cal. Due Date:	7.19.17

Comments:
NNEAT

Source: Cs-137 Activity: 5.12 uCi Source Date: 6-6-94 Distance to Source: 6 inches

Serial No.: 333-94 Emission Rate: NA cpm/emissions

Date	Time	Battery	High Voltage	Threshhold	Source Counts	BKG Counts	Net Counts	Initials	Note(s): PROJECT REFERENCE POINT
10-26-16	0637	6.1	1008	99	46974	7833	39141	NW	BOYD TISI
10-26-16	1545	6.1	992	98	42850	5959	36891	NW	BOYD TISI
10-27-16	1005	6.0	1004	99	48059	8561	39498	NW	Harvey Blackwater
10-27-16	1555	5.9	999	99	48564	8465	40099	NW	Harvey Blackwater
10-28-16	0808	5.9	1004	99	46814	9142	37672	NW	Harvey Blackwater
10-28-16	1704	5.8	1000	99	43711	5178	38533	NW	Mitka No. 3
10-29-16	0807	5.9	1005	100	43690	5203	38487	NW	Mitka No. 3
10-29-16	1342	5.8	999	99	44561	4801	39760	NW	Mitka No. 3
10-31-16	0840	5.8	1004	99	42426	5054	37372	NW	Mitka #0. 3
10-31-16	1507	5.8	999	99	44206	5069	39137	NW	Goulding's back SUV
11-1-16	0748	5.8	1006	100	44941	5342	39599	NW	Charles Keith
11-1-16	1722	5.7	1003	99	44858	5117	39741	NW	Goulding's back of SUV

Reviewed by: MM Review Date: 11/29/16

Single-Channel Function Check Log

Environmental Restoration Group, Inc.
8809 Washington St. NE, Suite 150
Albuquerque, NM 87113
(505) 298-4224

METER	
Manufacturer:	GE
Model:	RS3-131
Serial No.:	07J00KM1
Cal. Due Date:	6-29-17

DETECTOR	
Manufacturer:	SAME AS METER
Model:	
Serial No.:	
Cal. Due Date:	

Comments:
NNERT

Source: Cs-137 Activity: 5.12 uCi Source Date: 6-6-94 Distance to Source: Contact-housing

Serial No.: 333-94 Emission Rate: NA cpm/emissions

Date	Time	Battery	High Voltage	Threshhold	Source Counts	BKG Counts	Net Counts	Initials	Note(s): Project reference points (mR/h / µR/h)
10-26-16	0525	~6.4	~400	NA	~27.8	~10.5	~17.3	NW	Best Western room - Flagstaff
10-26-16	2010	~6.3	~400	NA	~26	~9.5	~16.5	NW	Goulding's room / Best Western room - Flagstaff NW
10-27-16	0720	~6.2	~400	NA	~26.7	~10.0	~16.7	NW	Goulding's room
10-29-16	1710	~6.2	~400	NA	~27.0	~10.8	~16.2	NW	Goulding's room
10-31-16	0609	~6.3	~400	NA	~27.0	~10	~16	NW	Goulding's room
10-31-16	1520	~6.3	~400	NA	~26	~10	~16	NW	Goulding's room
11-3-16	0700	~6.2	~400	NA	~26.5	~10.5	~16	NW	Goulding's room
11-3-16	1924	~6.1	~400	NA	~28.8	~12.5	~16.3	NW	Holiday Inn Chinle-room
11-9-16	0615	~6.3	~400	NA	~30	~12.8	~17.2	NW	Holiday Inn-Chinle room
11-9-16	1430	~6.2	~400	NA	~29.5	~12.5	~17	NW	Holiday Inn Chinle - room
11-11-16	0610	~6.4	~400	NA	~31.5	~13.5	~18	NW	Holiday Inn Chinle - room
11-11-16	1825	~6.2	~400	NA	~28	~11	~17	NW	Holiday Inn Chinle - room

Reviewed by: MW Review Date: 11-29-16

Single-Channel Function Check Log

Environmental Restoration Group, Inc.
8809 Washington St. NE, Suite 150
Albuquerque, NM 87113
(505) 298-4224

METER	
Manufacturer:	Ludlum
Model:	2221
Serial No.:	254772
Cal. Due Date:	2-20-18

DETECTOR	
Manufacturer:	Ludlum
Model:	44-10
Serial No:	PR 303727
Cal. Due Date:	2-20-18

Comments:
NNERT

Source: Cs-137 Activity: 4 uCi Source Date: 4-18-96 Distance to Source: 6 inches

Serial No.: 544-96 Emission Rate: N/A cpm/emissions

Date	Time	Battery	High Voltage	Threshhold	Source Counts	BKG Counts	Net Counts	Initials	Note(s):
3-16-17	1322	6.2	947	100	40116	7260	32856	NW	Cameron Trailing Post lot
3-16-17	1555	6.1	942	99	38642	5986	32657	NW	Boyd Tisi
3-17-17	0812	6.2	951	100	40027	7965	32122	NW	Cameron Trailing Post lot
3-17-17	1328	6.1	943	100	42203	10206	31997	NW	Boyd Tisi ~200 ft from B64
3-18-17	0730	6.1	949	100	38598	6950	31648	NW	Harvey Blackwater
3-18-17	1505	6.0	941	100	35954	5035	30919	NW	Mitten No. 3
3-19-17	0651	6.1	949	99	36982	4952	32030	NW	Goulding's lot
3-19-17	1217	5.9	945	99	36802	5103	31699	NW	Charles Keith south of claim
3-20-17	0955	6.0	950	100	40829	8989	31840	NW	Claim 28
3-20-17	1555	5.9	943	100	37489	5569	32280	NW	Chinle parking lot
3-21-17	0635	5.9	950	100	38433	5735	32698	NW	Chinle lot
3-21-17	1657	5.9	946	100	36747	4997	31800	NW	Goulding's lot

Reviewed by: MW Review Date: 10/17/17

Appendix B Exposure Rate Measurements

Date and Time	Exposure Rate (mR/h)	Location
10/26/2016 9:42	0.059	Correlation Location 1
10/26/2016 9:42	0.1075	Correlation Location 1
10/26/2016 9:42	0.1015	Correlation Location 1
10/26/2016 9:42	0.0787	Correlation Location 1
10/26/2016 9:42	0.061	Correlation Location 1
10/26/2016 9:42	0.05	Correlation Location 1
10/26/2016 9:42	0.0438	Correlation Location 1
10/26/2016 9:42	0.0405	Correlation Location 1
10/26/2016 9:42	0.0393	Correlation Location 1
10/26/2016 9:43	0.0384	Correlation Location 1
10/26/2016 9:43	0.0381	Correlation Location 1
10/26/2016 9:43	0.0379	Correlation Location 1
10/26/2016 9:43	0.0381	Correlation Location 1
10/26/2016 9:43	0.0385	Correlation Location 1
10/26/2016 9:43	0.0383	Correlation Location 1
10/26/2016 9:43	0.038	Correlation Location 1
10/26/2016 9:43	0.038	Correlation Location 1
10/26/2016 9:43	0.038	Correlation Location 1
10/26/2016 9:43	0.0381	Correlation Location 1
10/26/2016 9:44	0.0383	Correlation Location 1
10/26/2016 9:44	0.0384	Correlation Location 1
10/26/2016 9:44	0.0383	Correlation Location 1
10/26/2016 9:44	0.0377	Correlation Location 1
10/26/2016 9:44	0.0377	Correlation Location 1
10/26/2016 9:44	0.038	Correlation Location 1
10/26/2016 9:44	0.0384	Correlation Location 1
10/26/2016 9:44	0.0381	Correlation Location 1
10/26/2016 9:44	0.0378	Correlation Location 1
10/26/2016 9:44	0.0373	Correlation Location 1
10/26/2016 9:45	0.0372	Correlation Location 1
10/26/2016 9:45	0.0376	Correlation Location 1
10/26/2016 9:45	0.0381	Correlation Location 1
10/26/2016 9:45	0.0376	Correlation Location 1
10/26/2016 9:45	0.0376	Correlation Location 1
10/26/2016 9:45	0.0374	Correlation Location 1
10/26/2016 9:45	0.0374	Correlation Location 1
10/26/2016 9:45	0.0375	Correlation Location 1
10/26/2016 9:45	0.0375	Correlation Location 1
10/26/2016 9:45	0.0377	Correlation Location 1
10/26/2016 9:46	0.0376	Correlation Location 1
10/26/2016 9:46	0.0373	Correlation Location 1
10/26/2016 9:46	0.0373	Correlation Location 1
10/26/2016 9:46	0.0374	Correlation Location 1
10/26/2016 9:46	0.0372	Correlation Location 1
10/26/2016 9:46	0.0372	Correlation Location 1
10/26/2016 9:46	0.0375	Correlation Location 1
10/26/2016 9:46	0.0377	Correlation Location 1
10/26/2016 9:46	0.0381	Correlation Location 1
10/26/2016 9:46	0.0381	Correlation Location 1
10/26/2016 9:47	0.0379	Correlation Location 1
10/26/2016 9:47	0.0381	Correlation Location 1
10/26/2016 9:47	0.0381	Correlation Location 1
10/26/2016 9:47	0.0378	Correlation Location 1
10/26/2016 9:47	0.0378	Correlation Location 1
10/26/2016 9:47	0.0379	Correlation Location 1
10/26/2016 9:47	0.0377	Correlation Location 1
10/26/2016 9:47	0.038	Correlation Location 1
10/26/2016 9:47	0.0381	Correlation Location 1
10/26/2016 9:47	0.0384	Correlation Location 1
10/26/2016 9:48	0.0385	Correlation Location 1
10/26/2016 9:48	0.0383	Correlation Location 1
10/26/2016 9:48	0.0376	Correlation Location 1
10/26/2016 9:48	0.0374	Correlation Location 1
10/26/2016 9:48	0.0373	Correlation Location 1
10/26/2016 9:48	0.0373	Correlation Location 1
10/26/2016 9:48	0.0374	Correlation Location 1
10/26/2016 9:48	0.0374	Correlation Location 1
10/26/2016 9:48	0.0376	Correlation Location 1
10/26/2016 9:48	0.0377	Correlation Location 1
10/26/2016 9:49	0.038	Correlation Location 1
10/26/2016 9:49	0.0379	Correlation Location 1
10/26/2016 9:49	0.0375	Correlation Location 1
10/26/2016 9:49	0.0378	Correlation Location 1
10/26/2016 9:49	0.0381	Correlation Location 1
10/26/2016 9:49	0.038	Correlation Location 1
10/26/2016 9:49	0.0377	Correlation Location 1
10/26/2016 9:49	0.0377	Correlation Location 1
10/26/2016 9:49	0.0373	Correlation Location 1
10/26/2016 9:49	0.0376	Correlation Location 1
10/26/2016 9:50	0.0383	Correlation Location 1
10/26/2016 9:50	0.0381	Correlation Location 1
10/26/2016 9:50	0.0383	Correlation Location 1
10/26/2016 9:50	0.0385	Correlation Location 1
10/26/2016 9:50	0.0381	Correlation Location 1
10/26/2016 9:50	0.0377	Correlation Location 1
10/26/2016 9:50	0.0376	Correlation Location 1
10/26/2016 9:50	0.0373	Correlation Location 1
10/26/2016 9:50	0.0374	Correlation Location 1

Date and Time	Exposure Rate (mR/h)	Location
10/26/2016 9:50	0.0378	Correlation Location 1
10/26/2016 9:51	0.038	Correlation Location 1
10/26/2016 9:51	0.0381	Correlation Location 1
10/26/2016 9:51	0.0379	Correlation Location 1
10/26/2016 9:51	0.0381	Correlation Location 1
10/26/2016 9:51	0.0383	Correlation Location 1
10/26/2016 9:51	0.0385	Correlation Location 1
10/26/2016 9:51	0.0389	Correlation Location 1
10/26/2016 9:51	0.0389	Correlation Location 1
10/26/2016 9:51	0.0384	Correlation Location 1
10/26/2016 9:51	0.0384	Correlation Location 1
10/26/2016 9:52	0.0387	Correlation Location 1
10/26/2016 9:52	0.0389	Correlation Location 1
10/26/2016 9:52	0.0385	Correlation Location 1
10/26/2016 9:52	0.0381	Correlation Location 1
10/26/2016 9:52	0.0377	Correlation Location 1
10/26/2016 9:52	0.0377	Correlation Location 1
10/26/2016 9:52	0.0377	Correlation Location 1
10/26/2016 9:52	0.0378	Correlation Location 1
10/26/2016 9:52	0.0378	Correlation Location 1
10/26/2016 9:52	0.0373	Correlation Location 1
10/26/2016 10:06	0.0555	Correlation Location 2
10/26/2016 10:06	0.0983	Correlation Location 2
10/26/2016 10:06	0.0884	Correlation Location 2
10/26/2016 10:07	0.0638	Correlation Location 2
10/26/2016 10:07	0.0451	Correlation Location 2
10/26/2016 10:07	0.0336	Correlation Location 2
10/26/2016 10:07	0.0272	Correlation Location 2
10/26/2016 10:07	0.0237	Correlation Location 2
10/26/2016 10:07	0.0218	Correlation Location 2
10/26/2016 10:07	0.0211	Correlation Location 2
10/26/2016 10:07	0.0207	Correlation Location 2
10/26/2016 10:07	0.0206	Correlation Location 2
10/26/2016 10:07	0.0207	Correlation Location 2
10/26/2016 10:08	0.0206	Correlation Location 2
10/26/2016 10:08	0.0206	Correlation Location 2
10/26/2016 10:08	0.0208	Correlation Location 2
10/26/2016 10:08	0.0211	Correlation Location 2
10/26/2016 10:08	0.0213	Correlation Location 2
10/26/2016 10:08	0.0213	Correlation Location 2
10/26/2016 10:08	0.0211	Correlation Location 2
10/26/2016 10:08	0.0209	Correlation Location 2
10/26/2016 10:08	0.0208	Correlation Location 2
10/26/2016 10:08	0.0207	Correlation Location 2
10/26/2016 10:09	0.021	Correlation Location 2
10/26/2016 10:09	0.021	Correlation Location 2
10/26/2016 10:09	0.0211	Correlation Location 2
10/26/2016 10:09	0.0211	Correlation Location 2
10/26/2016 10:09	0.0211	Correlation Location 2
10/26/2016 10:09	0.021	Correlation Location 2
10/26/2016 10:09	0.0208	Correlation Location 2
10/26/2016 10:09	0.0205	Correlation Location 2
10/26/2016 10:09	0.0206	Correlation Location 2
10/26/2016 10:09	0.0209	Correlation Location 2
10/26/2016 10:10	0.0211	Correlation Location 2
10/26/2016 10:10	0.0213	Correlation Location 2
10/26/2016 10:10	0.0211	Correlation Location 2
10/26/2016 10:10	0.0213	Correlation Location 2
10/26/2016 10:10	0.0213	Correlation Location 2
10/26/2016 10:10	0.0211	Correlation Location 2
10/26/2016 10:10	0.0208	Correlation Location 2
10/26/2016 10:10	0.0207	Correlation Location 2
10/26/2016 10:10	0.0205	Correlation Location 2
10/26/2016 10:10	0.0204	Correlation Location 2
10/26/2016 10:11	0.0204	Correlation Location 2
10/26/2016 10:11	0.0204	Correlation Location 2
10/26/2016 10:11	0.0204	Correlation Location 2
10/26/2016 10:11	0.0201	Correlation Location 2
10/26/2016 10:11	0.0205	Correlation Location 2
10/26/2016 10:11	0.021	Correlation Location 2
10/26/2016 10:11	0.0211	Correlation Location 2
10/26/2016 10:11	0.0211	Correlation Location 2
10/26/2016 10:11	0.0211	Correlation Location 2
10/26/2016 10:11	0.0211	Correlation Location 2
10/26/2016 10:12	0.021	Correlation Location 2
10/26/2016 10:12	0.0207	Correlation Location 2
10/26/2016 10:12	0.021	Correlation Location 2
10/26/2016 10:12	0.0213	Correlation Location 2
10/26/2016 10:12	0.0211	Correlation Location 2
10/26/2016 10:12	0.0211	Correlation Location 2
10/26/2016 10:12	0.021	Correlation Location 2
10/26/2016 10:12	0.0207	Correlation Location 2
10/26/2016 10:12	0.0207	Correlation Location 2
10/26/2016 10:12	0.021	Correlation Location 2
10/26/2016 10:13	0.0211	Correlation Location 2
10/26/2016 10:13	0.0207	Correlation Location 2
10/26/2016 10:13	0.0207	Correlation Location 2
10/26/2016 10:13	0.0207	Correlation Location 2
10/26/2016 10:13	0.0208	Correlation Location 2
10/26/2016 10:13	0.0204	Correlation Location 2

Date and Time	Exposure Rate (mR/h)	Location
10/26/2016 10:13	0.0205	Correlation Location 2
10/26/2016 10:13	0.0209	Correlation Location 2
10/26/2016 10:13	0.021	Correlation Location 2
10/26/2016 10:13	0.0211	Correlation Location 2
10/26/2016 10:14	0.0215	Correlation Location 2
10/26/2016 10:14	0.0213	Correlation Location 2
10/26/2016 10:14	0.0213	Correlation Location 2
10/26/2016 10:14	0.021	Correlation Location 2
10/26/2016 10:14	0.0205	Correlation Location 2
10/26/2016 10:14	0.0206	Correlation Location 2
10/26/2016 10:14	0.0208	Correlation Location 2
10/26/2016 10:14	0.0211	Correlation Location 2
10/26/2016 10:14	0.0217	Correlation Location 2
10/26/2016 10:14	0.0217	Correlation Location 2
10/26/2016 10:15	0.0218	Correlation Location 2
10/26/2016 10:15	0.0213	Correlation Location 2
10/26/2016 10:15	0.0211	Correlation Location 2
10/26/2016 10:15	0.0213	Correlation Location 2
10/26/2016 10:15	0.0213	Correlation Location 2
10/26/2016 10:15	0.0217	Correlation Location 2
10/26/2016 10:15	0.022	Correlation Location 2
10/26/2016 10:15	0.0221	Correlation Location 2
10/26/2016 10:15	0.0221	Correlation Location 2
10/26/2016 10:15	0.0216	Correlation Location 2
10/26/2016 10:16	0.0217	Correlation Location 2
10/26/2016 10:16	0.0213	Correlation Location 2
10/26/2016 10:16	0.0209	Correlation Location 2
10/26/2016 10:16	0.0208	Correlation Location 2
10/26/2016 10:16	0.0206	Correlation Location 2
10/26/2016 10:16	0.0205	Correlation Location 2
10/26/2016 10:16	0.0208	Correlation Location 2
10/26/2016 10:16	0.0208	Correlation Location 2
10/26/2016 10:16	0.0206	Correlation Location 2
10/26/2016 10:16	0.0207	Correlation Location 2
10/26/2016 10:17	0.0211	Correlation Location 2
10/26/2016 10:17	0.0211	Correlation Location 2
10/26/2016 10:17	0.0211	Correlation Location 2
10/26/2016 10:17	0.0213	Correlation Location 2
10/26/2016 10:17	0.0213	Correlation Location 2
10/26/2016 10:17	0.0213	Correlation Location 2
10/26/2016 10:17	0.0213	Correlation Location 2
10/26/2016 10:37	0.0548	Correlation Location 3
10/26/2016 10:37	0.0965	Correlation Location 3
10/26/2016 10:37	0.0854	Correlation Location 3
10/26/2016 10:38	0.0601	Correlation Location 3
10/26/2016 10:38	0.0413	Correlation Location 3
10/26/2016 10:38	0.0298	Correlation Location 3
10/26/2016 10:38	0.0233	Correlation Location 3
10/26/2016 10:38	0.02	Correlation Location 3
10/26/2016 10:38	0.0185	Correlation Location 3
10/26/2016 10:38	0.0177	Correlation Location 3
10/26/2016 10:38	0.0176	Correlation Location 3
10/26/2016 10:38	0.0172	Correlation Location 3
10/26/2016 10:38	0.017	Correlation Location 3
10/26/2016 10:39	0.017	Correlation Location 3
10/26/2016 10:39	0.0173	Correlation Location 3
10/26/2016 10:39	0.0169	Correlation Location 3
10/26/2016 10:39	0.0168	Correlation Location 3
10/26/2016 10:39	0.017	Correlation Location 3
10/26/2016 10:39	0.0176	Correlation Location 3
10/26/2016 10:39	0.0174	Correlation Location 3
10/26/2016 10:39	0.0172	Correlation Location 3
10/26/2016 10:39	0.017	Correlation Location 3
10/26/2016 10:39	0.0172	Correlation Location 3
10/26/2016 10:40	0.0173	Correlation Location 3
10/26/2016 10:40	0.0172	Correlation Location 3
10/26/2016 10:40	0.0173	Correlation Location 3
10/26/2016 10:40	0.0174	Correlation Location 3
10/26/2016 10:40	0.0176	Correlation Location 3
10/26/2016 10:40	0.0173	Correlation Location 3
10/26/2016 10:40	0.017	Correlation Location 3
10/26/2016 10:40	0.0173	Correlation Location 3
10/26/2016 10:40	0.0174	Correlation Location 3
10/26/2016 10:40	0.017	Correlation Location 3
10/26/2016 10:41	0.017	Correlation Location 3
10/26/2016 10:41	0.0172	Correlation Location 3
10/26/2016 10:41	0.0174	Correlation Location 3
10/26/2016 10:41	0.0178	Correlation Location 3
10/26/2016 10:41	0.0178	Correlation Location 3
10/26/2016 10:41	0.0175	Correlation Location 3
10/26/2016 10:41	0.0176	Correlation Location 3
10/26/2016 10:41	0.0178	Correlation Location 3
10/26/2016 10:41	0.0175	Correlation Location 3
10/26/2016 10:41	0.0173	Correlation Location 3
10/26/2016 10:42	0.0173	Correlation Location 3
10/26/2016 10:42	0.0174	Correlation Location 3
10/26/2016 10:42	0.0172	Correlation Location 3
10/26/2016 10:42	0.017	Correlation Location 3
10/26/2016 10:42	0.0172	Correlation Location 3
10/26/2016 10:42	0.017	Correlation Location 3

Date and Time	Exposure Rate (mR/h)	Location
10/26/2016 10:42	0.017	Correlation Location 3
10/26/2016 10:42	0.0173	Correlation Location 3
10/26/2016 10:42	0.0175	Correlation Location 3
10/26/2016 10:42	0.0176	Correlation Location 3
10/26/2016 10:43	0.0174	Correlation Location 3
10/26/2016 10:43	0.017	Correlation Location 3
10/26/2016 10:43	0.017	Correlation Location 3
10/26/2016 10:43	0.0174	Correlation Location 3
10/26/2016 10:43	0.0175	Correlation Location 3
10/26/2016 10:43	0.0173	Correlation Location 3
10/26/2016 10:43	0.017	Correlation Location 3
10/26/2016 10:43	0.0169	Correlation Location 3
10/26/2016 10:43	0.0176	Correlation Location 3
10/26/2016 10:43	0.0177	Correlation Location 3
10/26/2016 10:44	0.0177	Correlation Location 3
10/26/2016 10:44	0.0179	Correlation Location 3
10/26/2016 10:44	0.018	Correlation Location 3
10/26/2016 10:44	0.0177	Correlation Location 3
10/26/2016 10:44	0.0175	Correlation Location 3
10/26/2016 10:44	0.0174	Correlation Location 3
10/26/2016 10:44	0.0175	Correlation Location 3
10/26/2016 10:44	0.0173	Correlation Location 3
10/26/2016 10:44	0.0173	Correlation Location 3
10/26/2016 10:44	0.0172	Correlation Location 3
10/26/2016 10:45	0.0175	Correlation Location 3
10/26/2016 10:45	0.018	Correlation Location 3
10/26/2016 10:45	0.0179	Correlation Location 3
10/26/2016 10:45	0.0175	Correlation Location 3
10/26/2016 10:45	0.0174	Correlation Location 3
10/26/2016 10:45	0.0172	Correlation Location 3
10/26/2016 10:45	0.017	Correlation Location 3
10/26/2016 10:45	0.0168	Correlation Location 3
10/26/2016 10:45	0.0168	Correlation Location 3
10/26/2016 10:45	0.0169	Correlation Location 3
10/26/2016 10:46	0.0169	Correlation Location 3
10/26/2016 10:46	0.0174	Correlation Location 3
10/26/2016 10:46	0.0178	Correlation Location 3
10/26/2016 10:46	0.0176	Correlation Location 3
10/26/2016 10:46	0.0177	Correlation Location 3
10/26/2016 10:46	0.0178	Correlation Location 3
10/26/2016 10:46	0.0174	Correlation Location 3
10/26/2016 10:46	0.0173	Correlation Location 3
10/26/2016 10:46	0.0173	Correlation Location 3
10/26/2016 10:46	0.0173	Correlation Location 3
10/26/2016 10:47	0.0177	Correlation Location 3
10/26/2016 10:47	0.018	Correlation Location 3
10/26/2016 10:47	0.018	Correlation Location 3
10/26/2016 10:47	0.0178	Correlation Location 3
10/26/2016 10:47	0.0175	Correlation Location 3
10/26/2016 10:47	0.017	Correlation Location 3
10/26/2016 10:47	0.0169	Correlation Location 3
10/26/2016 10:47	0.0173	Correlation Location 3
10/26/2016 10:47	0.0173	Correlation Location 3
10/26/2016 10:47	0.017	Correlation Location 3
10/26/2016 10:48	0.0173	Correlation Location 3
10/26/2016 10:48	0.0177	Correlation Location 3
10/26/2016 10:48	0.0173	Correlation Location 3
10/26/2016 10:48	0.0172	Correlation Location 3
10/26/2016 10:48	0.0173	Correlation Location 3
10/26/2016 11:13	0.054	Correlation Location 4
10/26/2016 11:13	0.0944	Correlation Location 4
10/26/2016 11:13	0.0823	Correlation Location 4
10/26/2016 11:13	0.0568	Correlation Location 4
10/26/2016 11:14	0.0378	Correlation Location 4
10/26/2016 11:14	0.0263	Correlation Location 4
10/26/2016 11:14	0.0201	Correlation Location 4
10/26/2016 11:14	0.017	Correlation Location 4
10/26/2016 11:14	0.0149	Correlation Location 4
10/26/2016 11:14	0.0136	Correlation Location 4
10/26/2016 11:14	0.013	Correlation Location 4
10/26/2016 11:14	0.0129	Correlation Location 4
10/26/2016 11:14	0.0128	Correlation Location 4
10/26/2016 11:14	0.0127	Correlation Location 4
10/26/2016 11:15	0.0129	Correlation Location 4
10/26/2016 11:15	0.0133	Correlation Location 4
10/26/2016 11:15	0.0132	Correlation Location 4
10/26/2016 11:15	0.0128	Correlation Location 4
10/26/2016 11:15	0.0129	Correlation Location 4
10/26/2016 11:15	0.013	Correlation Location 4
10/26/2016 11:15	0.0128	Correlation Location 4
10/26/2016 11:15	0.0127	Correlation Location 4
10/26/2016 11:15	0.0123	Correlation Location 4
10/26/2016 11:15	0.0123	Correlation Location 4
10/26/2016 11:16	0.0124	Correlation Location 4
10/26/2016 11:16	0.0123	Correlation Location 4
10/26/2016 11:16	0.0122	Correlation Location 4
10/26/2016 11:16	0.0124	Correlation Location 4
10/26/2016 11:16	0.0126	Correlation Location 4
10/26/2016 11:16	0.0123	Correlation Location 4
10/26/2016 11:16	0.0123	Correlation Location 4

Date and Time	Exposure Rate (mR/h)	Location
10/26/2016 11:16	0.0126	Correlation Location 4
10/26/2016 11:16	0.0127	Correlation Location 4
10/26/2016 11:16	0.0128	Correlation Location 4
10/26/2016 11:17	0.0127	Correlation Location 4
10/26/2016 11:17	0.0129	Correlation Location 4
10/26/2016 11:17	0.0127	Correlation Location 4
10/26/2016 11:17	0.0127	Correlation Location 4
10/26/2016 11:17	0.0123	Correlation Location 4
10/26/2016 11:17	0.0122	Correlation Location 4
10/26/2016 11:17	0.0123	Correlation Location 4
10/26/2016 11:17	0.0131	Correlation Location 4
10/26/2016 11:17	0.0134	Correlation Location 4
10/26/2016 11:17	0.0132	Correlation Location 4
10/26/2016 11:18	0.0131	Correlation Location 4
10/26/2016 11:18	0.013	Correlation Location 4
10/26/2016 11:18	0.0127	Correlation Location 4
10/26/2016 11:18	0.0127	Correlation Location 4
10/26/2016 11:18	0.013	Correlation Location 4
10/26/2016 11:18	0.0135	Correlation Location 4
10/26/2016 11:18	0.0134	Correlation Location 4
10/26/2016 11:18	0.0132	Correlation Location 4
10/26/2016 11:18	0.0133	Correlation Location 4
10/26/2016 11:18	0.0133	Correlation Location 4
10/26/2016 11:19	0.0131	Correlation Location 4
10/26/2016 11:19	0.0129	Correlation Location 4
10/26/2016 11:19	0.0128	Correlation Location 4
10/26/2016 11:19	0.0127	Correlation Location 4
10/26/2016 11:19	0.0126	Correlation Location 4
10/26/2016 11:19	0.0126	Correlation Location 4
10/26/2016 11:19	0.0124	Correlation Location 4
10/26/2016 11:19	0.0124	Correlation Location 4
10/26/2016 11:19	0.0122	Correlation Location 4
10/26/2016 11:19	0.0122	Correlation Location 4
10/26/2016 11:20	0.0122	Correlation Location 4
10/26/2016 11:20	0.0122	Correlation Location 4
10/26/2016 11:20	0.0124	Correlation Location 4
10/26/2016 11:20	0.0124	Correlation Location 4
10/26/2016 11:20	0.0124	Correlation Location 4
10/26/2016 11:20	0.0126	Correlation Location 4
10/26/2016 11:20	0.0124	Correlation Location 4
10/26/2016 11:20	0.0124	Correlation Location 4
10/26/2016 11:20	0.0126	Correlation Location 4
10/26/2016 11:20	0.0127	Correlation Location 4
10/26/2016 11:21	0.0128	Correlation Location 4
10/26/2016 11:21	0.013	Correlation Location 4
10/26/2016 11:21	0.0129	Correlation Location 4
10/26/2016 11:21	0.0126	Correlation Location 4
10/26/2016 11:21	0.0127	Correlation Location 4
10/26/2016 11:21	0.0128	Correlation Location 4
10/26/2016 11:21	0.0128	Correlation Location 4
10/26/2016 11:21	0.0127	Correlation Location 4
10/26/2016 11:21	0.0128	Correlation Location 4
10/26/2016 11:21	0.0129	Correlation Location 4
10/26/2016 11:22	0.0129	Correlation Location 4
10/26/2016 11:22	0.0126	Correlation Location 4
10/26/2016 11:22	0.0127	Correlation Location 4
10/26/2016 11:22	0.0129	Correlation Location 4
10/26/2016 11:22	0.0128	Correlation Location 4
10/26/2016 11:22	0.0129	Correlation Location 4
10/26/2016 11:22	0.0131	Correlation Location 4
10/26/2016 11:22	0.0131	Correlation Location 4
10/26/2016 11:22	0.0132	Correlation Location 4
10/26/2016 11:22	0.0133	Correlation Location 4
10/26/2016 11:23	0.0131	Correlation Location 4
10/26/2016 11:23	0.013	Correlation Location 4
10/26/2016 11:23	0.0131	Correlation Location 4
10/26/2016 11:23	0.0128	Correlation Location 4
10/26/2016 11:23	0.0127	Correlation Location 4
10/26/2016 11:23	0.0126	Correlation Location 4
10/26/2016 11:23	0.0122	Correlation Location 4
10/26/2016 11:23	0.0122	Correlation Location 4
10/26/2016 11:23	0.0122	Correlation Location 4
10/26/2016 11:23	0.0121	Correlation Location 4
10/26/2016 11:24	0.0122	Correlation Location 4
10/26/2016 11:24	0.0122	Correlation Location 4
10/26/2016 11:24	0.0121	Correlation Location 4
10/26/2016 11:24	0.0121	Correlation Location 4
10/26/2016 11:51	0.0533	Correlation Location 5
10/26/2016 11:51	0.0929	Correlation Location 5
10/26/2016 11:51	0.0803	Correlation Location 5
10/26/2016 11:52	0.0544	Correlation Location 5
10/26/2016 11:52	0.0357	Correlation Location 5
10/26/2016 11:52	0.0239	Correlation Location 5
10/26/2016 11:52	0.0174	Correlation Location 5
10/26/2016 11:52	0.014	Correlation Location 5
10/26/2016 11:52	0.0121	Correlation Location 5
10/26/2016 11:52	0.0116	Correlation Location 5
10/26/2016 11:52	0.0115	Correlation Location 5
10/26/2016 11:52	0.0114	Correlation Location 5
10/26/2016 11:52	0.0117	Correlation Location 5

Date and Time	Exposure Rate (mR/h)	Location
10/26/2016 11:53	0.012	Correlation Location 5
10/26/2016 11:53	0.0117	Correlation Location 5
10/26/2016 11:53	0.0117	Correlation Location 5
10/26/2016 11:53	0.0122	Correlation Location 5
10/26/2016 11:53	0.0122	Correlation Location 5
10/26/2016 11:53	0.012	Correlation Location 5
10/26/2016 11:53	0.0115	Correlation Location 5
10/26/2016 11:53	0.0111	Correlation Location 5
10/26/2016 11:53	0.011	Correlation Location 5
10/26/2016 11:53	0.0111	Correlation Location 5
10/26/2016 11:54	0.0112	Correlation Location 5
10/26/2016 11:54	0.011	Correlation Location 5
10/26/2016 11:54	0.0105	Correlation Location 5
10/26/2016 11:54	0.0102	Correlation Location 5
10/26/2016 11:54	0.01	Correlation Location 5
10/26/2016 11:54	0.0104	Correlation Location 5
10/26/2016 11:54	0.0108	Correlation Location 5
10/26/2016 11:54	0.0111	Correlation Location 5
10/26/2016 11:54	0.0112	Correlation Location 5
10/26/2016 11:54	0.0111	Correlation Location 5
10/26/2016 11:55	0.0111	Correlation Location 5
10/26/2016 11:55	0.0111	Correlation Location 5
10/26/2016 11:55	0.0108	Correlation Location 5
10/26/2016 11:55	0.0106	Correlation Location 5
10/26/2016 11:55	0.0108	Correlation Location 5
10/26/2016 11:55	0.0108	Correlation Location 5
10/26/2016 11:55	0.0105	Correlation Location 5
10/26/2016 11:55	0.0104	Correlation Location 5
10/26/2016 11:55	0.0105	Correlation Location 5
10/26/2016 11:55	0.0109	Correlation Location 5
10/26/2016 11:56	0.0111	Correlation Location 5
10/26/2016 11:56	0.0112	Correlation Location 5
10/26/2016 11:56	0.0111	Correlation Location 5
10/26/2016 11:56	0.0112	Correlation Location 5
10/26/2016 11:56	0.0111	Correlation Location 5
10/26/2016 11:56	0.0108	Correlation Location 5
10/26/2016 11:56	0.0108	Correlation Location 5
10/26/2016 11:56	0.0108	Correlation Location 5
10/26/2016 11:56	0.0109	Correlation Location 5
10/26/2016 11:56	0.0108	Correlation Location 5
10/26/2016 11:57	0.011	Correlation Location 5
10/26/2016 11:57	0.011	Correlation Location 5
10/26/2016 11:57	0.011	Correlation Location 5
10/26/2016 11:57	0.0111	Correlation Location 5
10/26/2016 11:57	0.0114	Correlation Location 5
10/26/2016 11:57	0.0116	Correlation Location 5
10/26/2016 11:57	0.0114	Correlation Location 5
10/26/2016 11:57	0.011	Correlation Location 5
10/26/2016 11:57	0.0108	Correlation Location 5
10/26/2016 11:57	0.0106	Correlation Location 5
10/26/2016 11:58	0.0108	Correlation Location 5
10/26/2016 11:58	0.0109	Correlation Location 5
10/26/2016 11:58	0.011	Correlation Location 5
10/26/2016 11:58	0.011	Correlation Location 5
10/26/2016 11:58	0.0109	Correlation Location 5
10/26/2016 11:58	0.0106	Correlation Location 5
10/26/2016 11:58	0.0109	Correlation Location 5
10/26/2016 11:58	0.011	Correlation Location 5
10/26/2016 11:58	0.0106	Correlation Location 5
10/26/2016 11:58	0.0105	Correlation Location 5
10/26/2016 11:59	0.0111	Correlation Location 5
10/26/2016 11:59	0.0114	Correlation Location 5
10/26/2016 11:59	0.011	Correlation Location 5
10/26/2016 11:59	0.0108	Correlation Location 5
10/26/2016 11:59	0.011	Correlation Location 5
10/26/2016 11:59	0.0111	Correlation Location 5
10/26/2016 11:59	0.0112	Correlation Location 5
10/26/2016 11:59	0.0114	Correlation Location 5
10/26/2016 11:59	0.0112	Correlation Location 5
10/26/2016 11:59	0.011	Correlation Location 5
10/26/2016 12:00	0.0109	Correlation Location 5
10/26/2016 12:00	0.0108	Correlation Location 5
10/26/2016 12:00	0.0105	Correlation Location 5
10/26/2016 12:00	0.0109	Correlation Location 5
10/26/2016 12:00	0.0108	Correlation Location 5
10/26/2016 12:00	0.011	Correlation Location 5
10/26/2016 12:00	0.0111	Correlation Location 5
10/26/2016 12:00	0.011	Correlation Location 5
10/26/2016 12:00	0.0108	Correlation Location 5
10/26/2016 12:00	0.0109	Correlation Location 5
10/26/2016 12:01	0.0109	Correlation Location 5
10/26/2016 12:01	0.0109	Correlation Location 5
10/26/2016 12:01	0.011	Correlation Location 5
10/26/2016 12:01	0.0112	Correlation Location 5
10/26/2016 12:01	0.0114	Correlation Location 5
10/26/2016 12:01	0.0112	Correlation Location 5
10/26/2016 12:01	0.0111	Correlation Location 5
10/26/2016 12:01	0.0109	Correlation Location 5
10/26/2016 12:01	0.0108	Correlation Location 5
10/26/2016 12:01	0.011	Correlation Location 5

Date and Time	Exposure Rate (mR/h)	Location
10/26/2016 12:02	0.0109	Correlation Location 5
10/26/2016 12:02	0.0109	Correlation Location 5
10/26/2016 12:02	0.0112	Correlation Location 5
10/26/2016 12:02	0.0112	Correlation Location 5
10/26/2016 12:02	0.0108	Correlation Location 5
10/26/2016 12:02	0.0105	Correlation Location 5

Appendix C Technical Memorandum from ERG to Stantec: “Statistical Analysis of the Navajo Trustee Mines Dataset: Multivariate Linear Regression for Evaluation of Gamma Correlation with Ra-226 and Evaluation of Secular Equilibrium Between Ra-226 and Th-230”.

Environmental Restoration Group, Inc.
8809 Washington St NE, Suite 150
Albuquerque, NM 87113

ph: (505) 298-4224
fax: (505) 797-1404
www.ERGoffice.com

Memo

To: Kirsty Woods, Program Director, Stantec

From: Liz Ruedig, PhD, CHP, and Mike Schierman, CHP, Environmental Restoration Group

Date: 7/31/2018

Re: Statistical Analysis of the Navajo Trustee Mines Dataset: Multivariate Linear Regression for Evaluation of Gamma Correlation with Ra-226 and Evaluation of Secular Equilibrium Between Ra-226 and Th-230

Multivariate Linear Regression for Evaluation of Gamma Count Rate with Ra-226 Concentrations in Surface Soil

Due to a large number of reviewer comments at the sixteen Navajo Trust Abandoned Uranium Mines (AUMs) concerning the influence of gamma-emitting radionuclides not within the uranium-238 decay series on the correlation between dynamic gamma count rate and soil concentration of radium-226, Environmental Restoration Group has performed multivariate linear regression (MLR), relating gamma count rate to multiple soil radionuclides simultaneously. MLR models the influence of a set of predictor variables (in this case, soil concentrations of several gamma-emitting radionuclides, or surrogates for these radionuclides) on a single response variable (in this case, dynamic gamma count rate), accounting for the influence of each predictor variable upon the response variable independently of the other predictor variables within the set.

In a MLR, it is possible to distinguish from a large set of variables the subset that significantly predicts a response variable. This is done by evaluating potential models on a number of criteria:

1. **The multi-collinearity of predictor variables.**

   Predictor variables that are linearly related to each other (i.e., variables y and x, where y may also be mathematically expressed as some multiple of x) produce a condition known as multicollinearity, where the matrix math used to solve the multivariate linear regression becomes irreducible. A physical example of multicollinearity occurs when modelling the influence of two radionuclides in equilibrium with each other (e.g., Th-230 and Ra-226) on a single response variable (e.g., gamma count rate). In order to compute a mathematical solution to the regression model, one of the multicollinear variables must be removed from the regression matrix. The multicollinear variables are identifiable by a large variance inflation factor (VIF), typically greater than 7, but in cases of near-perfect multicollinearity, often much greater than this value (e.g., > 100).

   It is also possible to identify multicollinear predictor variables by regressing two suspect variables upon each other. A high degree of correlation (i.e., $p < 0.05$ and high adjusted R^2) between the two variables suggests that the predictor variables are multicollinear, and that one variable should be eliminated from the multivariate regression prior to analysis.

2. **The p-value of predictor variables**

   For a variable to be considered a significant predictor of the response variable, the p-value of its slope (as calculated in an ANOVA table) must be significant (i.e., $p < 0.05$). In a MLR, the adjusted R^2 value for individual predictor variables is not indicative of overall model quality.

For the Navajo Trust AUMs there are three potential gamma-contributing radionuclides (defined as radionuclides that emit gamma radiation, or whose short-lived decay products emit gamma radiation) present in soil: thorium-232, radium-226 and, thorium-228. Thorium-230, which does not emit gamma radiation, was excluded as a potentially significant gamma-contributing radionuclide.

A MLR model: gamma = radium-226 + thorium-228 + thorium-232 was run for each AUM. For 15 of the 16 mines, thorium-232 and thorium-228 were multicollinear. On this basis, thorium-228 was excluded from the MLR. No multicollinearity was detected at Barton 3. However, none of the predictor variables was a significant predictor of gamma count rate ($p > 0.05$) for the complete model. As such, analysis for all 16 AUMs proceeded by removing thorium-228 from the set of predictor variables and running a new MLR model: gamma = radium-226 + thorium-232. None of the 16 models exhibited multicollinearity with the reduced model. After accounting for the effect of radium-226, thorium-232 was not a significant predictor of gamma count rate at any of the 16 AUMs. Radium-226 was a significant predictor ($p < 0.05$) of gamma count rate (after accounting for the influence of thorium-232 and thorium-228) at some of the AUMs (six of 16 AUMs).

Since neither predictor variable (thorium-232 or radium-226) was unambiguously a predictor in the MLR, two univariate regression models were performed as a final step: gamma = radium-226 and gamma = thorium-232. Thorium-232 was a significant predictor of gamma count rate ($p < 0.05$) only at Standing Rock, which is not unexpected given the geological conditions at this AUM. At all other sites, thorium-232 (and thorium-228 by association) were not significant predictors of gamma count rate ($p > 0.05$). By way of contrast, radium-226 was a significant predictor of the gamma count rate ($p < 0.05$) at 13 of the 16 AUMs. At three AUMs (Mitten, NA-0928, and Tsosie 1) none of the measured radionuclides significantly predicted the gamma count rate. Additionally, the adjusted R^2 values for the correlation models at the three AUMs, plus Claim 28, fail to meet the specified data quality objective (DQO) of greater than 0.8.

The failure to construct statistically defensible correlation models at four AUMs has been identified as a data gap in the relevant AUM report. The unsatisfactory correlation result at these locations is likely due to the small number of correlation locations, or environmental conditions at the AUMs (e.g., spatial heterogeneity in radionuclide concentration in soil, topographic features influencing gamma count rate, etc.), or some combination thereof.

Note that while the statistical measures (i.e., conformance with the study DQO of $R^2 > 0.8$) associated with these regressions can be improved by fitting a power curve to the data, and reporting unadjusted R^2 values, with only five data points at each AUM, ERG does not believe that any statistical correlation model is sufficiently robust to make meaningful inferences concerning soil radium-226 concentration from the gamma scanning data. ERG believes that linear functions – not power curves – best mimic the conceptual model for the physical processes governing the observed data. Fitting any other function in an effort to achieve the study DQO for R^2 is not a statistically rigorous approach, and improving R^2 does not commensurately improve a statistical model's predictive ability. Figure *1* compares the result of fitting a linear versus a power function to the available correlation data for one AUM (Hoskie Tso); the other AUM results are similar.

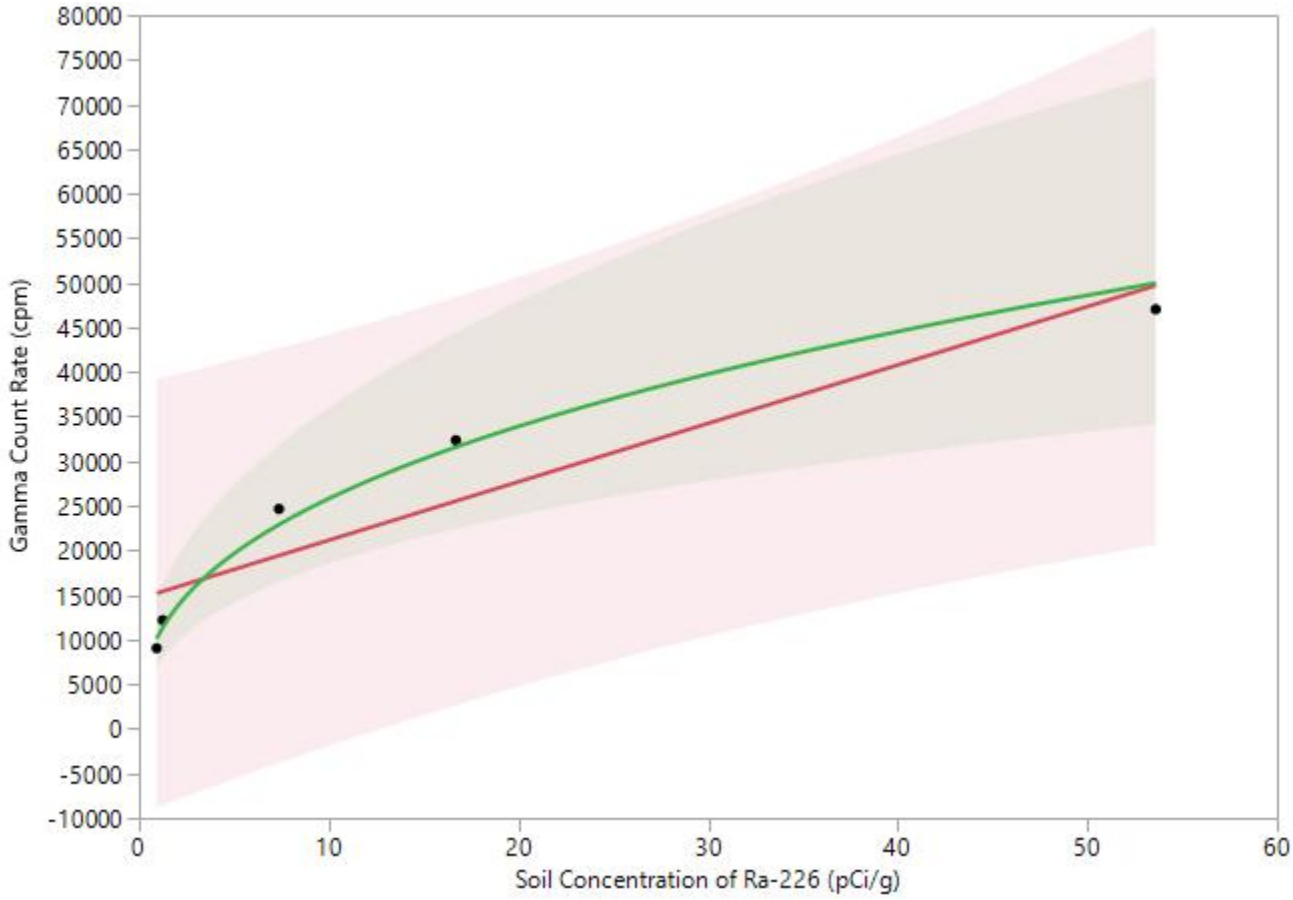

Figure 1. Regression models (linear versus power curve) for gamma count rate regressed on radium-226 showing 95% UPLs (upper prediction limits). Both models meet the study DQO for adjusted R^2 (greater than 0.8). Gamma count rate is not an especially strong predictor of soil concentration of radium-226 for either function.

ERG has updated the individual AUM reports with linear correlation functions and reported the more robust measures of statistical performance described in this memo.

Evaluation of Secular Equilibrium Between Ra-226 and Th-230

Secular equilibrium is a condition that occurs when the half-life of a decay-product nuclide is significantly shorter than that of its parent nuclide. After a period of ingrowth equal to approximately seven times the half-life of the decay product, the two nuclides effectively decay with the half-life of the parent. When two radionuclides are in secular equilibrium, their activities are equal.

Equilibrium, for the purpose of this report, is defined as a condition whereby a parent nuclide and its decay product are present in the environment at a fixed ratio, but this ratio – for whatever reason – is not a one-to-one relationship indicative of secular equilibrium. Most commonly, an equilibrium condition results from an environmental process which chemically selects for and

transports one nuclide (parent or decay product) away from the other nuclide. Because a consistent fraction of one nuclide has been removed, the two nuclides are present at a fixed ratio other than one-to-one.

Determination of secular equilibrium for an AUM can be an important part of the risk assessment process, as the assumed fraction of radium-226 decay products present in the environment greatly influences a hypothetical receptor's radiation dose and mortality risk. However, it is also acceptable and conservative to assume secular equilibrium between radium-226 and its decay products for the purpose of risk assessment, and therefore to avoid the need to conclusively determine the secular equilibrium status of an AUM. Thus, an inconclusive result regarding secular equilibrium is not a study data gap, as the risk assessment phase may still proceed, provided that conservative assumptions are included regarding equilibrium concentrations of radium-226 decay products.

Regardless, the Navajo Nation AUM Environmental Response Trust RSE workplan specified that an evaluation of secular equilibrium would be made at each of the 16 Trust AUMs, and so a robust statistical examination of secular equilibrium status for radium-226 and its decay products at each AUM was conducted. One method of evaluating equilibrium between Ra-226 and Th-230 is to calculate the ratio (φ) between the two nuclides for each soil sample location, i.e.,

$$\varphi = \frac{\left[^{226}Ra\right]}{\left[^{230}Th\right]}$$

When φ is unity, the two nuclides may be said to be in secular equilibrium. Sometimes, φ is averaged over a number of locations, and if the average is unity, the population of measurement locations is said to be in secular equilibrium. Similarly, if φ is consistently some number other than one, it may be concluded that the measured population is in equilibrium. This approach does not account for the statistical uncertainty associated with making inferences across a population, nor the bias introduced into the measurement by averaging a potentially large number of ratios. It is also difficult to establish defensible cutoffs for whether Ra-226 and Th-230 are in secular equilibrium at a particular site using a ratio approach, as there is no objective basis for concluding, e.g., that φ must be between 0.8 and 1.2 (versus any other range of values for φ) for secular equilibrium to occur.

Due to a large number of reviewer comments concerning secular equilibrium within the RSE reports, Environmental Restoration Group opted to re-evaluate equilibrium at each mine site using a more robust statistical method: simple linear regression. This was done after confirming the methods to analyze Ra-226 (EPA Method 901.1) and Th-230 (alpha spectroscopy following sample digestion with hydrofluoric acid) are both total-activity methods with comparable results (L. Steere, ALS personal email communication, July 25, 2018). Evaluation of secular equilibrium for each mine site proceeded as follows:

1. Construction of a figure that depicts soil concentrations of Th-230 plotted against soil concentrations of Ra-226.

2. Simple linear regression is performed on the dataset; the p-value and the adjusted R^2 are recorded. The resulting linear model and the 95% UCL (upper confidence limit) bands are plotted on the figure generated in step 1.

3. The line y=x is added to the figure generated in step 2 (this line represents a perfect 1:1 ratio between Th-230 to Ra-226, indicative of secular equilibrium).

4. An examination of the model and the figure is made sequentially:

    a. If the p-value for the regression slope is insignificant (i.e., $p > 0.05$) or the adjusted R^2 does not meet the study's data quality objective (Adjusted $R^2 > 0.8$), ERG concludes that there is insufficient evidence to conclude that Ra-226 and Th-230 are in equilibrium (secular or otherwise) therefore, it is listed as inconclusive (no equilibrium). Figure *2* depicts the regression result for an AUM (Mitten) that failed to meet the p-value and adjusted R^2 criteria.

    b. If the p-value for the regression slope is significant (i.e., $p < 0.05$) and the adjusted R^2 meets the DQO (Adjusted $R^2 > 0.8$) there are two possible conditions, which are evaluated via visual examination of the figure generated in step 3.

        i. If the y=x line falls fully within the bounds of the 95% UCL bands on the regression, ERG concludes that there is evidence that Ra-226 and Th-230 are in secular equilibrium at the site. Figure *3* depicts the regression result for an AUM (Harvey Blackwater) where there is evidence that Ra-226 and Th-230 are in secular equilibrium.

        ii. If the y=x line falls partially or completely outside the bounds of the 95% UCL bands on the regression, ERG concludes that there is evidence that Ra-226 and Th-230 are in equilibrium, but not secular equilibrium at the site. Figure *4* depicts the regression result for an AUM (Alongo Mines) where there is evidence that Ra-226 and Th-230 are in equilibrium, but not secular equilibrium.

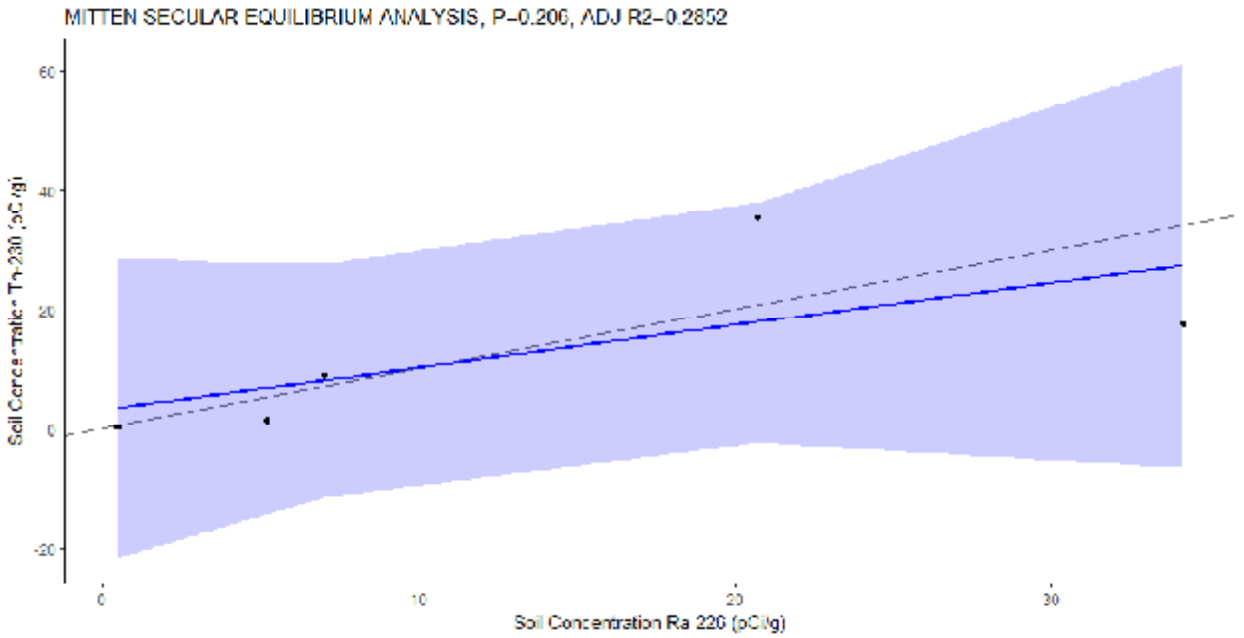

Figure 2. Result for Mitten secular equilibrium analysis, showing failure to meet p-value and adjusted R^2 criteria, i.e., the data are poorly correlated.

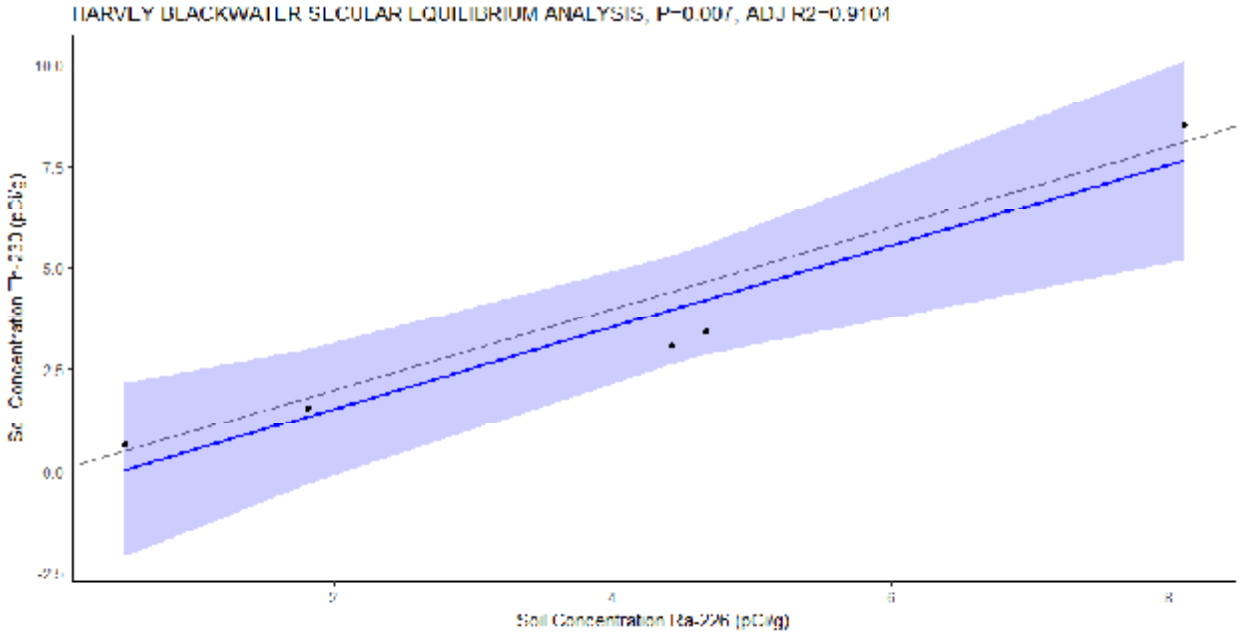

Figure 3. Result for Harvey Blackwater secular equilibrium analysis, showing excellent correlation between the data and the y=x line, i.e., Th-230 and Ra-226 are in secular equilibrium.

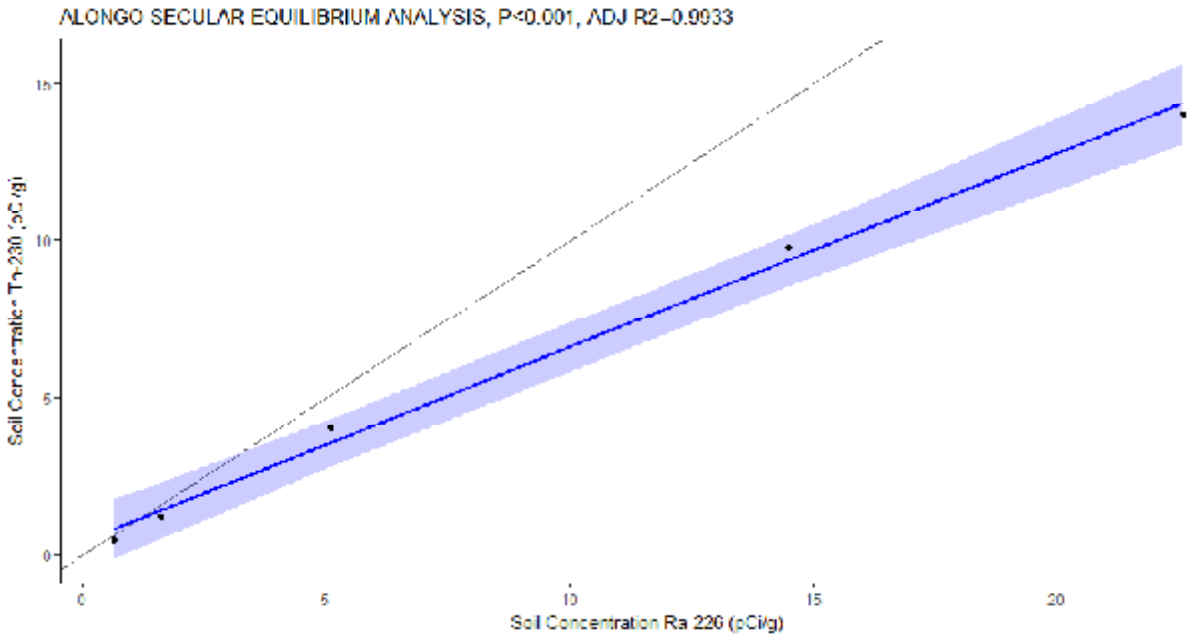

Figure 4. Result for Alongo Mines secular equilibrium analysis, showing excellent correlation between the data, but poor agreement with the y=x line, i.e., Th-230 and Ra-226 are in equilibrium, but not secular equilibrium.

ERG tested for secular equilibrium at each of the 16 Navajo AUMs using the process described above. The results are summarized in Table 1 and in the RSE report for each AUM, respectively. ERG concluded that the data provide evidence that that Ra-226 and Th-230 are in secular equilibrium in soils at two mines (Harvey Blackwater and NA-0928). At one mine (Mitten) there was insufficient evidence to draw any conclusions regarding equilibrium. At the remaining sites, there is evidence that Ra-226 and Th-230 are in equilibrium.

Table 1. Results of secular equilibrium analysis for each of the 16 Navajo Trust AUMs.

Mine	p-value	Adjusted R^2	Conclusion
Alongo Mine	<0.001	0.99	Equilibrium
Barton 3	<0.001	0.98	Equilibrium
Boyd Tisi	<0.001	0.99	Equilibrium
Charles Keith	<0.001	0.99	Equilibrium
Claim 28	<0.001	0.99	Equilibrium
Eunice Becenti	<0.001	0.99	Equilibrium
Harvey Blackwater	0.008	0.91	Secular Equilibrium
Hoskie Tso	<0.001	0.99	Equilibrium
Mitten	0.2	0.29	No Equilibrium
NA-0904	0.001	0.98	Equilibrium
NA-0928	0.002	0.97	Secular Equilibrium
Oak 124-125	<0.001	0.99	Equilibrium
Occurrence B	<0.001	0.98	Equilibrium
Section 26	0.002	0.96	Equilibrium
Standing Rock	0.008	0.91	Equilibrium
Tsosie 1	0.02	0.86	Equilibrium

Appendix D Preliminary Report “Radiological Characterization of the Boyd Tisi No.2 Western Abandoned Uranium Mine”

Radiological Characterization of the Boyd Tisi No.2 Western Abandoned Uranium Mine

Preliminary

October 9, 2017

prepared for:

Stantec Consulting Services Inc.

2130 Resort Drive, Suite 350
Steamboat Springs, CO 80487

prepared by:



Environmental Restoration Group, Inc.

8809 Washington St. NE
Suite 150
Albuquerque, NM 87113

Contents

Executive Summary iv
1.0 Introduction 1
2.0 GPS-Based Gamma Surveys 1
2.1 Potential Background Reference Area 3
2.2 Survey Area 5
3.0 Correlation Studies 8
3.1 Radium-226 and thorium concentrations in surface soils and gamma count rates 8
3.2 Equilibrium in the uranium series 13
3.3 Exposure rates and gamma count rates 13
4.0 Deviations to RSE Workplan 17
5.0 Conclusions 17
6.0 References 18

Tables

Table 1 Detection systems used in the GPS-Based gamma surveys

Table 2 Summary statistics for gamma count rates in the potential Background Reference Area

Table 3 Summary statistics for gamma count rates in the Survey Area

Table 4 Gamma count rates and associated concentrations of radium-226 in samples of surface soils obtained in the correlation study

Table 5 Concentrations of isotopes of thorium in samples of surface soils obtained in the correlation study

Table 6 Predicted concentrations of radium-226 in the Survey Area

Table 7 Co-located gamma count rate and exposure rate measurements

Table 8 Predicted exposure rates in the potential Background Reference Area

Table 9 Predicted exposure rates in the Survey Area

Figures

Figure 1	Location of the Boyd Tisi No.2 Western Abandoned Uranium Mine
Figure 2	Gamma count rates in the potential Background Reference Area
Figure 3	Histogram of gamma count rates in the potential Background Reference Area
Figure 4	Gamma count rates in the Survey Area
Figure 5	Histogram of gamma count rates in the Survey Area
Figure 6	Box plot of gamma count rates in the Survey Area
Figure 7	GPS-based gamma count rate measurements made for the correlation study
Figure 8	Correlation of gamma count rates and concentrations of radium-226 in surface soils
Figure 9	Predicted concentrations of radium-226 in the Survey Area
Figure 10	Correlation of gamma count rates and exposure rates
Figure 11	Predicted exposure rates in the Survey Area

Appendices

Appendix A	Instrument calibration and completed function check forms
Appendix B	Exposure Rate Measurements

Acronyms

ANSI	American National Standards Institute
AUM	abandoned uranium mine
BG3	Background Reference Area 3
bgs	below ground surface
cpm	counts per minute
EPA	U.S. Environmental Protection Agency
ERG	Environmental Restoration Group, Inc.
ft	foot
GPS	global positioning system
MDL	method detection limit
µg/kg	micrograms per kilogram
µR/h	microRoentgens per hour
pCi/g	picocuries per gram
R^2	Pearson's Correlation Coefficient
RSE	removal site evaluation
σ	standard deviation
Stantec	Stantec Consulting Services Inc.

Executive Summary

This report, addresses the radiological characterization of the Boyd Tisi No.2 Western abandoned uranium mine (AUM) located in the Cameron/Coalmine Mesa Chapter of the Navajo Nation near Cameron, Arizona. It documents part of the implementation of the Navajo Nation AUM Environmental Response Trust, First Phase, Removal Site Evaluation Work Plan (RSE Work Plan: MWH, 2016). The work was performed by Environmental Restoration Group, Inc of Albuquerque, New Mexico and Stantec Consulting Services Inc. (Stantec) in accordance with the Navajo Nation AUM Environmental Response Trust – First Phase.

This report provides 1) the results of a Global Positioning System (GPS)-based gamma radiation (gamma) survey, 2) comparisons of the gamma count rates at this AUM to exposure rates and concentrations of radium-226 in surface soils, and 3) an assessment of equilibrium in the uranium series. The field activities addressed in this report were conducted on October 24 and 26, 2016; and March 16, 2017. They included a GPS-based radiological survey of land surfaces over a Survey Area consisting of the mine claim area out to a 100-foot (ft) buffer; and roads and drainages within a 0.25-mile radius of the 100-ft buffer; and correlation studies.

The discussion of the results of soil sampling in this report is limited to concentrations of radium-226 and isotopes of thorium in samples taken from surface soils, as part of correlation studies. The objective of the analysis of thorium isotopes was to 1) assess the potential effects of thorium-232 and thorium-228 on the correlation of gamma count rates to concentrations of radium-226 in surface soils; and 2) evaluate thorium-230 and radium-226 activities to indicate the status of equilibrium in the uranium decay series. These and additional results for the continuing RSE are addressed in "Boyd Tisi No. 2 Western Removal Site Evaluation Report" (Stantec, 2017).

The findings of the RSE pertaining to these activities are:

- The horizontal extent and magnitude of mining-related materials were delineated sufficiently to support additional characterization of the subsurface.

- Elevated count rates were observed in the southwest corner of the mine claim at outcrops of bedrock and soils in an area that appeared to be a former waste pile.

- A potential Background Reference Area was established.

- The relationship between gamma count rates and concentrations of radium-226 in surface soils (0 to 0.5 ft below ground surface [bgs]) is described by a power regression model:

  Radium-226 Concentration (picocuries per gram [pCi/g]) = $2 \times 10^{-7} \times$ Gamma Count Rate (cpm)$^{1.6039}$

- The distribution of concentrations of radium-226 in surface soils predicted using this model resembles a lognormal distribution. The values in the Survey Area range from 0.4 to 18.7, with a central tendency (median) of 0.7 pCi/g.

- The relationship between gamma count rates and exposure rates is described by a linear regression model:

  Exposure Rate (microRoentgens per hour [µR/h]) = Gamma Count Rate (cpm) x $5x10^{-4}$ + 7.0

- The distribution of exposure rates predicted using this model resembles a lognormal distribution. The values in the Survey Area range from 11.2 to 53.7, with a central tendency (median) of 12.9 µR/h.

1.0 Introduction

This report, addresses the radiological characterization of the Boyd Tisi No.2 Western abandoned uranium mine (AUM) located in the Cameron/Coalmine Mesa Chapter of the Navajo Nation near Cameron, Arizona. It documents part of the implementation of the Navajo Nation AUM Environmental Response Trust, First Phase, Removal Site Evaluation Work Plan (RSE Work Plan: MWH, 2016). The work was performed by Environmental Restoration Group, Inc of Albuquerque, New Mexico and MWH, now part of Stantec Consulting Services Inc. (Stantec) in accordance with the Navajo Nation AUM Environmental Response Trust – First Phase.

The activities described here focus on the characterization of uranium series radionuclides in surface soils at the AUM. This report provides 1) the results of a Global Positioning System (GPS)-based gamma radiation (gamma) survey, 2) comparisons of gamma count rates to exposure rates and concentrations of radium-226 in surface soils, and 3) an assessment of equilibrium in the uranium decay series.

The field activities addressed in this report were conducted on October 24 and 26, 2016; and March 16, 2017 in accordance with the methods described in the RSE Work Plan. The GPS-based radiological survey of land surfaces covered an approximately 16-acre Survey Area that included the mine claim area out to a 100-foot buffer; and roads and drainages within a 0.25-mile radius of the buffer; gamma count rate and exposure rate measurements at fixed points; and gamma count rate measurements and soil sampling for radionuclides and metals in areas centered on these fixed points.

The discussion of the results of soil sampling in this report is limited to concentrations of radium-226 and isotopes of thorium in samples taken from surface soils, as part of correlation studies. The objective of the analysis of thorium isotopes was to 1) assess the potential effects of thorium-232 and thorium-228 on the correlation of gamma count rates to concentrations of radium-226 in surface soils; and 2) evaluate thorium-230 and radium-226 activities to indicate the status of equilibrium in the uranium decay series. These and additional results for the continuing RSE are addressed in "Boyd Tisi No. 2 Western Removal Site Evaluation Report" (Stantec, 2017).

Figure 1 shows the location of the AUM. Background information that is pertinent to the characterization of this AUM is presented in the "Boyd Tisi No. 2 Western Removal Site Evaluation Report" (Stantec, 2017).

2.0 GPS-Based Gamma Surveys

This section addresses the GPS-based surveys conducted in a potential Background Reference Area and the Survey Area. Table 1 lists the detection systems used in the survey, which were function-checked before and after each day of use and within calibration, in accordance with American National Standards Institute (ANSI) Standard N232A (ANSI, 1997). Appendix A presents the completed function check forms and calibration certificates for the instruments.



Figure 1. Location of the Boyd Tisi No.2 Western Abandoned Uranium Mine

Table 1. Detection systems used in the GPS-Based gamma surveys.

Survey Area	Ludlum Model 44-10	Ludlum Model 2221 Ratemeter/Scaler
Potential Background Reference Area	PR303727[a]	254772[a]
Survey Area	PR303727[a]	254772[a]
	PR295014	196086

Notes:
[a]Detection system used in the correlation studies described in Section 3.0.

2.1 Potential Background Reference Area

A potential Background Reference Area was surveyed, the location and results of which are depicted on Figure 2. BG3 in the figure is Background Reference Area 3.

Table 2 lists a summary of the gamma count rates, which in BG3 ranged from 10,829 to 15,070 counts per minute (cpm), with a mean and median of 12,727 and 12,758 cpm, respectively.

Figure 3 depicts a histogram of the gamma count rates. The red and green lines on the figure are theoretical normal and lognormal distributions, respectively. They are presented to show what could be expected if the distributions were normal or lognormal.

Table 2. Summary statistics for gamma count rates in the potential Background Reference Area.

	Gamma Count Rate (cpm)				
n	Min	Max	Mean	Median	Standard Deviation
116	10,829	15,070	12,727	12,758	865

Notes:
cpm = counts per minute

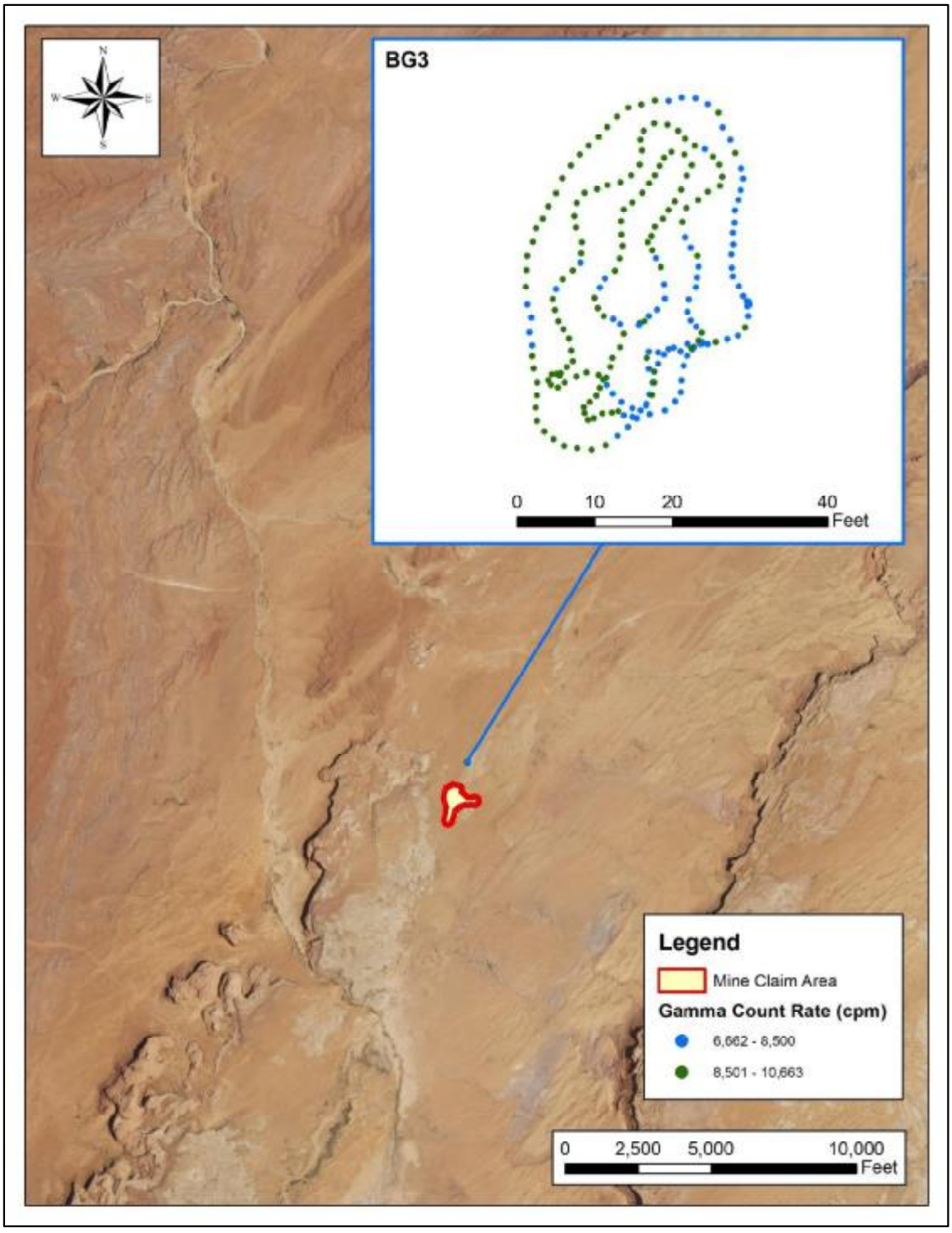

Figure 2. Gamma count rates in the potential Background Reference Area.

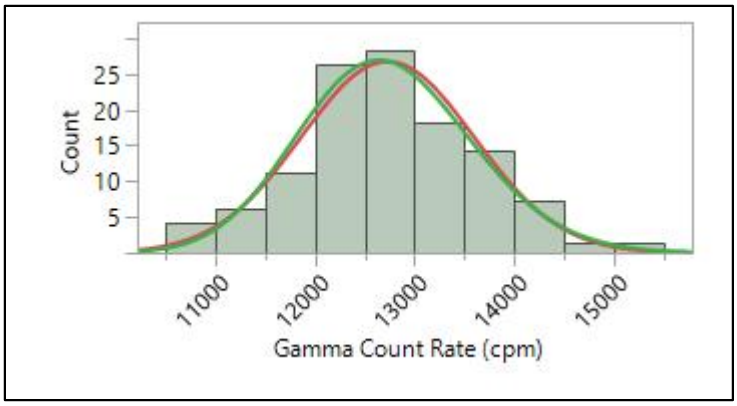

Figure 3. Histogram of gamma count rates in the potential Background Reference Area.

2.2 Survey Area

The gamma count rates observed in the Survey Area are depicted in Figure 4. The highest count rates were observed in the southwest corner of the mine claim at outcrops of bedrock and soils in an area that appeared to be a former waste pile.

Figure 5 is a histogram of the gamma count rate measurements made in the Survey Area, including the area surveyed outside the 100-ft buffer. As stated in Section 2.1, the red and green lines on the figure are theoretical normal and lognormal distributions, respectively. They are presented to show what could be expected if the distributions were normal or lognormal. The distribution of the right-tailed set of measurements, evaluated using U.S. Environmental Protection Agency software ProUCL, is not defined; i.e., neither normal or logarithmic. The box plot in Figure 6 depicts cutoffs as horizontal bars, from bottom to top, for the following values or percentiles: minimum, 0.5, 2.5, 10, 25, 50, 75, 90, 97.5, 99.5, and maximum. The 25th, 50th, and 75th percentiles --the three horizontal lines of the box inside the box plot—are 10,953, 11,717, and 12,712 cpm, respectively.

Table 3 is a statistical summary of the measurements, which range from 8,366 to 93,363 cpm and have a central tendency (median) of 11,717 cpm.

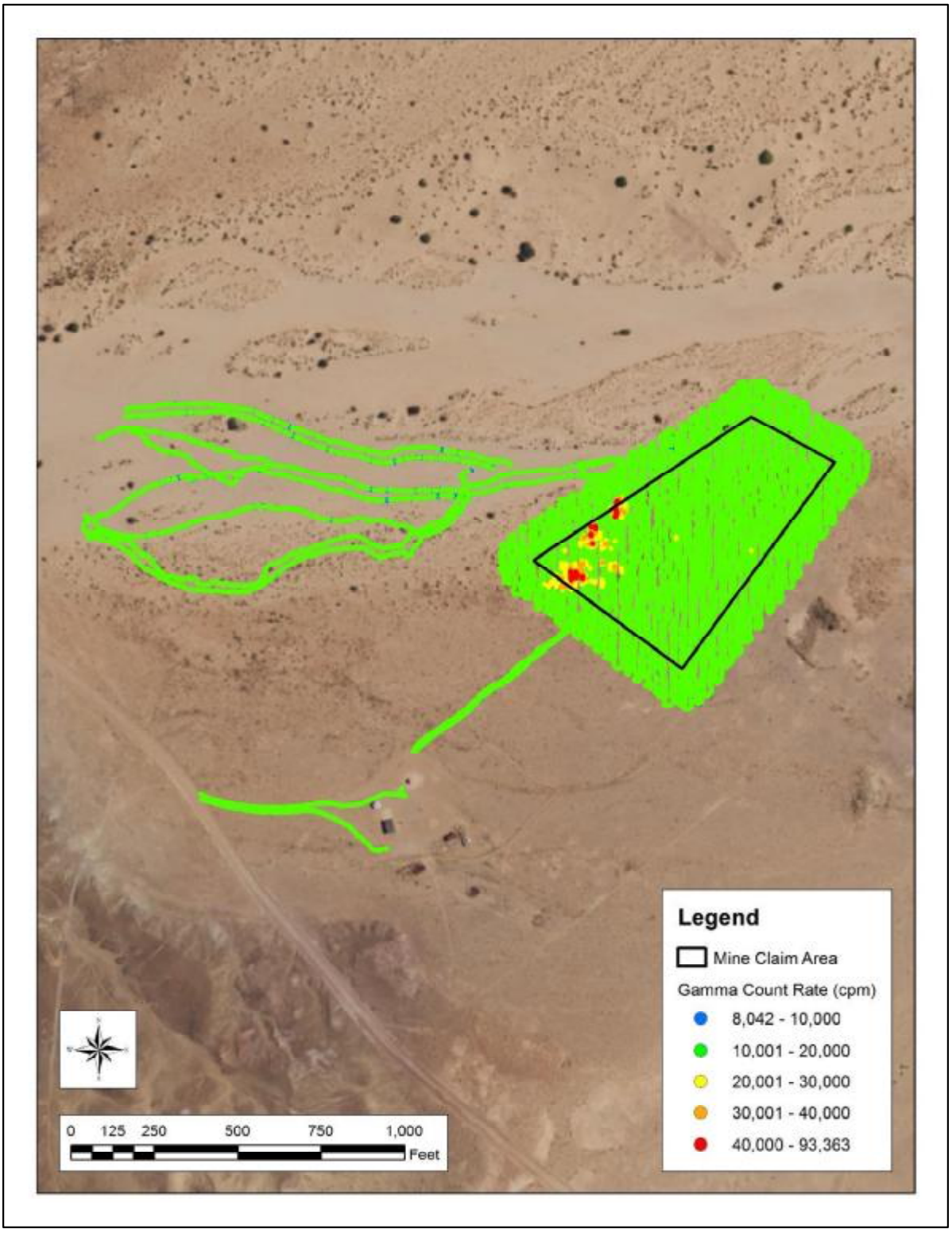

Figure 4. Gamma count rates in the Survey Area.

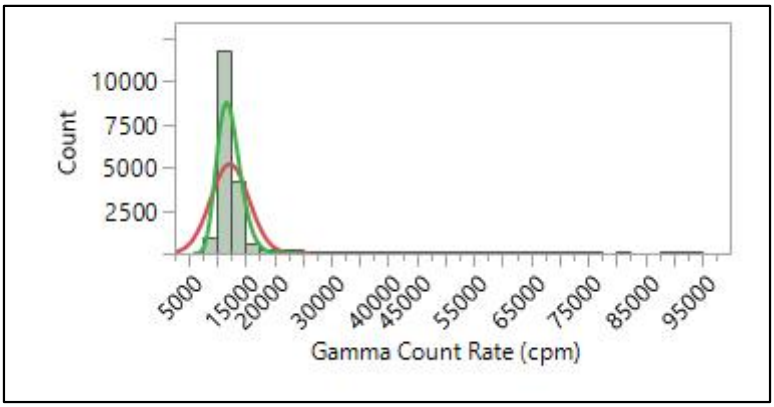

Figure 5. Histogram of gamma count rates in the Survey Area.

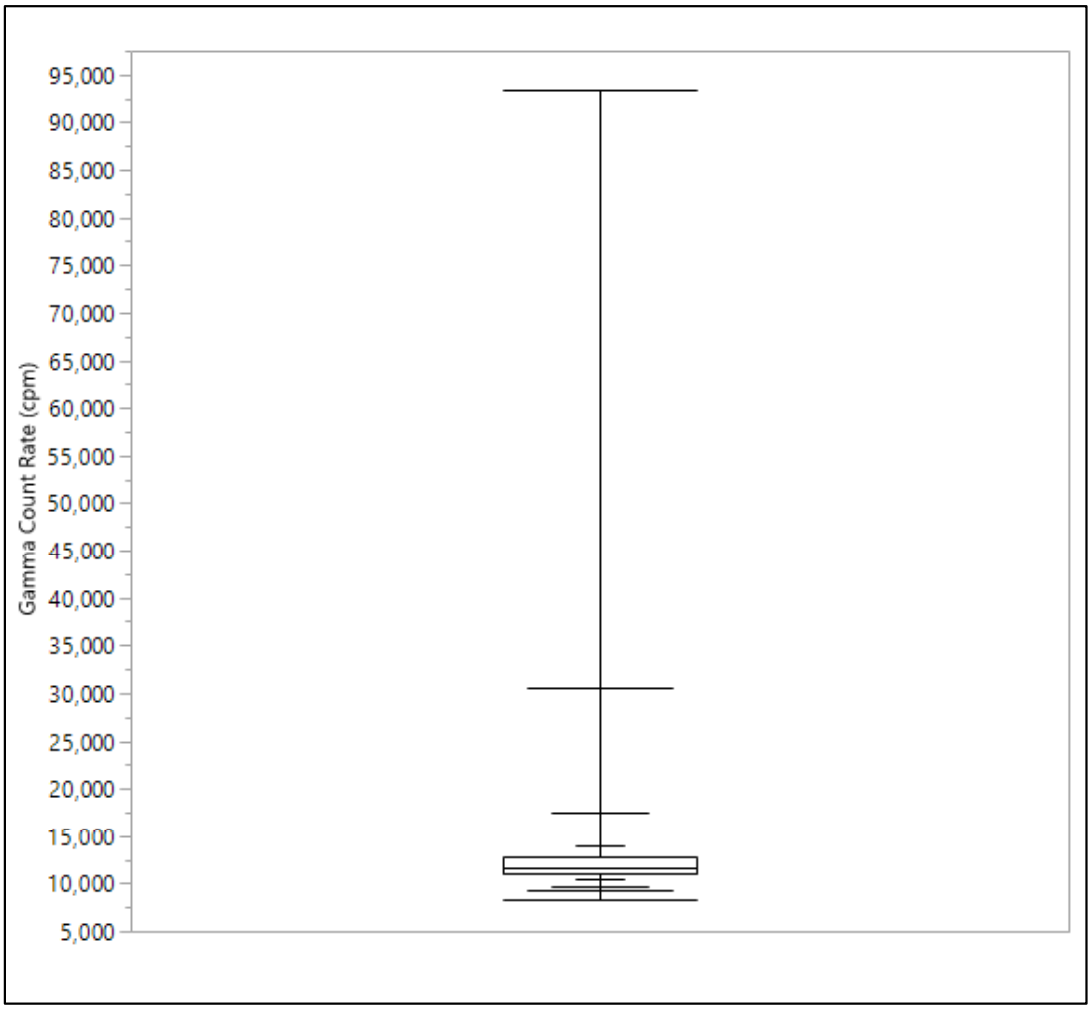

Figure 6. Box plot of gamma count rates in the Survey Area.

Table 3. Summary statistics for gamma count rates in the Survey Area.

Parameter	Gamma Count Rate (cpm)
n	17,504
Minimum	8,366
Maximum	93,363
Mean	12,250
Median	11,717
Standard Deviation	3,361

Notes:
cpm = counts per minute

3.0 Correlation Studies

The following sections address the activities under two types of correlation studies outlined in the RSE workplan: comparisons of 1) radium-226 concentrations in surface soils and gamma count rates and 2) exposure rates and gamma count rates. GPS-based gamma count rate measurements were made over small areas for the former study. The means of the measurements were used in this case. Static gamma count rate measurements, co-located with exposure rate measurements, were used in the latter study.

3.1 Radium-226 and thorium concentrations in surface soils and gamma count rates

On October 26, 2016 field personnel made GPS-based gamma count rates measurements and collected five-point composite samples of surface soils in each of five areas at the AUM. The activities were performed contemporaneously, by area and all on the same day, such that the two could be compared. Figure 7 shows the GPS-based gamma count rate measurements in the five areas (labeled with location identifiers).

The soil samples were analyzed by ALS Laboratories in Ft Collins, CO for radium-226 and isotopic thorium. The latter analysis was included to assess the potential effects of thorium series isotopes on the correlation. Table 4 lists the results of the measurements and radium-226 concentrations in the soil samples. The means of the gamma count rate measurements range from 10,241 to 57,101 cpm. The concentrations of radium-226 range from 0.64 to 12.05 picocuries per gram (pCi/g).

Table 5 lists the concentrations of isotopes of thorium (thorium-228, -230, and -232) in the same soil samples.

Laboratory analyses are presented in Appendix F, Laboratory Analytical Data and Data Usability Report, in “Boyd Tisi No.2 Western Removal Site Evaluation Report” (Stantec, 2017).

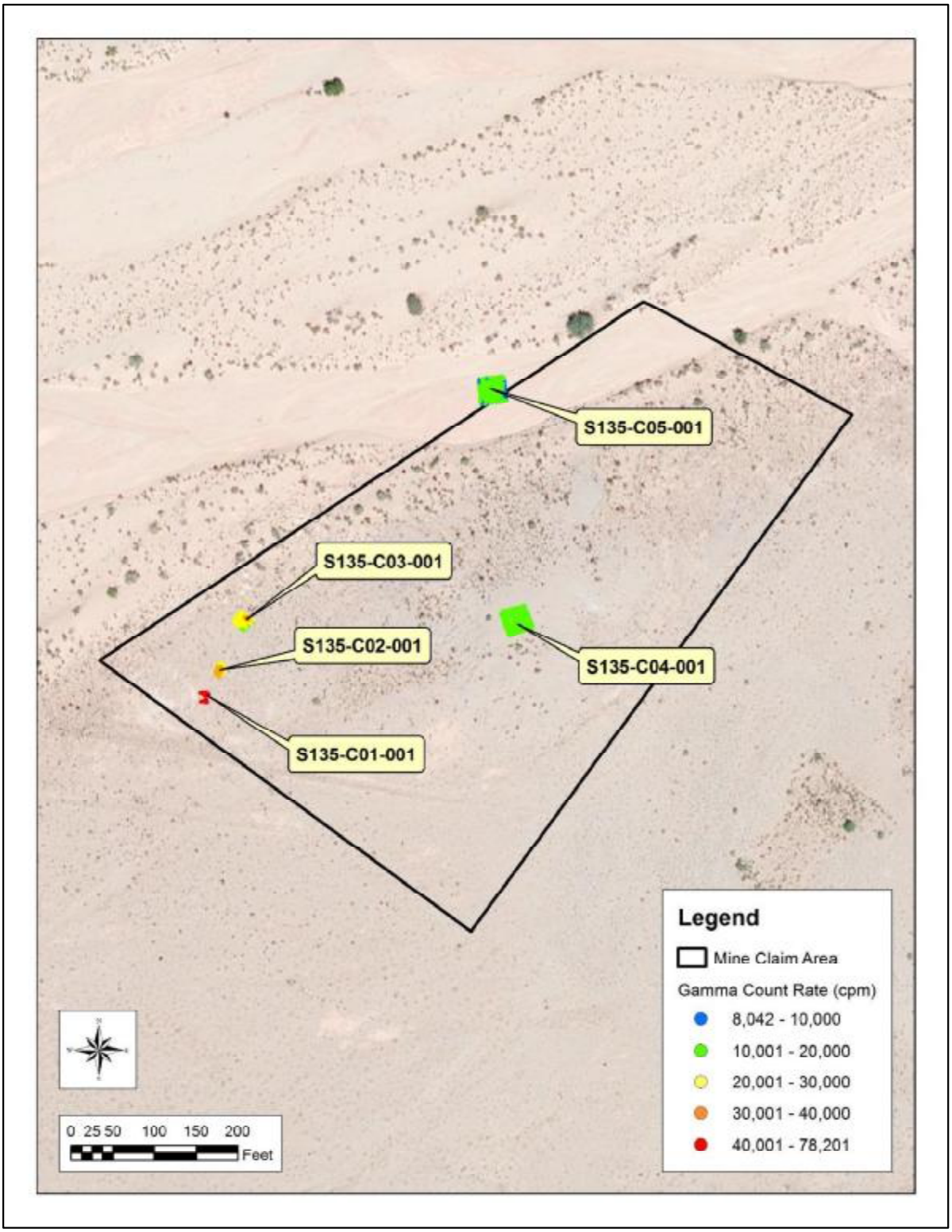

Figure 7. GPS-based gamma count rate measurements made for the correlation study.

Table 4. Gamma count rates and associated concentrations of radium-226 in samples of surface soils obtained in the correlation study.

	Gamma Count Rate (cpm)				Ra-226 (pCi/g)		
Location	Mean	Minimum	Maximum	σ	Result	Error ±1σ	MDL
S135-C01-001	57,101	39,959	78,201	10,640	12.05	1.55	0.65
S135-C02-001	28,982	21,520	36,261	2854	2.02	0.38	0.48
S135-C03-001	22,364	15,622	40,046	4923	1.04	0.24	0.3
S135-C04-001	13,211	10,891	16,588	960	0.98	0.25	0.43
S135-C05-001	10,241	8,042	13,448	903	0.64	0.2	0.32

Notes:
cpm = counts per minute
MDL = method detection limit
pCi/g = picocuries per gram
σ = standard deviation

Table 5. Concentrations of isotopes of thorium in samples of surface soils obtained in the correlation study.

	Thorium-228 (pCi/g)			Thorium-230 (pCi/g)			Thorium-232 (pCi/g)		
Sample ID	Result	Error ± 1 σ	MDL	Result	Error ± 1 σ	MDL	Result	Error ± 1 σ	MDL
S135-C01-001	0.7	0.13	0.035	6.1	0.95	0.085	0.745	0.135	0.015
S135-C02-001	0.71	0.13	0.04	1.35	0.23	0.07	0.71	0.13	0.02
S135-C03-001	0.61	0.12	0.03	0.85	0.16	0.07	0.59	0.11	0.01
S135-C04-001	0.985	0.17	0.03	0.785	0.145	0.07	0.89	0.16	0.01
S135-C05-001	0.4485	0.095	0.054	0.59	0.12	0.07	0.4845	0.096	0.005

Notes:
MDL = method detection limit
pCi/g = picocuries per gram
σ = standard deviation

A model was made of the results in Table 4, predicting the concentrations of radium-226 in surface soils from the mean gamma count rate in each area. The best predictive relationship between the measurements, shown in Table 4, is a strong, power function with a Pearson's Correlation Coefficient (R^2) of 0.8782, as expressed in the equation:

$$\text{Radium-226 concentration (pCi/g)} = 2 \times 10^{-7} \times \text{Gamma Count Rate (cpm)}^{1.6039}$$

R^2 is a measure of the dependence between two variables, and is expressed as a value between -1 and +1 where +1 is a positive correlation, 0 is no correlation, and -1 is a negative correlation. The root mean square error and p-value for the correlation are 0.46659 and 0.0187, respectively; these parameters are not data quality objectives (DQOs) and are included only as information.

The concentrations of thorium-232 and thorium-228, isotopes in the thorium series, in the correlation samples are similar and at most 0.985 pCi/g. Given these low concentrations and the high R^2 of the power function, the thorium series radionuclides do not appear to affect the prediction of concentrations of radium-226, using gamma count rates.

This equation was used to convert the gamma count rate measurements observed in the gamma surveys to predicted concentrations of radium-226. Table 6 presents summary statistics for the predicted concentrations of radium-226 in the Survey Area. The range of the predicted concentrations of radium-226 in the Survey Area is 0.4 to 18.7 pCi/g, with a mean and median of 0.7 pCi/g.

Figure 9 shows the predicted concentrations of radium-226, the spatial and numerical distribution of which mirror those depicted in Figure 4.

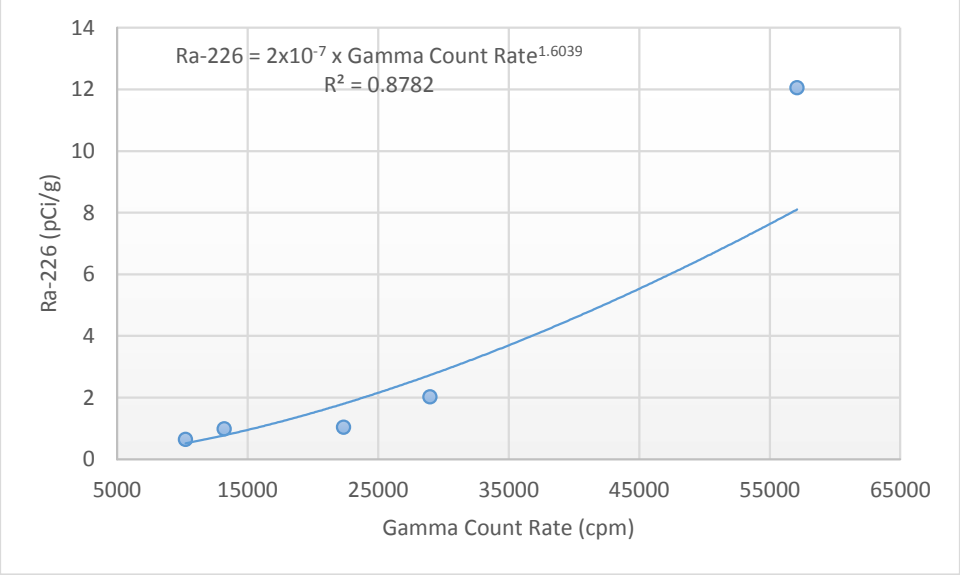

Figure 8. Correlation of gamma count rates and concentrations of radium-226 in surface soils.

Table 6. Predicted concentrations of radium-226 in the Survey Area.

Parameter	Radium-226 (pCi/g)
n	17,504
Minimum	0.4
Maximum	18.7
Mean	0.7
Median	0.7
Standard Deviation	0.5

Notes:
pCi/g = picocuries per gram

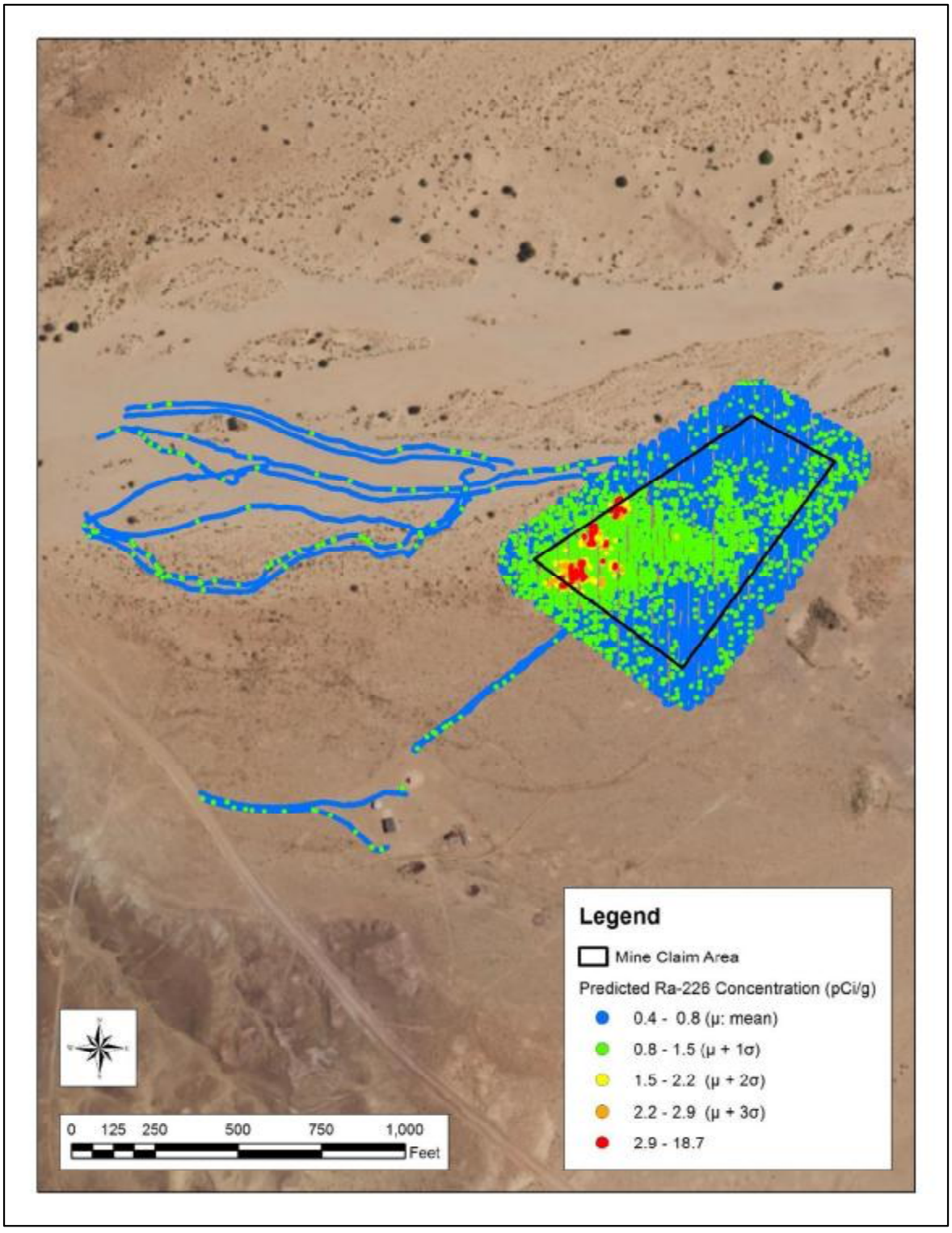

Figure 9. Predicted concentrations of radium-226 in the Survey Area.

3.2 Equilibrium in the uranium series

Secular equilibrium occurs when the activities of a parent radionuclide and its decay product are equal. This can occur in a closed system, when the half-life of the parent radionuclide is much larger than that of the decay product.

The ratio of the concentrations of radium-226 to thorium-230 can be used as an indicator of the status of equilibrium in the uranium series. The half-lives of thorium-230 and radium-226 are 77,000 and 1,600 years, respectively. The ratios in the five correlation samples are 2.0 (Sample S135-C01-001), 1.5 (Sample S135-C02-001), 1.2 (Sample S135-C03-001), 1.2 (Sample S135-C04-001), and 1.1 (Sample S135-C05-001), indicating that thorium-230 is depleted in relation to radium-226 and, by extrapolation, the uranium series itself is not in secular equilibrium.

Note this observation is based on the results of five samples, subject to differing analytical methods. Gamma spectroscopy, the method used to determine the concentration of radium-226, assesses an intact portion of the whole sample as it was collected. The concentration of thorium-230 was determined by alpha spectroscopy of an acid-leached aliquot of the sample.

3.3 Exposure rates and gamma count rates

Field personnel made co-located one-minute static count rate and exposure rate measurements at the five locations within the Survey Area, representing the range of gamma count rates obtained in the GPS-based gamma survey. Figure 7 shows the locations of the co-located measurements, which were made in the centers of the areas.

The gamma count rate and exposure rate measurements were made on October 26, 2016 at 0.5 m and 1 m above the ground surface, respectively. The gamma count rate measurements were made using one of the three sodium iodide detection system used in the GPS-based gamma survey of the AUM (Serial Number PR303727/254772). The exposure rate measurements were made using a Reuter Stokes Model RSS-131 high pressure ionization chamber (HPIC) at six-second intervals for about 10 minutes. The exposure rate used in the comparison was the mean of these measurements, less those occurring in initial instrument spikes. The HPIC was in current calibration and function checked before and after use. Calibration forms for the HPIC are provided in Appendix A.

Table 7 presents the results for the two types of measurements made at each of the five locations. Appendix B presents the individual (one second) exposure rate measurements.

The Pearson's Correlation Coefficient (R^2) is a measure of the dependence between two variables, and is expressed as a value between -1 and +1 where +1 is a positive correlation, 0 is no correlation, and -1 is a negative correlation. The best predictive relationship between the measurements is linear with a R^2 of 0.9923, strongly indicating a positive correlation. The root mean square error and p-value for the correlation are 1.091 and 0.0003, respectively; these parameters are not DQOs and are included only as information.

The following equation is the linear regression (shown in Figure 10) between the mean exposure rate and gamma count rate results in Table 7 that was generated using MS Excel:

$$\text{Exposure Rate (µR/h)} = 5\text{x}10^{-4} \text{ x Gamma Count Rate (cpm)} + 7.0$$

Figure 11 presents the exposure rates predicted from the gamma count rate measurements, the spatial and numerical distribution of which mirror those depicted in Figure 4.

Tables 8 and 9 present summary statistics for the predicted exposure rates in the potential Background Reference Area and Survey Area, respectively. The range of predicted exposure rates at BG3 is 12.4 to 14.5 µR/h, with a mean and median of 13.4 µR/h. The range of predicted exposure rates in the Survey Area is 11.2 to 53.7 µR/h, with a mean and median of 13.1 and 12.9 µR/h, respectively.

Table 7. Co-located gamma count rate and exposure rate measurements.

Location	Gamma Count Rate[a] (cpm)	Exposure Rate (µR/h)
S135-C01-001	68,298	37.9
S135-C02-001	32,373	21
S135-C03-001	19,363	17.4
S135-C04-001	13,296	12.7
S135-C05-001	10,175	11

Notes:
[a]The gamma count rate is a one-minute, static measurement made at the center of the plot
cpm = counts per minute
µR/h = microRoentgens per hour

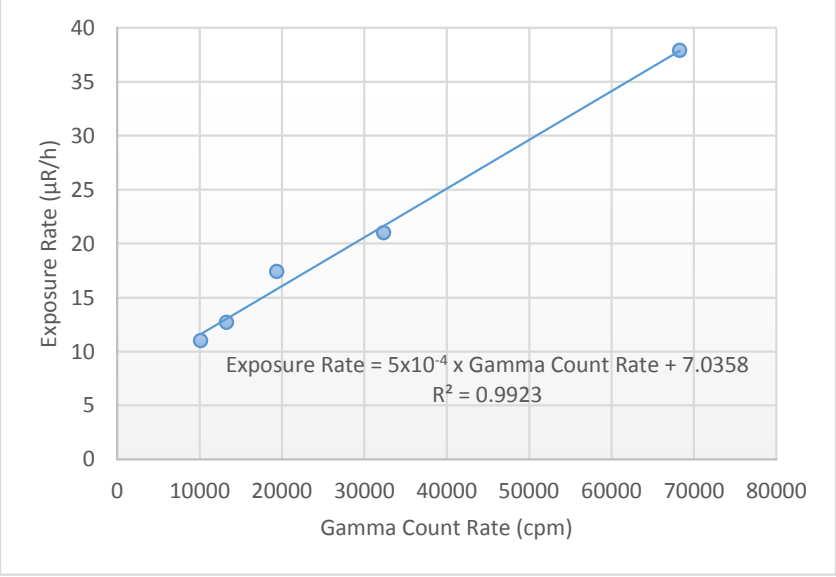

Figure 10. Correlation of gamma count rates and exposure rates.

Table 8. Predicted exposure rates in the potential Background Reference Area.

Parameter	Exposure Rate (µR/h)
n	116
Minimum	12.4
Maximum	14.5
Mean	13.4
Median	13.4
Standard Deviation	0.4

Notes:
µR/h = microRoentgens per hour

Table 9. Predicted exposure rates in the Survey Area.

Parameter	Exposure Rate (µR/h)
n	17,504
Minimum	11.2
Maximum	53.7
Mean	13.1
Median	12.9
Standard Deviation	1.7

Notes:
µR/h = microRoentgens per hour

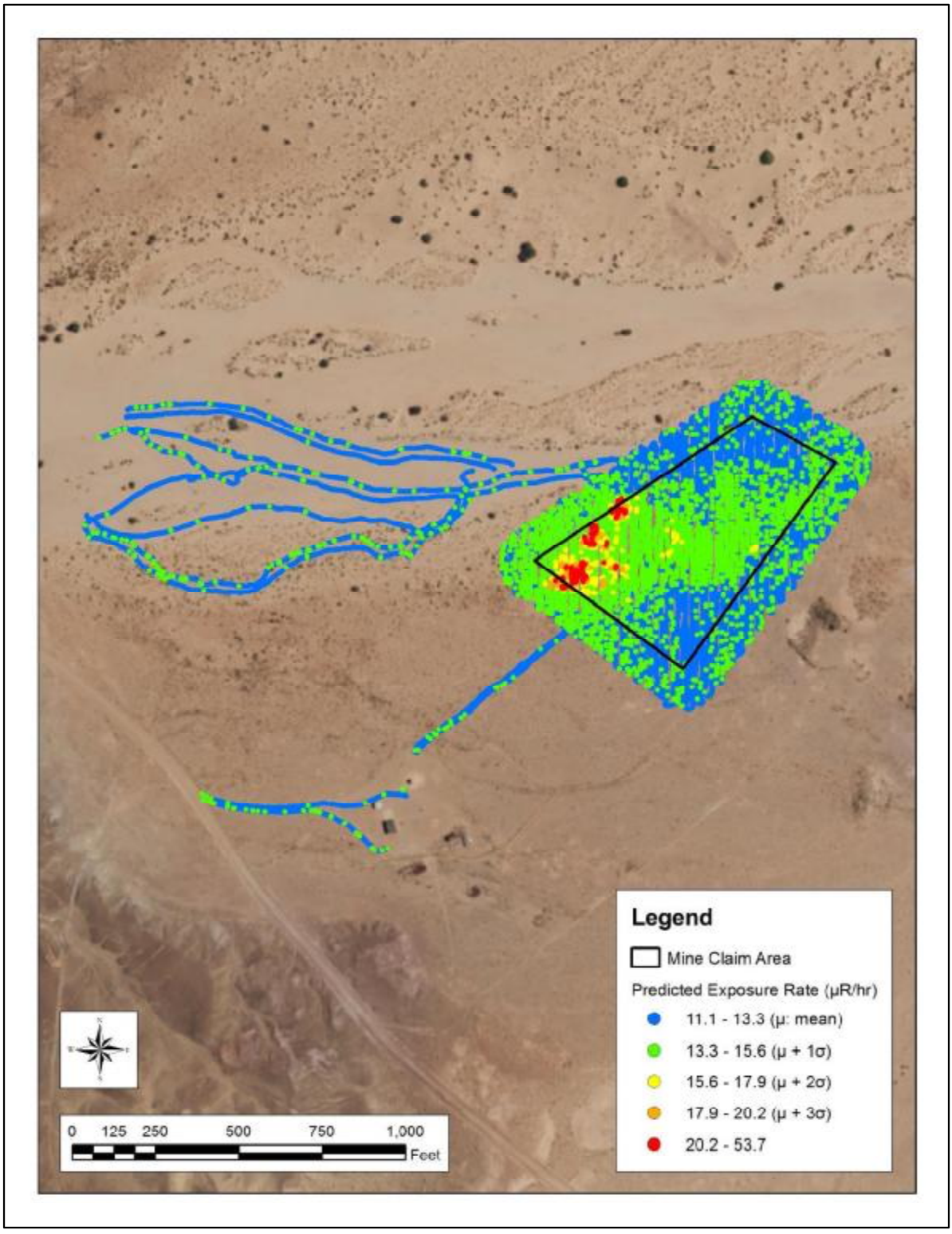

Figure 11. Predicted exposure rates in the Survey Area.

4.0 Deviations to RSE Workplan

The RSE Workplan specifies that the comparison of gamma count rates and radium concentrations in surface soils was to occur in 900 square foot areas. Field personnel adjusted the areas as necessary, to minimize the variability of gamma count rates observed, particularly where the spatial distribution of waste rock was heterogeneous.

5.0 Conclusions

The findings of the RSE pertaining to these activities are:

- The horizontal extent and magnitude of mining-related materials were delineated sufficiently to support additional characterization of the subsurface.

- Elevated count rates were observed in the southwest corner of the mine claim at outcrops of bedrock and soils in an area that appeared to be a former waste pile.

- A potential Background Reference Area was established.

- The relationship between gamma count rates and concentrations of radium-226 in surface soils (0 to 0.5 ft bgs) is described by a linear regression model:

$$\text{Radium-226 Concentration (pCi/g)} = 2\text{x}10^{-7} \times \text{Gamma Count Rate (cpm)}^{1.6039}$$

- The distribution of concentrations of radium-226 in surface soils predicted using this model resembles a lognormal distribution. The values in the Survey Area range from 0.4 to 18.7, with a central tendency (median) of 0.7 pCi/g.

- The relationship between gamma count rates and exposure rates is described by a linear regression model:

$$\text{Exposure Rate (µR/h)} = \text{Gamma Count Rate (cpm)} \times 5\text{x}10^{-4} + 7.0$$

- The distribution of exposure rates predicted using this model resembles a lognormal distribution. The values in the Survey Area range from 11.2 to 53.7, with a central tendency (median) of 12.9 µR/h.

6.0 References

ANSI, 1997. Radiation Protection Instrumentation Test and Calibration, Portable Survey Instruments, American National Standards Institute (ANSI) Standard N232A. June 20, 2014.

MWH, 2016. Navajo Nation AUM Environmental Response Trust, First Phase, Removal Site Evaluation Work Plan, October 24, 2016.

Stantec, 2017. Boyd Tisi No. 2 Western Removal Site Evaluation Report. October 2017.

Appendix A Instrument calibration and completed function check forms

Certificate of Calibration

Calibration and Voltage Plateau

Environmental Restoration Group, Inc.
8809 Washington St NE, Suite 150
Albuquerque, NM 87113
(505) 298-4224
www.ERGoffice.com

Meter: Manufacturer: Ludlum Model Number: 2221r Serial Number: 196086

Detector: Manufacturer: Ludlum Model Number: 44-10 Serial Number: PR295014

- ✔ Mechanical Check
- ✔ F/S Response Check
- ✔ Geotropism
- ✔ Meter Zeroed
- ✔ THR/WIN Operation
- ✔ Reset Check
- ✔ Audio Check
- ✔ Battery Check (Min 4.4 VDC)

HV Check (+/- 2.5%): ✔ 500 V ✔ 1000 V ✔ 1500 V

Cable Length: 39-inch ✔ 72-inch Other:

Source Distance: Contact ✔ 6 inches Other:

Source Geometry: ✔ Side Below Other:

Threshold: 10 mV

Window:

Barometric Pressure: 24.78 inches Hg

Temperature: 74 °F

Relative Humidity: 20 %

Instrument found within tolerance: ✔ Yes No

Range Multiplier	Reference Setting	"As Found Reading"	Meter Reading	Integrated 1-Min. Count	Log Scale Count
x 1000	400	400	400	399802	400
x 1000	100	100	100		100
x 100	400	400	400	39989	400
x 100	100	100	100		100
x 10	400	400	400	3999	400
x 10	100	100	100		100
x 1	400	400	400	400	400
x 1	100	100	100		100

High Voltage	Source Counts	Background
700	28456	
800	53330	
900	64430	
950	66209	
1000	68333	
1050	69077	
1100	69121	8924
1150	69973	
1200	70155	

Voltage Plateau

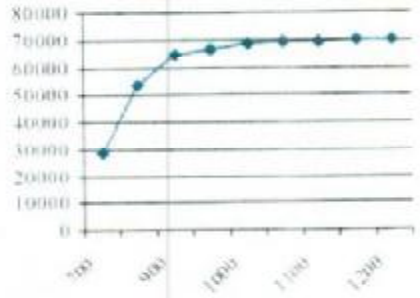

Comments: HV Plateau Scaler Count Time = 1-min. Recommended HV = 1100

Reference Instruments and/or Sources:

Ludlum pulser serial number: 97743 ✔ 201932

Alpha Source: Th-230 @ 12,800 dpm (1/4/12) sn: 4098-03

Beta Source: Tc-99 @ 17,700 dpm (1/4/12) sn: 4099-03

Fluke multimeter serial number: 87490128

✔ Gamma Source: Cs-137 @ 5.2 uCi (1/4/12) sn: 4097-03

Other Source:

Calibrated By:

Calibration Date: 7/20/16 Calibration Due: 7/20/17

Reviewed By:

Date: 7/20/16

This calibration conforms to the requirements and acceptable calibration conditions of ANSI N323A-1997

Environmental Restoration Group, Inc.
8809 Washington St NE, Suite 150
Albuquerque, NM 87113
(505) 298-4224
www.ERGoffice.com

Certificate of Calibration

Calibration and Voltage Plateau

Meter: Manufacturer: Ludlum Model Number: 2221r Serial Number: 254772

Detector: Manufacturer: Ludlum Model Number: 44-10 Serial Number: PR303727

HV Check (+/- 2.5%): ✔ 500 V ✔ 1000 V ✔ 1500 V

Cable Length: ☐ 39-inch ✔ 72-inch ☐ Other:

✔ Mechanical Check ✔ THR/WIN Operation
✔ F/S Response Check ✔ Reset Check
✔ Geotropism ✔ Audio Check
✔ Meter Zeroed ✔ Battery Check (Min 4.4 VDC)

Source Distance: ☐ Contact ✔ 6 inches ☐ Other:

Source Geometry: ✔ Side ☐ Below ☐ Other:

Threshold: 10 mV

Window:

Barometric Pressure: 24.24 inches Hg
Temperature: 78 °F
Relative Humidity: 20 %

Instrument found within tolerance: ✔ Yes ☐ No

Range/Multiplier	Reference Setting	"As Found Reading"	Meter Reading	Integrated 1-Min. Count	Log Scale Count
x 1000	400	400	400	399859	400
x 1000	100	100	100		100
x 100	400	400	400	39991	400
x 100	100	100	100		100
x 10	400	400	400	4001	400
x 10	100	100	100		100
x 1	400	400	400	400	400
x 1	100	100	100		100

High Voltage	Source Counts	Background
700	52821	
800	65213	
900	68644	
950	69245	
1000	69492	9111
1050	69792	
1100	70472	
1150	71183	
1200	70571	

Voltage Plateau

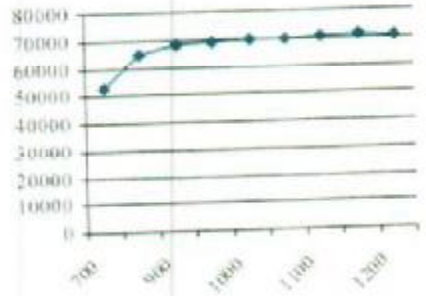

Comments: HV Plateau Scaler Count Time = 1-min. Recommended HV = 1000

Reference Instruments and/or Sources:

Ludlum pulser serial number: ☐ 97743 ✔ 201932

☐ Alpha Source: Th-230 @ 12,800 dpm (1/4/12) sn: 4098-03

☐ Beta Source: Tc-99 @ 17,700 dpm (1/4/12) sn: 4099-03

Fluke multimeter serial number: 87490128

✔ Gamma Source Cs-137 @ 5.2 uCi (1/4/12) sn: 4097-03

☐ Other Source:

Calibrated By:

Reviewed By:

Calibration Date: ~~2 March 17~~ 2/28/17 ESB

Calibration Due: ~~2 March 18~~ 2/28/18 ESB

Date: 3-1-17

This calibration conforms to the requirements and acceptable calibration conditions of ANSI N323A - 1997

Certificate of Calibration

Calibration and Voltage Plateau

Environmental Restoration Group, Inc.
8809 Washington St. NE, Suite 150
Albuquerque, NM 87113
(505) 298-4224
www.ERGoffice.com

Meter: Manufacturer: Ludlum Model Number: 2221r Serial Number: 254772

Detector: Manufacturer: Ludlum Model Number: 44-10 Serial Number: PR303727

- ✔ Mechanical Check
- ✔ F/S Response Check
- ✔ Geotropism
- ✔ Meter Zeroed
- ✔ THR WIN Operation
- ✔ Reset Check
- ✔ Audio Check
- ✔ Battery Check (Min 4.4 VDC)

HV Check (+ - 2.5%): ✔ 500 V ✔ 1000 V ✔ 1500 V

Cable Length: 39-inch ✔ 72-inch Other:

Source Distance: Contact ✔ 6 inches Other:

Source Geometry: ✔ Side Below Other:

Threshold: 10 mV

Window:

Barometric Pressure: 24.75 inches Hg

Temperature: 74 °F

Relative Humidity: 20 %

Instrument found within tolerance: ✔ Yes No

Range Multiplier	Reference Setting	"As Found Reading"	Meter Reading	Integrated 1-Min. Count	Log Scale Count
x 1000	400	400	400	398857	400
x 1000	100	100	100		100
x 100	400	400	400	39913	400
x 100	100	100	100		100
x 10	400	400	400	3992	400
x 10	100	100	100		100
x 1	400	400	400	399	400
x 1	100	100	100		100

High Voltage	Source Counts	Background
700	53620	
800	64979	
900	67955	
950	67795	
1000	68536	9542
1050	69153	
1100	69331	
1150	69346	
1200	69492	

Voltage Plateau

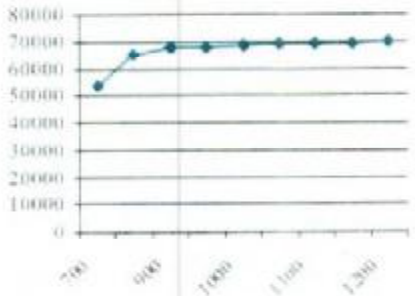

Comments: HV Plateau Scaler Count Time = 1-min. Recommended HV = 1000

Reference Instruments and/or Sources:

Ludlum pulser serial number: 97743 ✔ 201932

Fluke multimeter serial number: 87490128

Alpha Source: Th-230 @ 12,800 dpm (1-4-12) sn: 4098-03

✔ Gamma Source: Cs-137 @ 5.2 uCi (1-4-12) sn: 4097-03

Beta Source: Tc-99 @ 17,700 dpm (1-4-12) sn: 4099-03

Other Source:

Calibrated By:

Calibration Date: 7-6-16 Calibration Due: 7-6-17

Reviewed By:

Date: 7/20/16

ERG Form ITC-101.A

This calibration conforms to the requirements and acceptable calibration conditions of ANSI N323A-1997

K&S Associates, Inc.
1926 Elm Tree Drive
Nashville, Tennessee 37210-3718
Phone 800-522-2325 Fax 615-871-0856

ACCREDITED
CALIBRATION CERT #1866.01

CALIBRATION REPORT

SUBMITTED BY: ERG
8809 Washington Street Northeast
Suite 150
Albuquerque, NM 87113

INSTRUMENT: Reuter Stokes RSS-131, #07J00KM1

REPORT NUMBER: 161866
TEST NUMBER(S) M161588
REPORT DATE: June 29, 2016

The CALIBRATION COEFFICIENTS contained in this report were obtained by intercomparison with instruments calibrated by, or directly traceable to, the National Institute of Standards and Technology (NIST). K• S Associates, Inc. is licensed by the State of Tennessee (R-19075-G97, R-19136-B00) to perform calibrations, and is recognized by the Health Physics Society (HPS) as an ACCREDITED INSTRUMENT CALIBRATION LABORATORY. As part of the accreditation K • S participates in a measurement assurance program conducted by the HPS and NIST. K • S also certifies that the calibration was performed using quality policies, methods and procedures that meet or exceed the requirements of ISO/IEC 17025:2005.

This laboratory is accredited by the American Association for Laboratory Accreditation (A2LA) and the results shown in this report have been determined in accordance with the laboratory's terms of accreditation unless stated otherwise in this report

The CALIBRATION COEFFICIENTS stated herein are valid under the conditions specified. It is the instrument user's responsibility to perform the appropriate constancy tests prior to shipment and after return from calibration. It is also the responsibility of the user to assure that the interpretation of the information in this report is consistent with that intended by K • S Associates, Inc.

This report may not be reproduced except in full without the written permission of K• S Associates, Inc.

K&S Associates, Inc
Nashville, Tennessee 37210-3718

ACCREDITED

CALIBRATION CERTIFICATE

Calibration Date: 6/27/2016 Report Number: 161866 Test Number: M161588

K&S certifies that the environmental radiation monitor identified below has been calibrated for radiation measurement using collimated radiation sources whose output has been calibrated with instruments calibrated by or directly traceable to the National Institute of Standards and Technology. K&S is accredited by the American Association for Laboratory Accreditation to perform environmental level calibrations and further certifies that the calibration was performed using accredited policies and procedures (SI 25) that meet or exceed the requirements of ISO/IEC 17025:2005.

Sensor Type: 100 mR/h

Serial Number: 07J00KM1

Average Calibration Coefficient for the range of 0.012 mR/h – 0.220 mR/h*:
1.02 mR/"mR" reading
(Measured at 4 points)

Calibration Coefficient for the 50.0 mR/h point*:
1.12 mR/"mR" reading

Calibration Coefficient for the 80.0 mR/h point*:
1.10 mR/"mR" reading

Found RAC: 2.169e-8

*Multiply the reading in **mR/h** by the Calibration Coefficient to obtain true **mR/h**.

Calibrated By: Richard Hardison Reviewed By:

Richard Hardison
Calibration Technician

Title: Calibration Technician Title: Calibration Physicist

Log: M-53 Page: 73

K&S Associates, Inc
Nashville, Tennessee 37210-3718

ACCREDITED

AS FOUND DATA
Reuter-Stokes Chamber Calibration

June 27, 2016 *Test Number* *M161588*

CHAMBER:

Mfgr: Reuter Stokes

Model: RSS-131

Serial: 07J00KM1

SUBMITTED BY:

ERG

Albuquerque, NM

ATMOSPHERIC COMMUNICATION: SEALED

ORIENTATION/CONDITIONS:

Serial number away from source

"True" background exposure rate of 6.7 uR/h, instrument reading was 0.0076 mR/h

POLARIZING POTENTIAL 401V

LEAKAGE: negligible

BEAM QUALITY		EXPOSURE RATE		CALIBRATION COEFFICIENT	UNCERT	LOG
CsEn220	(11mCi)	0.22mR/h	N_x=	1.00 mR/h/rdg	11%	M-53 73
CsEn80	(11mCi)	0.08mR/h	N_x=	1.03 mR/h/rdg	11%	
CsEnv12	(1mCi)	0.012mR/h	N_x=	1.01 mR/h/rdg	11%	
CsEnv15	(1mCi)	0.015mR/h	N_x=	1.02 mR/h/rdg	11%	
Cs199m	(20 Ci)	50mR/h	N_x=	1.12 mR/h/rdg	8%	
Cs252m	(20 Ci)	80mR/h	N_x=	1.10 mR/h/rdg	8%	

Comments Batt: 6.1V, Temp: 24.6 deg C, K&S Environment: Temp:21 deg C , RH 59%, Press: 752 mmHg:
Report Number: 161866
Refer to Appendix I of this report for details on PIC ionization chamber calibrations. Procedure: SI 25
RAC Found: 2.169e-8

Calibrated By Richard Hardison **Reviewed By:**

Title: Calibration Technician **Title:**

Checked By: **Prepared By:** REH

Form RSS

ERG

Single-Channel Function Check Log

Environmental Restoration Group, Inc.
8809 Washington St. NE, Suite 150
Albuquerque, NM 87113
(505) 298-4224

METER Detector (STET)	
Manufacturer:	Ludlum
Model:	2221
Serial No.:	138628
Cal. Due Date:	7-9-17

DETECTOR Hele (STET)	
Manufacturer:	Ludlum
Model:	44-10
Serial No.:	PR154615
Cal. Due Date:	7-9-17

Comments:
NNERT

Source: Cs-137 Activity: 5.12 uCi Source Date: 6-6-94 Distance to Source: 6 inches

Serial No.: 333-94 Emission Rate: NA cpm/emissions

Date	Time	Battery	High Voltage	Threshhold	Source Counts	BKG Counts	Net Counts	Initials	Note(s):
10-5-16	0900	5.9	1184	165	46216	7136	39080	NW	Tronic 1 ref. pt.
10-5-16	1546	5.7	1198	185	45357	6266	39091	NW	
10-8-16	0837	5.7	1182	164	45202	6004	39198	NW	Detector to Oak Ridge Lab
10-8-16	1702	5.6	1128	112	49505	6399	43106	NW	Cont. Suite) F-to-
10-12-16	1334	5.7	1139	122	46929	6807	40122	NW	Bertha 3 ref. pt
10-12-16	1610	5.6	1130	115	44390	6093	38297	NW	Comfort Suites F-to-
10-13-16	0917	5.6	1129	110	44223	7095	37124	NW	Alamo ref pt.
10-13-16	1910	~~5.5~~ NW	~~9~~ NW			Did not use		NW	Comfort Suites ref pt.
10-15-16	0929	5.7	1173	160	47369	7023	40346	NW	Herring Blackwater
10-15-16	1821	5.7	1173	163	42767	5169	37598	NW	Hot Rock Inn Lot
10-26-16	0755	5.7	1223	202	50474	8000	42474	NW	Bond Test
10-26-16	1540	5.6	1152	138	45033	6331	38702	NW	Bond Test

Reviewed by: [signature] Review Date: 11/29/16

ERG

Single-Channel Function Check Log

Environmental Restoration Group, Inc
8809 Washington St. NE, Suite 150
Albuquerque, NM 87113
(505) 298-4224

METER	
Manufactuer:	Ludlum
Model:	2221
Serial No.:	254792
Cal. Due Date:	7-19-17

DETECTOR	
Manufacturer:	Ludlum
Model:	44-10
Serial No.:	PR303727
Cal. Due Date:	7-19-17

Comments:
NNSRT

Source: Cs-137 Activity: 5.12 uCi Source Date: 6-6-94 Distance to Source: 6 Inches

Serial No.: 333-94 Emission Rate: ND cpm/emissions

Date	Time	Battery	High Voltage	Threshhold	Source Counts	BKG Counts	Net Counts	Initials	Note(s): Project reference points
10-11-16	0927	5.5	1002	99	45599	6141	39858	MW	NA-0904
10-11-16	1720	5.5	998	99	48630	6576	42054	MW	Comfort Suites Parking Lot
10-12-16	0858	5.5	1003	99	44980	5506	39474	MW	NA-0928
10-12-16	1618	5.5	998	99	43779	6289	37490	MW	Comfort Suites Parking Lot
10-13-16	0911	5.5	1003	99	46726	7375	39351	MW	Alonga
10-13-16	1910	5.5	990	99	45235	6618	38617	MW	Comfort Suites Parking Lot
10-14-16	0926	5.5	1004	99	45657	7242	38415	MW	Berton 3
10-14-16	1540	5.4	998	99	44751	6480	38271	MW	Comfort Suites Parking Lot
10-15-16	0927	5.5	1001	99	45697	6933	38764	MW	Henry Blackwater
10-15-16	1824	5.4	996	99	42528	4945	37583	MW	Hat Rock Inn Parking Lot
10-24-16	0800	6.2	1005	100	48507	9260	39237	MW	Boyd Tisi
10-24-16	1207	6.0	1001	99	46290	8126	38164	MW	Boyd Tisi

a. Changed battery

Reviewed by: MW Review Date: 11/29/16

ERG

Single-Channel Function Check Log

Environmental Restoration Group, Inc.
8809 Washington St. NE, Suite 150
Albuquerque, NM 87113
(505) 298-4224

METER	
Manufacturer:	Ludlum
Model:	2221
Serial No.:	196086
Cal. Due Date:	7-9-17

DETECTOR	
Manufacturer:	Ludlum
Model:	44-10
Serial No.:	PR ~~303727~~ 295014 NW
Cal. Due Date:	7-9-17

Comments:
NNERT

Source: Cs-137 Activity: 5.12 uCi Source Date: 6-6-94 Distance to Source: 6 inches

Serial No.: 333-94 Emission Rate: NA cpm/emissions

Date	Time	Battery	High Voltage	Threshhold	Source Counts	BKG Counts	Net Counts	Initials	Note(s): Project reference points
10-15-16	0930	5.4	1100	100	45919	7086	38833	NW	Harvey Blackwater
10-15-16	1828	5.3	1094	100	44133	4794	39339	NW	Hat Rock Inn Lot
10-24-16	0802	5.4	1106	100	47875	8702	39173	NW	Boyd Tisi
10-24-16	1211	5.2	1099	100	45787	8272	37515	NW	Boyd Tisi
10-27-16	1000	5.4	1106	100	48630	8414	40216	NW	Harvey Blackwater
10-27-16	1601	5.2	1099	99	48326	8166	40160	NW	Harvey Blackwater
10-28-16	1401	5.3	1101	100	43141	4755	38386	NW	Mitten No. 3
10-28-16	1700	5.2	1101	99	43075	4698	38377	NW	Mitten No. 3
10-29-16	0812	5.3	1105	100	44174	4908	39266	NW	Mitten No. 3
10-29-16	~~08~~ NW 1344	5.2	1098	100	42452	4621	37831	NW	Mitten No. 3
10-31-16	0835	5.3	1105	101	42258	4609	37649	NW	Mitten No. 3
10-31-16	1655	5.3	1100	100	42630	4963	37667	NW	Goulding's back SUV

Reviewed by: MA Review Date: 11/29/16

Single-Channel Function Check Log

Environmental Restoration Group, Inc.
8809 Washington St. NE, Suite 150
Albuquerque, NM 87113
(505) 298-4224

METER	
Manufacturer:	Ludlum?
Model:	2221
Serial No.:	254772
Cal. Due Date:	7.19.17

DETECTOR	
Manufacturer:	Ludlum
Model:	44-10
Serial No.:	PR303727
Cal. Due Date:	7.19.17

Comments:
NNEAT

Source: Cs-137 Activity: 5.12 uCi Source Date: 6-6-94 Distance to Source: 6 inches

Serial No.: 333-94 Emission Rate: NA cpm/emissions

Date	Time	Battery	High Voltage	Threshhold	Source Counts	BKG Counts	Net Counts	Initials	Note(s): PROJECT REFERENCE POINT
10-26-16	0637	6.1	1008	99	46974	7833	39141	NW	BOYD TISI
10-26-16	1545	6.1	992	98	42850	5959	36891	NW	BOYD TISI
10-27-16	1005	6.0	1004	99	48059	8561	39498	NW	Harvey Blackwater
10-27-16	1555	5.9	999	99	48564	8465	40099	NW	Harvey Blackwater
10-28-16	0808	5.9	1004	99	46814	9142	37672	NW	Harvey Blackwater
10-28-16	1704	5.8	1000	99	43711	5178	38533	NW	Mitka No. 3
10-29-16	0807	5.9	1005	100	43690	5203	38487	NW	Mitka No. 3
10-29-16	1342	5.8	999	99	44561	4801	39760	NW	Mitka No. 3
10-31-16	0840	5.8	1004	99	42426	5054	37372	NW	Mitka #0. 3
10-31-16	1507	5.8	999	99	44206	5069	39137	NW	Goulding's back SUV
11-1-16	0748	5.8	1006	100	44941	5342	39599	NW	Charles Keith
11-1-16	1722	5.7	1003	99	44858	5117	39741	NW	Goulding's back of SUV

Reviewed by: MM Review Date: 11/29/16

Single-Channel Function Check Log

Environmental Restoration Group, Inc.
8809 Washington St. NE, Suite 150
Albuquerque, NM 87113
(505) 298-4224

METER	
Manufacturer:	GE
Model:	RS3-131
Serial No.:	07J00KM1
Cal. Due Date:	6-29-17

DETECTOR	
Manufacturer:	SAME AS METER
Model:	
Serial No.:	
Cal. Due Date:	

Comments:
NNERT

Source: Cs-137 Activity: 5.12 uCi Source Date: 6-6-94 Distance to Source: Contact-housing

Serial No.: 333-94 Emission Rate: NA cpm/emissions

Date	Time	Battery	High Voltage	Threshhold	Source Counts	BKG Counts	Net Counts	Initials	Note(s): Project reference points (mR/h / µR/h)
10-26-16	0525	~6.4	~400	NA	~27.8	~10.5	~17.3	NW	Best Western room - Flagstaff
10-26-16	2010	~6.3	~400	NA	~26	~9.5	~16.5	NW	Goulding's room / Best Western room - Flagstaff NW
10-27-16	0720	~6.2	~400	NA	~26.7	~10.0	~16.7	NW	Goulding's room
10-29-16	1710	~6.2	~400	NA	~27.0	~10.8	~16.2	NW	Goulding's room
10-31-16	0609	~6.3	~400	NA	~27.0	~10	~16	NW	Goulding's room
10-31-16	1520	~6.3	~400	NA	~26	~10	~16	NW	Goulding's room
11-3-16	0700	~6.2	~400	NA	~26.5	~10.5	~16	NW	Goulding's room
11-3-16	1924	~6.1	~400	NA	~28.8	~12.5	~16.3	NW	Holiday Inn Chinle-room
11-9-16	0615	~6.3	~400	NA	~30	~12.8	~17.2	NW	Holiday Inn-Chinle room
11-9-16	1430	~6.2	~400	NA	~29.5	~12.5	~17	NW	Holiday Inn Chinle - room
11-11-16	0610	~6.4	~400	NA	~31.5	~13.5	~18	NW	Holiday Inn Chinle - room
11-11-16	1825	~6.2	~400	NA	~28	~11	~17	NW	Holiday Inn Chinle - room

Reviewed by: MW Review Date: 11-29-16

ERG

Single-Channel Function Check Log

Environmental Restoration Group, Inc.
8809 Washington St. NE, Suite 150
Albuquerque, NM 87113
(505) 298-4224

METER	
Manufacturer:	Ludlum
Model:	2221
Serial No.:	254992
Cal. Due Date:	2-20-18

DETECTOR	
Manufacturer:	Ludlum
Model:	44-10
Serial No.	PR 303727
Cal. Due Date:	2-20-18

Comments:
NNERT

Source: Cs-137 Activity: 4 uCi Source Date: 4-18-96 Distance to Source: 6 inches

Serial No.: 544-96 Emission Rate: N/A cpm/emissions

Date	Time	Battery	High Voltage	Threshhold	Source Counts	BKG Counts	Net Counts	Initials	Note(s):
3-16-17	1322	6.2	947	100	40116	7260	32856	NW	Cameron Trading Post lot
3-16-17	1555	6.1	982	99	38692	5986	32657	NW	Boyd Tisi
3-17-17	0811	6.2	951	100	40027	7965	32122	NW	Cameron Trading Post lot
3-17-17	1328	6.1	943	100	42203	10206	31997	NW	Boyd Tisi ~200 ft from BG4
3-18-17	0730	6.1	949	100	38598	6950	31648	NW	Harvey Blackwater
3-18-17	1505	6.0	941	100	35954	5035	30919	NW	Mitten No. 3
3-19-17	0651	6.1	949	99	36982	4952	32030	NW	Goulding's lot
3-19-17	1217	5.9	945	99	36802	5103	31699	NW	Charles Keith south of claim
3-20-17	0955	6.0	950	100	40829	8989	31840	NW	Claim 28
3-20-17	1555	5.9	943	100	37489	5569	32280	NW	Chinle parking lot
3-21-17	0635	5.9	950	100	38433	5735	32698	NW	Chinle lot
3-21-17	1657	5.9	946	100	36797	4997	31800	NW	Goulding's lot

Reviewed by: MW Review Date: 10/9/17

Appendix B Exposure Rate Measurements

Date and Time	Exposure Rate (mR/h)	Location
10/26/2016 9:42	0.059	Correlation Location 1
10/26/2016 9:42	0.1075	Correlation Location 1
10/26/2016 9:42	0.1015	Correlation Location 1
10/26/2016 9:42	0.0787	Correlation Location 1
10/26/2016 9:42	0.061	Correlation Location 1
10/26/2016 9:42	0.05	Correlation Location 1
10/26/2016 9:42	0.0438	Correlation Location 1
10/26/2016 9:42	0.0405	Correlation Location 1
10/26/2016 9:42	0.0393	Correlation Location 1
10/26/2016 9:43	0.0384	Correlation Location 1
10/26/2016 9:43	0.0381	Correlation Location 1
10/26/2016 9:43	0.0379	Correlation Location 1
10/26/2016 9:43	0.0381	Correlation Location 1
10/26/2016 9:43	0.0385	Correlation Location 1
10/26/2016 9:43	0.0383	Correlation Location 1
10/26/2016 9:43	0.038	Correlation Location 1
10/26/2016 9:43	0.038	Correlation Location 1
10/26/2016 9:43	0.038	Correlation Location 1
10/26/2016 9:43	0.0381	Correlation Location 1
10/26/2016 9:44	0.0383	Correlation Location 1
10/26/2016 9:44	0.0384	Correlation Location 1
10/26/2016 9:44	0.0383	Correlation Location 1
10/26/2016 9:44	0.0377	Correlation Location 1
10/26/2016 9:44	0.0377	Correlation Location 1
10/26/2016 9:44	0.038	Correlation Location 1
10/26/2016 9:44	0.0384	Correlation Location 1
10/26/2016 9:44	0.0381	Correlation Location 1
10/26/2016 9:44	0.0378	Correlation Location 1
10/26/2016 9:44	0.0373	Correlation Location 1
10/26/2016 9:45	0.0372	Correlation Location 1
10/26/2016 9:45	0.0376	Correlation Location 1
10/26/2016 9:45	0.0381	Correlation Location 1
10/26/2016 9:45	0.0376	Correlation Location 1
10/26/2016 9:45	0.0376	Correlation Location 1
10/26/2016 9:45	0.0374	Correlation Location 1
10/26/2016 9:45	0.0374	Correlation Location 1
10/26/2016 9:45	0.0375	Correlation Location 1
10/26/2016 9:45	0.0375	Correlation Location 1
10/26/2016 9:45	0.0377	Correlation Location 1
10/26/2016 9:46	0.0376	Correlation Location 1
10/26/2016 9:46	0.0373	Correlation Location 1
10/26/2016 9:46	0.0373	Correlation Location 1
10/26/2016 9:46	0.0374	Correlation Location 1
10/26/2016 9:46	0.0372	Correlation Location 1
10/26/2016 9:46	0.0372	Correlation Location 1
10/26/2016 9:46	0.0375	Correlation Location 1
10/26/2016 9:46	0.0377	Correlation Location 1
10/26/2016 9:46	0.0381	Correlation Location 1
10/26/2016 9:46	0.0381	Correlation Location 1
10/26/2016 9:47	0.0379	Correlation Location 1
10/26/2016 9:47	0.0381	Correlation Location 1
10/26/2016 9:47	0.0381	Correlation Location 1
10/26/2016 9:47	0.0378	Correlation Location 1
10/26/2016 9:47	0.0378	Correlation Location 1
10/26/2016 9:47	0.0379	Correlation Location 1
10/26/2016 9:47	0.0377	Correlation Location 1
10/26/2016 9:47	0.038	Correlation Location 1
10/26/2016 9:47	0.0381	Correlation Location 1
10/26/2016 9:47	0.0384	Correlation Location 1
10/26/2016 9:48	0.0385	Correlation Location 1
10/26/2016 9:48	0.0383	Correlation Location 1
10/26/2016 9:48	0.0376	Correlation Location 1
10/26/2016 9:48	0.0374	Correlation Location 1
10/26/2016 9:48	0.0373	Correlation Location 1
10/26/2016 9:48	0.0373	Correlation Location 1
10/26/2016 9:48	0.0374	Correlation Location 1
10/26/2016 9:48	0.0374	Correlation Location 1
10/26/2016 9:48	0.0376	Correlation Location 1
10/26/2016 9:48	0.0377	Correlation Location 1
10/26/2016 9:49	0.038	Correlation Location 1
10/26/2016 9:49	0.0379	Correlation Location 1
10/26/2016 9:49	0.0375	Correlation Location 1
10/26/2016 9:49	0.0378	Correlation Location 1
10/26/2016 9:49	0.0381	Correlation Location 1
10/26/2016 9:49	0.038	Correlation Location 1
10/26/2016 9:49	0.0377	Correlation Location 1
10/26/2016 9:49	0.0377	Correlation Location 1
10/26/2016 9:49	0.0373	Correlation Location 1
10/26/2016 9:49	0.0376	Correlation Location 1
10/26/2016 9:50	0.0383	Correlation Location 1
10/26/2016 9:50	0.0381	Correlation Location 1
10/26/2016 9:50	0.0383	Correlation Location 1
10/26/2016 9:50	0.0385	Correlation Location 1
10/26/2016 9:50	0.0381	Correlation Location 1
10/26/2016 9:50	0.0377	Correlation Location 1
10/26/2016 9:50	0.0376	Correlation Location 1
10/26/2016 9:50	0.0373	Correlation Location 1
10/26/2016 9:50	0.0374	Correlation Location 1

Date and Time	Exposure Rate (mR/h)	Location
10/26/2016 9:50	0.0378	Correlation Location 1
10/26/2016 9:51	0.038	Correlation Location 1
10/26/2016 9:51	0.0381	Correlation Location 1
10/26/2016 9:51	0.0379	Correlation Location 1
10/26/2016 9:51	0.0381	Correlation Location 1
10/26/2016 9:51	0.0383	Correlation Location 1
10/26/2016 9:51	0.0385	Correlation Location 1
10/26/2016 9:51	0.0389	Correlation Location 1
10/26/2016 9:51	0.0389	Correlation Location 1
10/26/2016 9:51	0.0384	Correlation Location 1
10/26/2016 9:51	0.0384	Correlation Location 1
10/26/2016 9:52	0.0387	Correlation Location 1
10/26/2016 9:52	0.0389	Correlation Location 1
10/26/2016 9:52	0.0385	Correlation Location 1
10/26/2016 9:52	0.0381	Correlation Location 1
10/26/2016 9:52	0.0377	Correlation Location 1
10/26/2016 9:52	0.0377	Correlation Location 1
10/26/2016 9:52	0.0377	Correlation Location 1
10/26/2016 9:52	0.0378	Correlation Location 1
10/26/2016 9:52	0.0378	Correlation Location 1
10/26/2016 9:52	0.0373	Correlation Location 1
10/26/2016 10:06	0.0555	Correlation Location 2
10/26/2016 10:06	0.0983	Correlation Location 2
10/26/2016 10:06	0.0884	Correlation Location 2
10/26/2016 10:07	0.0638	Correlation Location 2
10/26/2016 10:07	0.0451	Correlation Location 2
10/26/2016 10:07	0.0336	Correlation Location 2
10/26/2016 10:07	0.0272	Correlation Location 2
10/26/2016 10:07	0.0237	Correlation Location 2
10/26/2016 10:07	0.0218	Correlation Location 2
10/26/2016 10:07	0.0211	Correlation Location 2
10/26/2016 10:07	0.0207	Correlation Location 2
10/26/2016 10:07	0.0206	Correlation Location 2
10/26/2016 10:07	0.0207	Correlation Location 2
10/26/2016 10:08	0.0206	Correlation Location 2
10/26/2016 10:08	0.0206	Correlation Location 2
10/26/2016 10:08	0.0208	Correlation Location 2
10/26/2016 10:08	0.0211	Correlation Location 2
10/26/2016 10:08	0.0213	Correlation Location 2
10/26/2016 10:08	0.0213	Correlation Location 2
10/26/2016 10:08	0.0211	Correlation Location 2
10/26/2016 10:08	0.0209	Correlation Location 2
10/26/2016 10:08	0.0208	Correlation Location 2
10/26/2016 10:08	0.0207	Correlation Location 2
10/26/2016 10:09	0.021	Correlation Location 2
10/26/2016 10:09	0.021	Correlation Location 2
10/26/2016 10:09	0.0211	Correlation Location 2
10/26/2016 10:09	0.0211	Correlation Location 2
10/26/2016 10:09	0.0211	Correlation Location 2
10/26/2016 10:09	0.021	Correlation Location 2
10/26/2016 10:09	0.0208	Correlation Location 2
10/26/2016 10:09	0.0205	Correlation Location 2
10/26/2016 10:09	0.0206	Correlation Location 2
10/26/2016 10:09	0.0209	Correlation Location 2
10/26/2016 10:10	0.0211	Correlation Location 2
10/26/2016 10:10	0.0213	Correlation Location 2
10/26/2016 10:10	0.0211	Correlation Location 2
10/26/2016 10:10	0.0213	Correlation Location 2
10/26/2016 10:10	0.0213	Correlation Location 2
10/26/2016 10:10	0.0211	Correlation Location 2
10/26/2016 10:10	0.0208	Correlation Location 2
10/26/2016 10:10	0.0207	Correlation Location 2
10/26/2016 10:10	0.0205	Correlation Location 2
10/26/2016 10:10	0.0204	Correlation Location 2
10/26/2016 10:11	0.0204	Correlation Location 2
10/26/2016 10:11	0.0204	Correlation Location 2
10/26/2016 10:11	0.0204	Correlation Location 2
10/26/2016 10:11	0.0201	Correlation Location 2
10/26/2016 10:11	0.0205	Correlation Location 2
10/26/2016 10:11	0.021	Correlation Location 2
10/26/2016 10:11	0.0211	Correlation Location 2
10/26/2016 10:11	0.0211	Correlation Location 2
10/26/2016 10:11	0.0211	Correlation Location 2
10/26/2016 10:11	0.0211	Correlation Location 2
10/26/2016 10:12	0.021	Correlation Location 2
10/26/2016 10:12	0.0207	Correlation Location 2
10/26/2016 10:12	0.021	Correlation Location 2
10/26/2016 10:12	0.0213	Correlation Location 2
10/26/2016 10:12	0.0211	Correlation Location 2
10/26/2016 10:12	0.0211	Correlation Location 2
10/26/2016 10:12	0.021	Correlation Location 2
10/26/2016 10:12	0.0207	Correlation Location 2
10/26/2016 10:12	0.0207	Correlation Location 2
10/26/2016 10:12	0.021	Correlation Location 2
10/26/2016 10:13	0.0211	Correlation Location 2
10/26/2016 10:13	0.0207	Correlation Location 2
10/26/2016 10:13	0.0207	Correlation Location 2
10/26/2016 10:13	0.0207	Correlation Location 2
10/26/2016 10:13	0.0208	Correlation Location 2
10/26/2016 10:13	0.0204	Correlation Location 2

Date and Time	Exposure Rate (mR/h)	Location
10/26/2016 10:13	0.0205	Correlation Location 2
10/26/2016 10:13	0.0209	Correlation Location 2
10/26/2016 10:13	0.021	Correlation Location 2
10/26/2016 10:13	0.0211	Correlation Location 2
10/26/2016 10:14	0.0215	Correlation Location 2
10/26/2016 10:14	0.0213	Correlation Location 2
10/26/2016 10:14	0.0213	Correlation Location 2
10/26/2016 10:14	0.021	Correlation Location 2
10/26/2016 10:14	0.0205	Correlation Location 2
10/26/2016 10:14	0.0206	Correlation Location 2
10/26/2016 10:14	0.0208	Correlation Location 2
10/26/2016 10:14	0.0211	Correlation Location 2
10/26/2016 10:14	0.0217	Correlation Location 2
10/26/2016 10:14	0.0217	Correlation Location 2
10/26/2016 10:15	0.0218	Correlation Location 2
10/26/2016 10:15	0.0213	Correlation Location 2
10/26/2016 10:15	0.0211	Correlation Location 2
10/26/2016 10:15	0.0213	Correlation Location 2
10/26/2016 10:15	0.0213	Correlation Location 2
10/26/2016 10:15	0.0217	Correlation Location 2
10/26/2016 10:15	0.022	Correlation Location 2
10/26/2016 10:15	0.0221	Correlation Location 2
10/26/2016 10:15	0.0221	Correlation Location 2
10/26/2016 10:15	0.0216	Correlation Location 2
10/26/2016 10:16	0.0217	Correlation Location 2
10/26/2016 10:16	0.0213	Correlation Location 2
10/26/2016 10:16	0.0209	Correlation Location 2
10/26/2016 10:16	0.0208	Correlation Location 2
10/26/2016 10:16	0.0206	Correlation Location 2
10/26/2016 10:16	0.0205	Correlation Location 2
10/26/2016 10:16	0.0208	Correlation Location 2
10/26/2016 10:16	0.0208	Correlation Location 2
10/26/2016 10:16	0.0206	Correlation Location 2
10/26/2016 10:16	0.0207	Correlation Location 2
10/26/2016 10:17	0.0211	Correlation Location 2
10/26/2016 10:17	0.0211	Correlation Location 2
10/26/2016 10:17	0.0211	Correlation Location 2
10/26/2016 10:17	0.0213	Correlation Location 2
10/26/2016 10:17	0.0213	Correlation Location 2
10/26/2016 10:17	0.0213	Correlation Location 2
10/26/2016 10:17	0.0213	Correlation Location 2
10/26/2016 10:37	0.0548	Correlation Location 3
10/26/2016 10:37	0.0965	Correlation Location 3
10/26/2016 10:37	0.0854	Correlation Location 3
10/26/2016 10:38	0.0601	Correlation Location 3
10/26/2016 10:38	0.0413	Correlation Location 3
10/26/2016 10:38	0.0298	Correlation Location 3
10/26/2016 10:38	0.0233	Correlation Location 3
10/26/2016 10:38	0.02	Correlation Location 3
10/26/2016 10:38	0.0185	Correlation Location 3
10/26/2016 10:38	0.0177	Correlation Location 3
10/26/2016 10:38	0.0176	Correlation Location 3
10/26/2016 10:38	0.0172	Correlation Location 3
10/26/2016 10:38	0.017	Correlation Location 3
10/26/2016 10:39	0.017	Correlation Location 3
10/26/2016 10:39	0.0173	Correlation Location 3
10/26/2016 10:39	0.0169	Correlation Location 3
10/26/2016 10:39	0.0168	Correlation Location 3
10/26/2016 10:39	0.017	Correlation Location 3
10/26/2016 10:39	0.0176	Correlation Location 3
10/26/2016 10:39	0.0174	Correlation Location 3
10/26/2016 10:39	0.0172	Correlation Location 3
10/26/2016 10:39	0.017	Correlation Location 3
10/26/2016 10:39	0.0172	Correlation Location 3
10/26/2016 10:40	0.0173	Correlation Location 3
10/26/2016 10:40	0.0172	Correlation Location 3
10/26/2016 10:40	0.0173	Correlation Location 3
10/26/2016 10:40	0.0174	Correlation Location 3
10/26/2016 10:40	0.0176	Correlation Location 3
10/26/2016 10:40	0.0173	Correlation Location 3
10/26/2016 10:40	0.017	Correlation Location 3
10/26/2016 10:40	0.0173	Correlation Location 3
10/26/2016 10:40	0.0174	Correlation Location 3
10/26/2016 10:40	0.017	Correlation Location 3
10/26/2016 10:41	0.017	Correlation Location 3
10/26/2016 10:41	0.0172	Correlation Location 3
10/26/2016 10:41	0.0174	Correlation Location 3
10/26/2016 10:41	0.0178	Correlation Location 3
10/26/2016 10:41	0.0178	Correlation Location 3
10/26/2016 10:41	0.0175	Correlation Location 3
10/26/2016 10:41	0.0176	Correlation Location 3
10/26/2016 10:41	0.0178	Correlation Location 3
10/26/2016 10:41	0.0175	Correlation Location 3
10/26/2016 10:41	0.0173	Correlation Location 3
10/26/2016 10:42	0.0173	Correlation Location 3
10/26/2016 10:42	0.0174	Correlation Location 3
10/26/2016 10:42	0.0172	Correlation Location 3
10/26/2016 10:42	0.017	Correlation Location 3
10/26/2016 10:42	0.0172	Correlation Location 3
10/26/2016 10:42	0.017	Correlation Location 3

Date and Time	Exposure Rate (mR/h)	Location
10/26/2016 10:42	0.017	Correlation Location 3
10/26/2016 10:42	0.0173	Correlation Location 3
10/26/2016 10:42	0.0175	Correlation Location 3
10/26/2016 10:42	0.0176	Correlation Location 3
10/26/2016 10:43	0.0174	Correlation Location 3
10/26/2016 10:43	0.017	Correlation Location 3
10/26/2016 10:43	0.017	Correlation Location 3
10/26/2016 10:43	0.0174	Correlation Location 3
10/26/2016 10:43	0.0175	Correlation Location 3
10/26/2016 10:43	0.0173	Correlation Location 3
10/26/2016 10:43	0.017	Correlation Location 3
10/26/2016 10:43	0.0169	Correlation Location 3
10/26/2016 10:43	0.0176	Correlation Location 3
10/26/2016 10:43	0.0177	Correlation Location 3
10/26/2016 10:44	0.0177	Correlation Location 3
10/26/2016 10:44	0.0179	Correlation Location 3
10/26/2016 10:44	0.018	Correlation Location 3
10/26/2016 10:44	0.0177	Correlation Location 3
10/26/2016 10:44	0.0175	Correlation Location 3
10/26/2016 10:44	0.0174	Correlation Location 3
10/26/2016 10:44	0.0175	Correlation Location 3
10/26/2016 10:44	0.0173	Correlation Location 3
10/26/2016 10:44	0.0173	Correlation Location 3
10/26/2016 10:44	0.0172	Correlation Location 3
10/26/2016 10:45	0.0175	Correlation Location 3
10/26/2016 10:45	0.018	Correlation Location 3
10/26/2016 10:45	0.0179	Correlation Location 3
10/26/2016 10:45	0.0175	Correlation Location 3
10/26/2016 10:45	0.0174	Correlation Location 3
10/26/2016 10:45	0.0172	Correlation Location 3
10/26/2016 10:45	0.017	Correlation Location 3
10/26/2016 10:45	0.0168	Correlation Location 3
10/26/2016 10:45	0.0168	Correlation Location 3
10/26/2016 10:45	0.0169	Correlation Location 3
10/26/2016 10:46	0.0169	Correlation Location 3
10/26/2016 10:46	0.0174	Correlation Location 3
10/26/2016 10:46	0.0178	Correlation Location 3
10/26/2016 10:46	0.0176	Correlation Location 3
10/26/2016 10:46	0.0177	Correlation Location 3
10/26/2016 10:46	0.0178	Correlation Location 3
10/26/2016 10:46	0.0174	Correlation Location 3
10/26/2016 10:46	0.0173	Correlation Location 3
10/26/2016 10:46	0.0173	Correlation Location 3
10/26/2016 10:46	0.0173	Correlation Location 3
10/26/2016 10:47	0.0177	Correlation Location 3
10/26/2016 10:47	0.018	Correlation Location 3
10/26/2016 10:47	0.018	Correlation Location 3
10/26/2016 10:47	0.0178	Correlation Location 3
10/26/2016 10:47	0.0175	Correlation Location 3
10/26/2016 10:47	0.017	Correlation Location 3
10/26/2016 10:47	0.0169	Correlation Location 3
10/26/2016 10:47	0.0173	Correlation Location 3
10/26/2016 10:47	0.0173	Correlation Location 3
10/26/2016 10:47	0.017	Correlation Location 3
10/26/2016 10:48	0.0173	Correlation Location 3
10/26/2016 10:48	0.0177	Correlation Location 3
10/26/2016 10:48	0.0173	Correlation Location 3
10/26/2016 10:48	0.0172	Correlation Location 3
10/26/2016 10:48	0.0173	Correlation Location 3
10/26/2016 11:13	0.054	Correlation Location 4
10/26/2016 11:13	0.0944	Correlation Location 4
10/26/2016 11:13	0.0823	Correlation Location 4
10/26/2016 11:13	0.0568	Correlation Location 4
10/26/2016 11:14	0.0378	Correlation Location 4
10/26/2016 11:14	0.0263	Correlation Location 4
10/26/2016 11:14	0.0201	Correlation Location 4
10/26/2016 11:14	0.017	Correlation Location 4
10/26/2016 11:14	0.0149	Correlation Location 4
10/26/2016 11:14	0.0136	Correlation Location 4
10/26/2016 11:14	0.013	Correlation Location 4
10/26/2016 11:14	0.0129	Correlation Location 4
10/26/2016 11:14	0.0128	Correlation Location 4
10/26/2016 11:14	0.0127	Correlation Location 4
10/26/2016 11:15	0.0129	Correlation Location 4
10/26/2016 11:15	0.0133	Correlation Location 4
10/26/2016 11:15	0.0132	Correlation Location 4
10/26/2016 11:15	0.0128	Correlation Location 4
10/26/2016 11:15	0.0129	Correlation Location 4
10/26/2016 11:15	0.013	Correlation Location 4
10/26/2016 11:15	0.0128	Correlation Location 4
10/26/2016 11:15	0.0127	Correlation Location 4
10/26/2016 11:15	0.0123	Correlation Location 4
10/26/2016 11:15	0.0123	Correlation Location 4
10/26/2016 11:16	0.0124	Correlation Location 4
10/26/2016 11:16	0.0123	Correlation Location 4
10/26/2016 11:16	0.0122	Correlation Location 4
10/26/2016 11:16	0.0124	Correlation Location 4
10/26/2016 11:16	0.0126	Correlation Location 4
10/26/2016 11:16	0.0123	Correlation Location 4
10/26/2016 11:16	0.0123	Correlation Location 4

Date and Time	Exposure Rate (mR/h)	Location
10/26/2016 11:16	0.0126	Correlation Location 4
10/26/2016 11:16	0.0127	Correlation Location 4
10/26/2016 11:16	0.0128	Correlation Location 4
10/26/2016 11:17	0.0127	Correlation Location 4
10/26/2016 11:17	0.0129	Correlation Location 4
10/26/2016 11:17	0.0127	Correlation Location 4
10/26/2016 11:17	0.0127	Correlation Location 4
10/26/2016 11:17	0.0123	Correlation Location 4
10/26/2016 11:17	0.0122	Correlation Location 4
10/26/2016 11:17	0.0123	Correlation Location 4
10/26/2016 11:17	0.0131	Correlation Location 4
10/26/2016 11:17	0.0134	Correlation Location 4
10/26/2016 11:17	0.0132	Correlation Location 4
10/26/2016 11:18	0.0131	Correlation Location 4
10/26/2016 11:18	0.013	Correlation Location 4
10/26/2016 11:18	0.0127	Correlation Location 4
10/26/2016 11:18	0.0127	Correlation Location 4
10/26/2016 11:18	0.013	Correlation Location 4
10/26/2016 11:18	0.0135	Correlation Location 4
10/26/2016 11:18	0.0134	Correlation Location 4
10/26/2016 11:18	0.0132	Correlation Location 4
10/26/2016 11:18	0.0133	Correlation Location 4
10/26/2016 11:18	0.0133	Correlation Location 4
10/26/2016 11:19	0.0131	Correlation Location 4
10/26/2016 11:19	0.0129	Correlation Location 4
10/26/2016 11:19	0.0128	Correlation Location 4
10/26/2016 11:19	0.0127	Correlation Location 4
10/26/2016 11:19	0.0126	Correlation Location 4
10/26/2016 11:19	0.0126	Correlation Location 4
10/26/2016 11:19	0.0124	Correlation Location 4
10/26/2016 11:19	0.0124	Correlation Location 4
10/26/2016 11:19	0.0122	Correlation Location 4
10/26/2016 11:19	0.0122	Correlation Location 4
10/26/2016 11:20	0.0122	Correlation Location 4
10/26/2016 11:20	0.0122	Correlation Location 4
10/26/2016 11:20	0.0124	Correlation Location 4
10/26/2016 11:20	0.0124	Correlation Location 4
10/26/2016 11:20	0.0124	Correlation Location 4
10/26/2016 11:20	0.0126	Correlation Location 4
10/26/2016 11:20	0.0124	Correlation Location 4
10/26/2016 11:20	0.0124	Correlation Location 4
10/26/2016 11:20	0.0126	Correlation Location 4
10/26/2016 11:20	0.0127	Correlation Location 4
10/26/2016 11:21	0.0128	Correlation Location 4
10/26/2016 11:21	0.013	Correlation Location 4
10/26/2016 11:21	0.0129	Correlation Location 4
10/26/2016 11:21	0.0126	Correlation Location 4
10/26/2016 11:21	0.0127	Correlation Location 4
10/26/2016 11:21	0.0128	Correlation Location 4
10/26/2016 11:21	0.0128	Correlation Location 4
10/26/2016 11:21	0.0127	Correlation Location 4
10/26/2016 11:21	0.0128	Correlation Location 4
10/26/2016 11:21	0.0129	Correlation Location 4
10/26/2016 11:22	0.0129	Correlation Location 4
10/26/2016 11:22	0.0126	Correlation Location 4
10/26/2016 11:22	0.0127	Correlation Location 4
10/26/2016 11:22	0.0129	Correlation Location 4
10/26/2016 11:22	0.0128	Correlation Location 4
10/26/2016 11:22	0.0129	Correlation Location 4
10/26/2016 11:22	0.0131	Correlation Location 4
10/26/2016 11:22	0.0131	Correlation Location 4
10/26/2016 11:22	0.0132	Correlation Location 4
10/26/2016 11:22	0.0133	Correlation Location 4
10/26/2016 11:23	0.0131	Correlation Location 4
10/26/2016 11:23	0.013	Correlation Location 4
10/26/2016 11:23	0.0131	Correlation Location 4
10/26/2016 11:23	0.0128	Correlation Location 4
10/26/2016 11:23	0.0127	Correlation Location 4
10/26/2016 11:23	0.0126	Correlation Location 4
10/26/2016 11:23	0.0122	Correlation Location 4
10/26/2016 11:23	0.0122	Correlation Location 4
10/26/2016 11:23	0.0122	Correlation Location 4
10/26/2016 11:23	0.0121	Correlation Location 4
10/26/2016 11:24	0.0122	Correlation Location 4
10/26/2016 11:24	0.0122	Correlation Location 4
10/26/2016 11:24	0.0121	Correlation Location 4
10/26/2016 11:24	0.0121	Correlation Location 4
10/26/2016 11:51	0.0533	Correlation Location 5
10/26/2016 11:51	0.0929	Correlation Location 5
10/26/2016 11:51	0.0803	Correlation Location 5
10/26/2016 11:52	0.0544	Correlation Location 5
10/26/2016 11:52	0.0357	Correlation Location 5
10/26/2016 11:52	0.0239	Correlation Location 5
10/26/2016 11:52	0.0174	Correlation Location 5
10/26/2016 11:52	0.014	Correlation Location 5
10/26/2016 11:52	0.0121	Correlation Location 5
10/26/2016 11:52	0.0116	Correlation Location 5
10/26/2016 11:52	0.0115	Correlation Location 5
10/26/2016 11:52	0.0114	Correlation Location 5
10/26/2016 11:52	0.0117	Correlation Location 5

Date and Time	Exposure Rate (mR/h)	Location
10/26/2016 11:53	0.012	Correlation Location 5
10/26/2016 11:53	0.0117	Correlation Location 5
10/26/2016 11:53	0.0117	Correlation Location 5
10/26/2016 11:53	0.0122	Correlation Location 5
10/26/2016 11:53	0.0122	Correlation Location 5
10/26/2016 11:53	0.012	Correlation Location 5
10/26/2016 11:53	0.0115	Correlation Location 5
10/26/2016 11:53	0.0111	Correlation Location 5
10/26/2016 11:53	0.011	Correlation Location 5
10/26/2016 11:53	0.0111	Correlation Location 5
10/26/2016 11:54	0.0112	Correlation Location 5
10/26/2016 11:54	0.011	Correlation Location 5
10/26/2016 11:54	0.0105	Correlation Location 5
10/26/2016 11:54	0.0102	Correlation Location 5
10/26/2016 11:54	0.01	Correlation Location 5
10/26/2016 11:54	0.0104	Correlation Location 5
10/26/2016 11:54	0.0108	Correlation Location 5
10/26/2016 11:54	0.0111	Correlation Location 5
10/26/2016 11:54	0.0112	Correlation Location 5
10/26/2016 11:54	0.0111	Correlation Location 5
10/26/2016 11:55	0.0111	Correlation Location 5
10/26/2016 11:55	0.0111	Correlation Location 5
10/26/2016 11:55	0.0108	Correlation Location 5
10/26/2016 11:55	0.0106	Correlation Location 5
10/26/2016 11:55	0.0108	Correlation Location 5
10/26/2016 11:55	0.0108	Correlation Location 5
10/26/2016 11:55	0.0105	Correlation Location 5
10/26/2016 11:55	0.0104	Correlation Location 5
10/26/2016 11:55	0.0105	Correlation Location 5
10/26/2016 11:55	0.0109	Correlation Location 5
10/26/2016 11:56	0.0111	Correlation Location 5
10/26/2016 11:56	0.0112	Correlation Location 5
10/26/2016 11:56	0.0111	Correlation Location 5
10/26/2016 11:56	0.0112	Correlation Location 5
10/26/2016 11:56	0.0111	Correlation Location 5
10/26/2016 11:56	0.0108	Correlation Location 5
10/26/2016 11:56	0.0108	Correlation Location 5
10/26/2016 11:56	0.0108	Correlation Location 5
10/26/2016 11:56	0.0109	Correlation Location 5
10/26/2016 11:56	0.0108	Correlation Location 5
10/26/2016 11:57	0.011	Correlation Location 5
10/26/2016 11:57	0.011	Correlation Location 5
10/26/2016 11:57	0.011	Correlation Location 5
10/26/2016 11:57	0.0111	Correlation Location 5
10/26/2016 11:57	0.0114	Correlation Location 5
10/26/2016 11:57	0.0116	Correlation Location 5
10/26/2016 11:57	0.0114	Correlation Location 5
10/26/2016 11:57	0.011	Correlation Location 5
10/26/2016 11:57	0.0108	Correlation Location 5
10/26/2016 11:57	0.0106	Correlation Location 5
10/26/2016 11:58	0.0108	Correlation Location 5
10/26/2016 11:58	0.0109	Correlation Location 5
10/26/2016 11:58	0.011	Correlation Location 5
10/26/2016 11:58	0.011	Correlation Location 5
10/26/2016 11:58	0.0109	Correlation Location 5
10/26/2016 11:58	0.0106	Correlation Location 5
10/26/2016 11:58	0.0109	Correlation Location 5
10/26/2016 11:58	0.011	Correlation Location 5
10/26/2016 11:58	0.0106	Correlation Location 5
10/26/2016 11:58	0.0105	Correlation Location 5
10/26/2016 11:59	0.0111	Correlation Location 5
10/26/2016 11:59	0.0114	Correlation Location 5
10/26/2016 11:59	0.011	Correlation Location 5
10/26/2016 11:59	0.0108	Correlation Location 5
10/26/2016 11:59	0.011	Correlation Location 5
10/26/2016 11:59	0.0111	Correlation Location 5
10/26/2016 11:59	0.0112	Correlation Location 5
10/26/2016 11:59	0.0114	Correlation Location 5
10/26/2016 11:59	0.0112	Correlation Location 5
10/26/2016 11:59	0.011	Correlation Location 5
10/26/2016 12:00	0.0109	Correlation Location 5
10/26/2016 12:00	0.0108	Correlation Location 5
10/26/2016 12:00	0.0105	Correlation Location 5
10/26/2016 12:00	0.0109	Correlation Location 5
10/26/2016 12:00	0.0108	Correlation Location 5
10/26/2016 12:00	0.011	Correlation Location 5
10/26/2016 12:00	0.0111	Correlation Location 5
10/26/2016 12:00	0.011	Correlation Location 5
10/26/2016 12:00	0.0108	Correlation Location 5
10/26/2016 12:00	0.0109	Correlation Location 5
10/26/2016 12:01	0.0109	Correlation Location 5
10/26/2016 12:01	0.0109	Correlation Location 5
10/26/2016 12:01	0.011	Correlation Location 5
10/26/2016 12:01	0.0112	Correlation Location 5
10/26/2016 12:01	0.0114	Correlation Location 5
10/26/2016 12:01	0.0112	Correlation Location 5
10/26/2016 12:01	0.0111	Correlation Location 5
10/26/2016 12:01	0.0109	Correlation Location 5
10/26/2016 12:01	0.0108	Correlation Location 5
10/26/2016 12:01	0.011	Correlation Location 5

Date and Time	Exposure Rate (mR/h)	Location
10/26/2016 12:02	0.0109	Correlation Location 5
10/26/2016 12:02	0.0109	Correlation Location 5
10/26/2016 12:02	0.0112	Correlation Location 5
10/26/2016 12:02	0.0112	Correlation Location 5
10/26/2016 12:02	0.0108	Correlation Location 5
10/26/2016 12:02	0.0105	Correlation Location 5

Appendix B Site Photographs

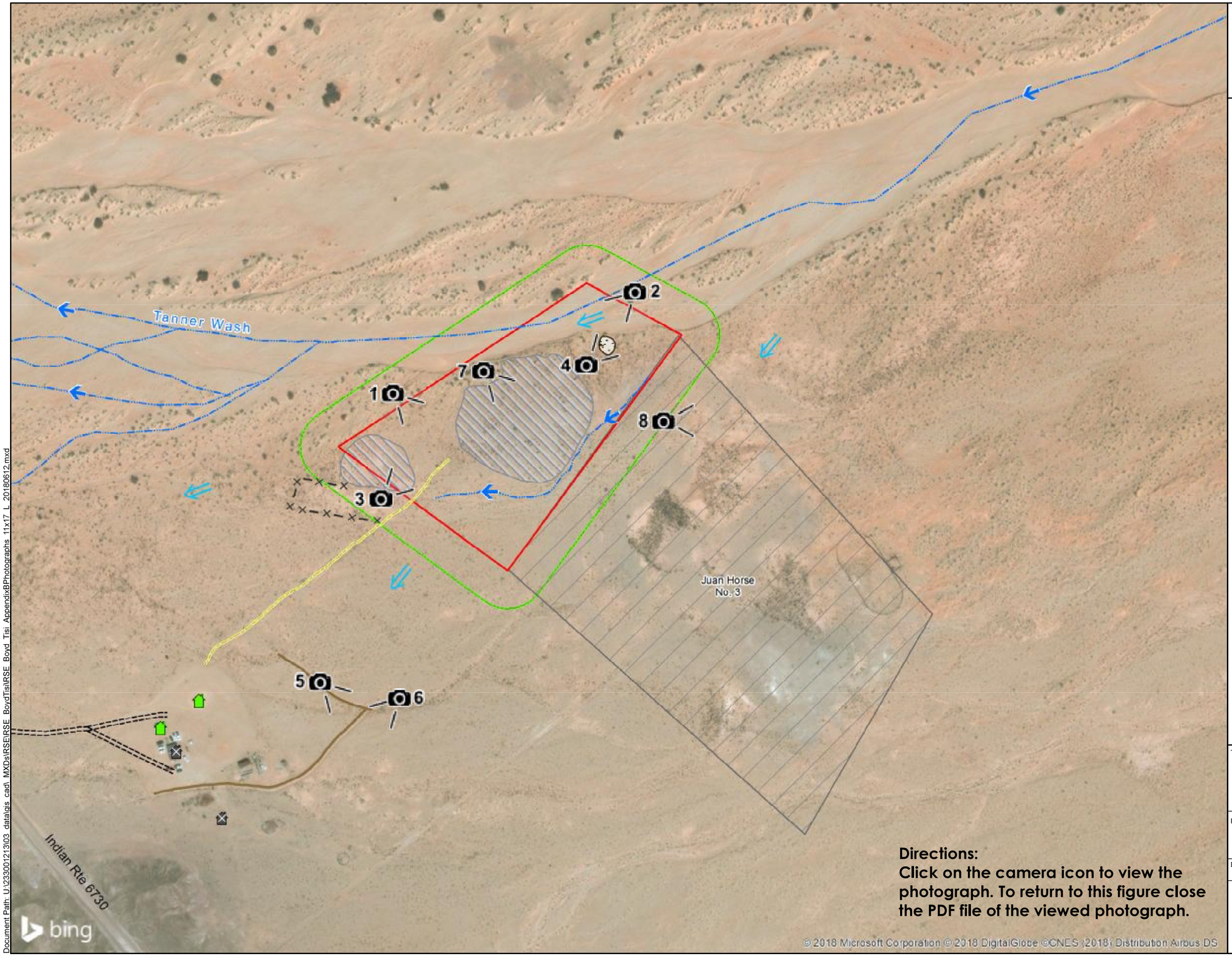

Directions:
Click on the camera icon to view the photograph. To return to this figure close the PDF file of the viewed photograph.

NAVAJO NATION
AUM Environmental Response Trust-First Phase

LEGEND

- Photograph Indicating Direction Taken
- Habitable Building
- Uninhabitable Building
- Flow Direction
- Approximate Overland Water Flow Direction
- Berm
- Drainage
- Fence
- Potential Haul Road
- Road
- Debris
- Reclaimed
- Claim Boundary
- 100-Foot Claim Buffer
- Other Claim Boundary

REFERENCES:
Coordinate System: NAD 1983 UTM Zone 12N

Basemap image accessed from BING Maps imagery web mapping service (http://www.bing.com/maps) on 06/2018.

N W E S

0 250 500
Feet

TITLE:
Site Photographs

PROJECT:
Removal Site Evaluation
Boyd Tisi No. 2 Mine Site

DATE: 6/18/2018

DOCUMENT NAME: Removal Site Evaluation Report

AUTHOR: CBB

REVIEWER: EDZ

Stantec

FIGURE: Appendix B

Document Path: U:\233001213\03_data\gis_cad_MXDs\RSE\RSE_BoydTisiIRSE_Boyd_Tisi_AppendixBPhotographs_11x17_L_20180612.mxd

Appendix C Field Activity Forms

C.1 Soil Sample Field Forms

C.2 Drilling and Hand Auger Borehole Logs

C.1 Soil Sample Field Forms

SURFACE SOIL SAMPLE LOG FORM

AREA #/NAME: SI35-BG1-001 (Boyd Tisi)

SAMPLE I.D.: SI35-BG1-001

SAMPLE COLLECTION DATE: 10/24/16

SAMPLE COLLECTION TIME: 0955

SAMPLE COLLECTED BY: C. Lee

WEATHER CONDITIONS: 70's, Cloudy

FIELD USCS DESCRIPTIONS: Red fine sand

MAJOR DIVISIONS: ☐ OH ☐ CH ☐ MH ☐ OH ☐ CL ☐ ML ☐ SC
☒ SM ☐ SP ☐ SW ☐ GC ☐ GM ☐ GP ☐ GW

QUALIFIERS: ☐ TRACE ☐ MINOR ☐ SOME; SAND SIZE ☐ FINE ☐ MEDIUM ☐ COARSE

MOISTURE: ☒ DRY ☐ MOIST ☐ WET

SAMPLE CONTAINERS (NUMBER AND TYPE): 1 Ziplock

ANALYSES: Ra-226, Metals

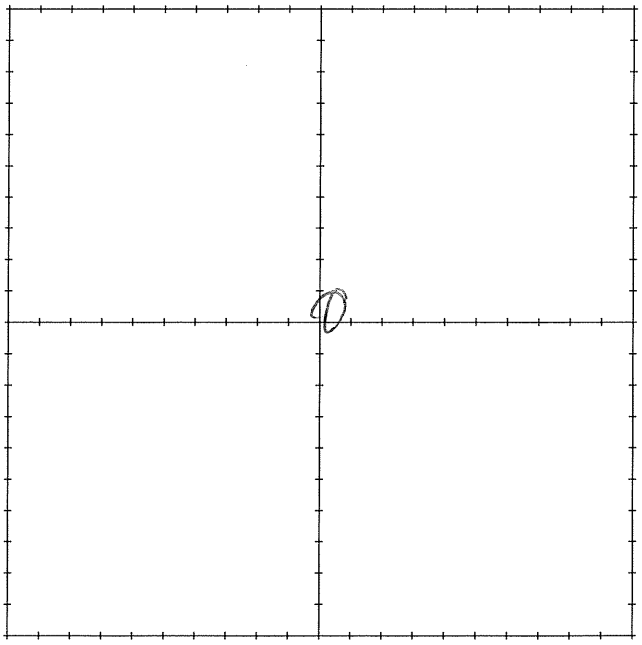

MARK INDIVIDUAL GRAB SAMPLE LOCATIONS IN GRID

SURFACE SOIL SAMPLE LOG FORM

AREA #/NAME S135-BG1-001 (Boyd Tisi)

SAMPLE I.D. S135-BG1-201

SAMPLE COLLECTION DATE 10/24/2016

SAMPLE COLLECTION TIME 0855

SAMPLE COLLECTED BY C. Lee

WEATHER CONDITIONS 70s, Cloudy

FIELD USCS DESCRIPTIONS Fine red sand

MAJOR DIVISIONS: ❑ OH ❑ CH ❑ MH ❑ OH ❑ CL ❑ ML ❑ SC
❑ SM ☒ SP ❑ SW ❑ GC ❑ GM ❑ GP ❑ GW

QUALIFIERS: ☒ TRACE ❑ MINOR ❑ SOME; SAND SIZE ❑ FINE ❑ MEDIUM ❑ COARSE

MOISTURE: ☒ DRY ❑ MOIST ❑ WET

SAMPLE CONTAINERS (NUMBER AND TYPE) 1 Ziplock

ANALYSES: Ra-226, Metals

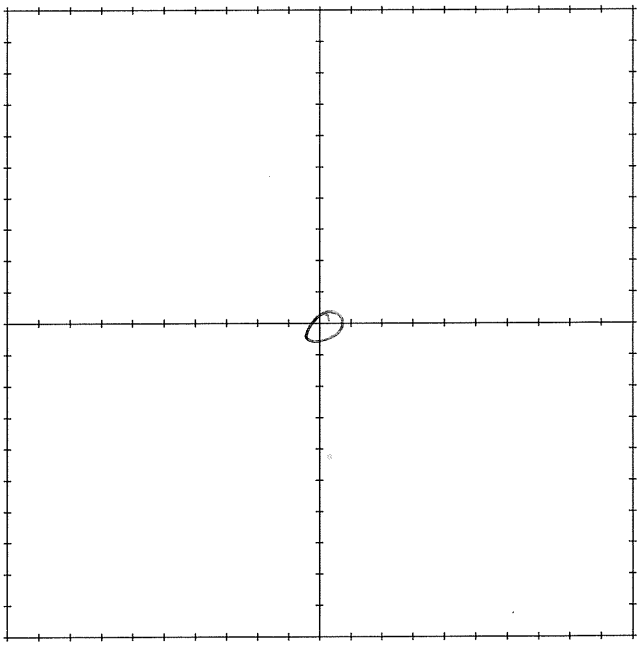

MARK INDIVIDUAL GRAB SAMPLE LOCATIONS IN GRID

SURFACE SOIL SAMPLE LOG FORM

AREA #/NAME S135-BG1-002

SAMPLE I.D. S135-BG1-002

SAMPLE COLLECTION DATE 10/24/2016

SAMPLE COLLECTION TIME 0910

SAMPLE COLLECTED BY C. Lee

WEATHER CONDITIONS 70s, Cloudy

FIELD USCS DESCRIPTIONS Red fine sand

MAJOR DIVISIONS: ☐ OH ☐ CH ☐ MH ☐ OH ☐ CL ☐ ML ☐ SC
☐ SM ☒ SP ☐ SW ☐ GC ☐ GM ☐ GP ☐ GW

QUALIFIERS: ☒ TRACE ☐ MINOR ☐ SOME; SAND SIZE ☐ FINE ☐ MEDIUM ☐ COARSE

MOISTURE: ☒ DRY ☐ MOIST ☐ WET

SAMPLE CONTAINERS (NUMBER AND TYPE) 1 Ziploc

ANALYSES: Ra-226, Metals

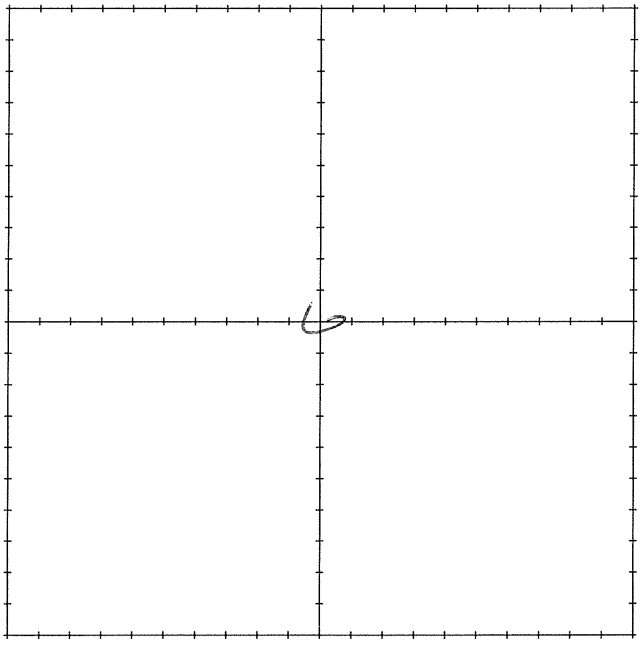

MARK INDIVIDUAL GRAB SAMPLE LOCATIONS IN GRID

SURFACE SOIL SAMPLE LOG FORM

AREA #/NAME: SI35-BG1-003

SAMPLE I.D.: SI35-BG1-003

SAMPLE COLLECTION DATE: 10/24/2016

SAMPLE COLLECTION TIME: 0920

SAMPLE COLLECTED BY: C Lee

WEATHER CONDITIONS: 70s, Cloudy

FIELD USCS DESCRIPTIONS: fine red sand

MAJOR DIVISIONS: ☐ OH ☐ CH ☐ MH ☐ OH ☐ CL ☐ ML ☐ SC
☐ SM ☒ SP ☐ SW ☐ GC ☐ GM ☐ GP ☐ GW

QUALIFIERS: ☒ TRACE ☐ MINOR ☐ SOME; SAND SIZE ☐ FINE ☐ MEDIUM ☐ COARSE

MOISTURE: ☒ DRY ☐ MOIST ☐ WET

SAMPLE CONTAINERS (NUMBER AND TYPE): 1 Ziplock

ANALYSES: PG-226, Metals

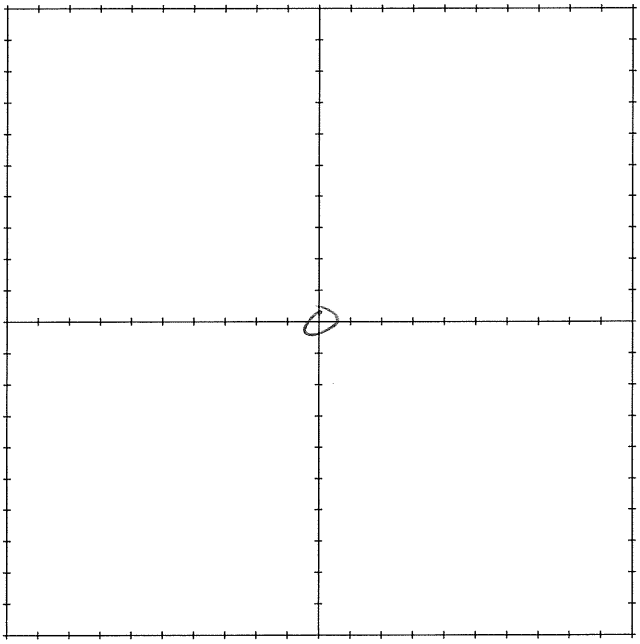

MARK INDIVIDUAL GRAB SAMPLE LOCATIONS IN GRID

SURFACE SOIL SAMPLE LOG FORM

AREA #/NAME 5135-BG1-004

SAMPLE I.D. 5135-BG1-004

SAMPLE COLLECTION DATE 10/24/2012

SAMPLE COLLECTION TIME ~~1111~~ 0930

SAMPLE COLLECTED BY C. Lee

WEATHER CONDITIONS 70's Cloudy

FIELD USCS DESCRIPTIONS Fine red Sand

MAJOR DIVISIONS: ☐ OH ☐ CH ☐ MH ☐ OH ☐ CL ☐ ML ☐ SC
☐ SM ☒ SP ☐ SW ☐ GC ☐ GM ☐ GP ☐ GW

QUALIFIERS: ☒ TRACE ☐ MINOR ☐ SOME; SAND SIZE ☐ FINE ☐ MEDIUM ☐ COARSE

MOISTURE: ☒ DRY ☐ MOIST ☐ WET

SAMPLE CONTAINERS (NUMBER AND TYPE) 1 Ziplock

ANALYSES: Ra-226, Metals

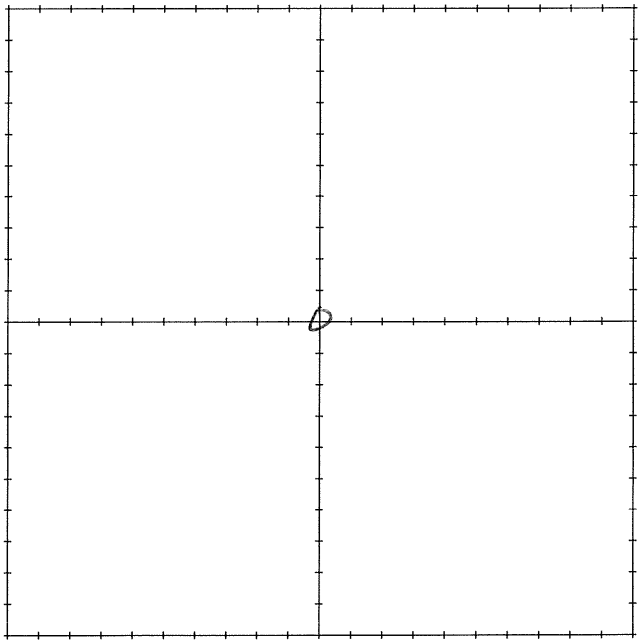

MARK INDIVIDUAL GRAB SAMPLE LOCATIONS IN GRID

SURFACE SOIL SAMPLE LOG FORM

AREA #/NAME S135-BG1-005

SAMPLE I.D. S135-BG1-005

SAMPLE COLLECTION DATE 10/24/2016

SAMPLE COLLECTION TIME 0940

SAMPLE COLLECTED BY C. Lee

WEATHER CONDITIONS 70s Cloudy

FIELD USCS DESCRIPTIONS Fine red sand

MAJOR DIVISIONS: ☐ OH ☐ CH ☐ MH ☐ OH ☐ CL ☐ ML ☐ SC
☐ SM ☒ SP ☐ SW ☐ GC ☐ GM ☐ GP ☐ GW

QUALIFIERS: ☒ TRACE ☐ MINOR ☐ SOME; SAND SIZE ☐ FINE ☐ MEDIUM ☐ COARSE

MOISTURE: ☒ DRY ☐ MOIST ☐ WET

SAMPLE CONTAINERS (NUMBER AND TYPE) 1 Ziplock

ANALYSES: Ra-226, Metals

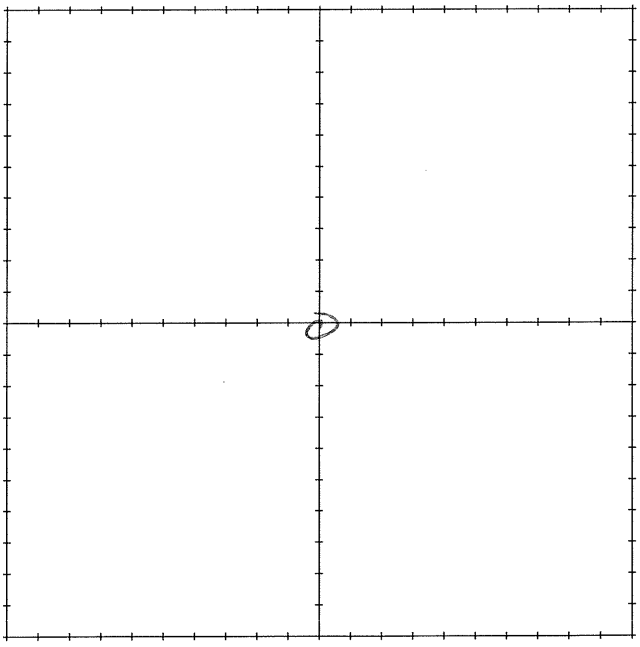

MARK INDIVIDUAL GRAB SAMPLE LOCATIONS IN GRID

SURFACE SOIL SAMPLE LOG FORM

AREA #/NAME 5135-BG1-006

SAMPLE I.D. 5135-BG1-006

SAMPLE COLLECTION DATE 10/24/2016

SAMPLE COLLECTION TIME 0950

SAMPLE COLLECTED BY C Lee

WEATHER CONDITIONS 70's Cloudy

FIELD USCS DESCRIPTIONS Fine red sand

MAJOR DIVISIONS: ☐ OH ☐ CH ☐ MH ☐ OH ☐ CL ☐ ML ☐ SC
☐ SM ☒ SP ☐ SW ☐ GC ☐ GM ☐ GP ☐ GW

QUALIFIERS: ☒ TRACE ☐ MINOR ☐ SOME; SAND SIZE ☐ FINE ☐ MEDIUM ☐ COARSE

MOISTURE: ☒ DRY ☐ MOIST ☐ WET

SAMPLE CONTAINERS (NUMBER AND TYPE) 1 Ziplock

ANALYSES: Ra-226, Metals

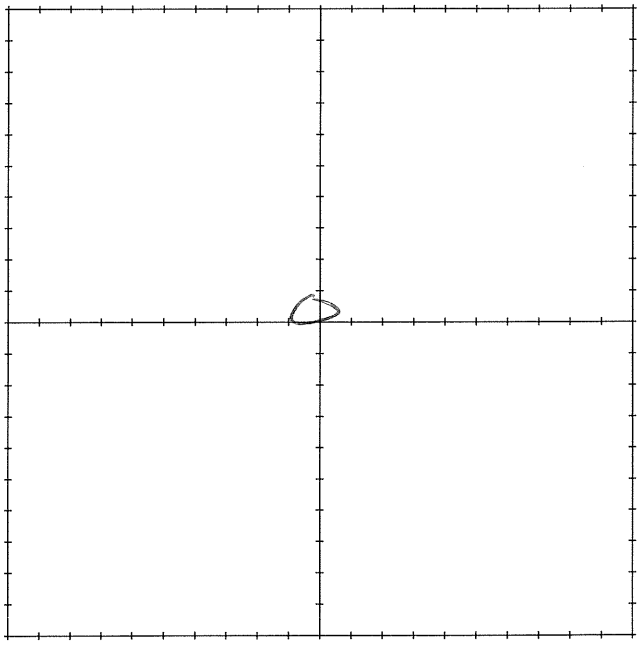

MARK INDIVIDUAL GRAB SAMPLE LOCATIONS IN GRID

SURFACE SOIL SAMPLE LOG FORM

AREA #/NAME: S135-BG1-007

SAMPLE I.D.: S135-BG1-007

SAMPLE COLLECTION DATE: 10/24/2016

SAMPLE COLLECTION TIME: 0955

SAMPLE COLLECTED BY: C. Lee

WEATHER CONDITIONS: 70s Cloudy

FIELD USCS DESCRIPTIONS: Fine Red Sand

MAJOR DIVISIONS: ☐ OH ☐ CH ☐ MH ☐ OH ☐ CL ☐ ML ☐ SC
☐ SM ☒ SP ☐ SW ☐ GC ☐ GM ☐ GP ☐ GW

QUALIFIERS: ☒ TRACE ☐ MINOR ☐ SOME; SAND SIZE ☐ FINE ☐ MEDIUM ☐ COARSE

MOISTURE: ☒ DRY ☐ MOIST ☐ WET

SAMPLE CONTAINERS (NUMBER AND TYPE): 1 Ziplock

ANALYSES: Ra-226, Metals

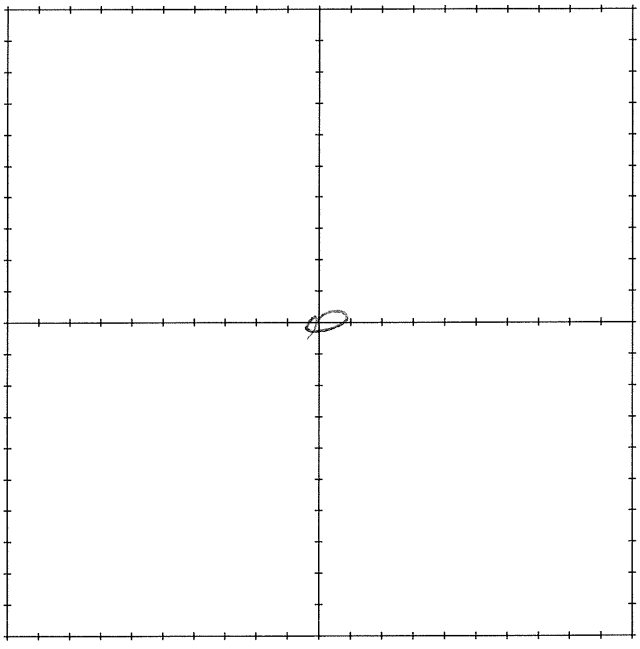

MARK INDIVIDUAL GRAB SAMPLE LOCATIONS IN GRID

SURFACE SOIL SAMPLE LOG FORM

AREA #/NAME: S135-BG1-008

SAMPLE I.D.: S135-BG1-008

SAMPLE COLLECTION DATE: 10/24/2016

SAMPLE COLLECTION TIME: 1000

SAMPLE COLLECTED BY: C. Lee

WEATHER CONDITIONS: 70s Cloudy

FIELD USCS DESCRIPTIONS: Fine red sand

MAJOR DIVISIONS: ☐ OH ☐ CH ☐ MH ☐ OH ☐ CL ☐ ML ☐ SC
☐ SM ☒ SP ☐ SW ☐ GC ☐ GM ☐ GP ☐ GW

QUALIFIERS: ☐ TRACE ☒ MINOR ☐ SOME; SAND SIZE ☐ FINE ☐ MEDIUM ☐ COARSE

MOISTURE: ☑ DRY ☐ MOIST ☐ WET

SAMPLE CONTAINERS (NUMBER AND TYPE): 1 Ziplock

ANALYSES: Ra-226, Metals

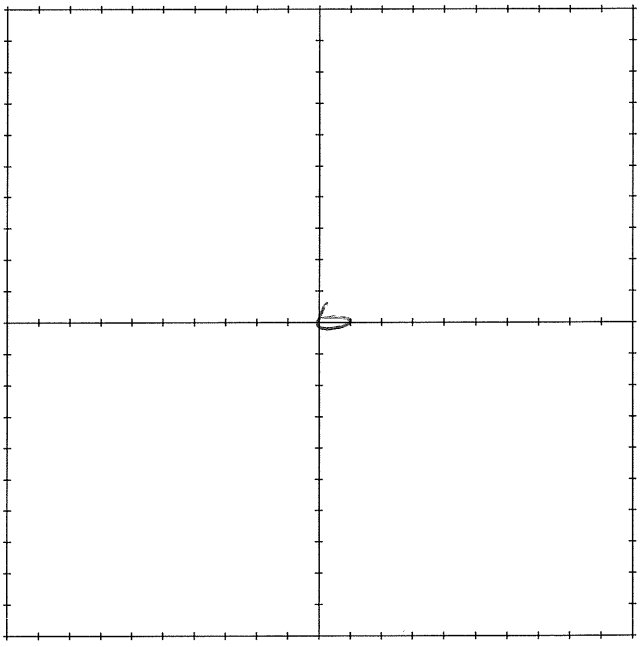

MARK INDIVIDUAL GRAB SAMPLE LOCATIONS IN GRID

SURFACE SOIL SAMPLE LOG FORM

AREA #/NAME: S135-BG1-009

SAMPLE I.D.: S135-BG1-009

SAMPLE COLLECTION DATE: 10/24/2016

SAMPLE COLLECTION TIME: 1015

SAMPLE COLLECTED BY: C. Lee

WEATHER CONDITIONS: 70s cloudy

FIELD USCS DESCRIPTIONS: Fine red sand

MAJOR DIVISIONS: ❑ OH ❑ CH ❑ MH ❑ OH ❑ CL ❑ ML ❑ SC
❑ SM ☒ SP ❑ SW ❑ GC ❑ GM ❑ GP ❑ GW

QUALIFIERS: ☒ TRACE ❑ MINOR ❑ SOME; SAND SIZE ❑ FINE ❑ MEDIUM ❑ COARSE

MOISTURE: ☒ DRY ❑ MOIST ❑ WET

SAMPLE CONTAINERS (NUMBER AND TYPE): 1 Ziplock

ANALYSES: Ra-226, metals

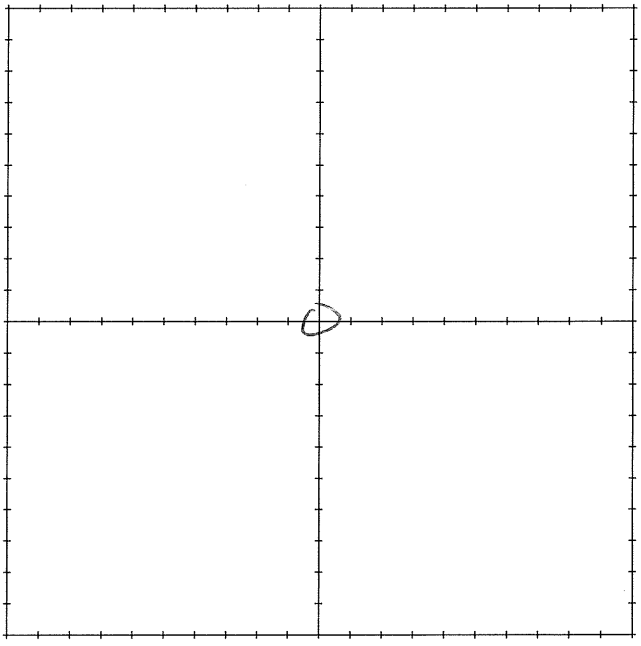

MARK INDIVIDUAL GRAB SAMPLE LOCATIONS IN GRID

SURFACE SOIL SAMPLE LOG FORM

AREA #/NAME S135-BG1-009 (Boyd Tisi)

SAMPLE I.D. S135-BG1-009 MSD

SAMPLE COLLECTION DATE 10/24/2016

SAMPLE COLLECTION TIME 1615

SAMPLE COLLECTED BY C. Lee

WEATHER CONDITIONS 70s Cloudy

FIELD USCS DESCRIPTIONS Fine red sand

MAJOR DIVISIONS: ☐ OH ☐ CH ☐ MH ☐ OH ☐ CL ☐ ML ☐ SC
☐ SM ☒ SP ☐ SW ☐ GC ☐ GM ☐ GP ☐ GW

QUALIFIERS: ☒ TRACE ☐ MINOR ☐ SOME; SAND SIZE ☐ FINE ☐ MEDIUM ☐ COARSE

MOISTURE: ☒ DRY ☐ MOIST ☐ WET

SAMPLE CONTAINERS (NUMBER AND TYPE) 1 Ziplock

ANALYSES: Ra-226, Metals

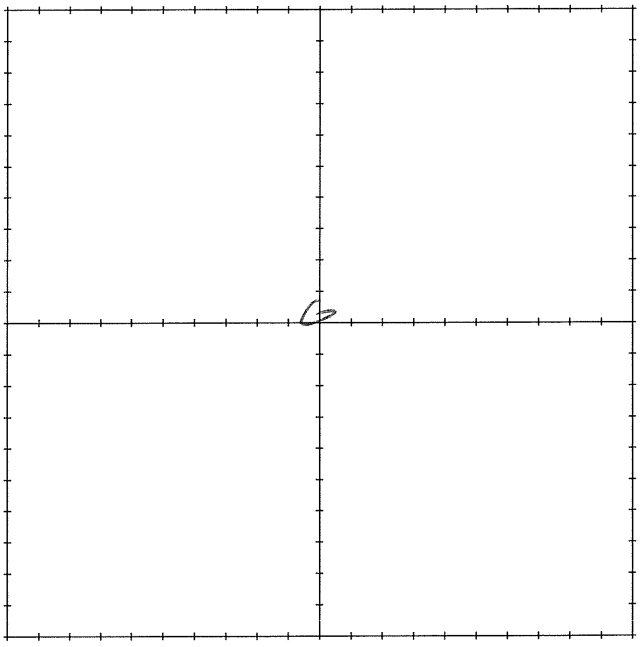

MARK INDIVIDUAL GRAB SAMPLE LOCATIONS IN GRID

SURFACE SOIL SAMPLE LOG FORM

AREA #/NAME 5135-BG1-009 (Boyd Tisi)

SAMPLE I.D. 5135-BG1-009 MS

SAMPLE COLLECTION DATE 10/24/2016

SAMPLE COLLECTION TIME 1015

SAMPLE COLLECTED BY C. Lee

WEATHER CONDITIONS 70 Cloudy

FIELD USCS DESCRIPTIONS Red fine sand

MAJOR DIVISIONS: ☐ OH ☐ CH ☐ MH ☐ OH ☐ CL ☐ ML ☐ SC
☐ SM ☑ SP ☐ SW ☐ GC ☐ GM ☐ GP ☐ GW

QUALIFIERS: ☑ TRACE ☐ MINOR ☐ SOME; SAND SIZE ☐ FINE ☐ MEDIUM ☐ COARSE

MOISTURE: ☑ DRY ☐ MOIST ☐ WET

SAMPLE CONTAINERS (NUMBER AND TYPE) 1 Ziplock

ANALYSES: Ra-226, Metals

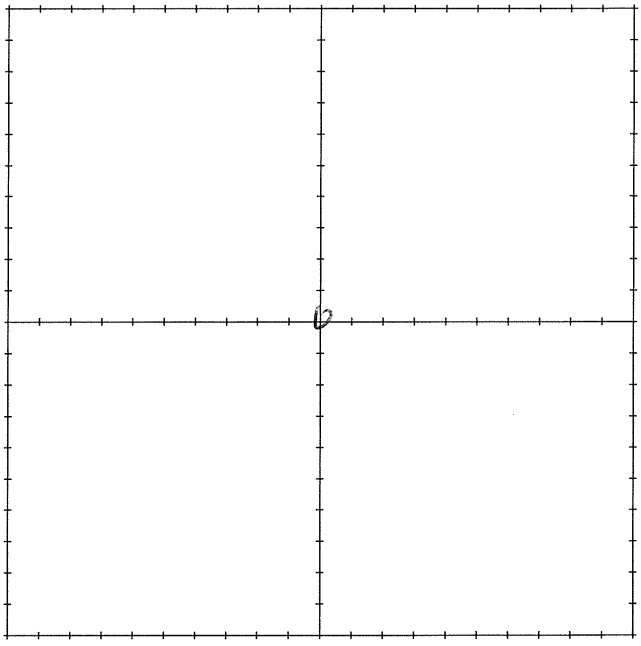

MARK INDIVIDUAL GRAB SAMPLE LOCATIONS IN GRID

SURFACE SOIL SAMPLE LOG FORM

AREA #/NAME S135-BG1-010 (Boyd Tisi)

SAMPLE I.D. S135-BG1-010

SAMPLE COLLECTION DATE 10/24/2016

SAMPLE COLLECTION TIME 1030

SAMPLE COLLECTED BY C. Lee

WEATHER CONDITIONS 70s Cloudy

FIELD USCS DESCRIPTIONS Fine red sand

MAJOR DIVISIONS: ❑ OH ❑ CH ❑ MH ❑ OH ❑ CL ❑ ML ❑ SC
❑ SM ☒ SP ❑ SW ❑ GC ❑ GM ❑ GP ❑ GW

QUALIFIERS: ☒ TRACE ❑ MINOR ❑ SOME; SAND SIZE ❑ FINE ❑ MEDIUM ❑ COARSE

MOISTURE: ☒ DRY ❑ MOIST ❑ WET

SAMPLE CONTAINERS (NUMBER AND TYPE) 1 Ziplock

ANALYSES: Ra-226, Metals

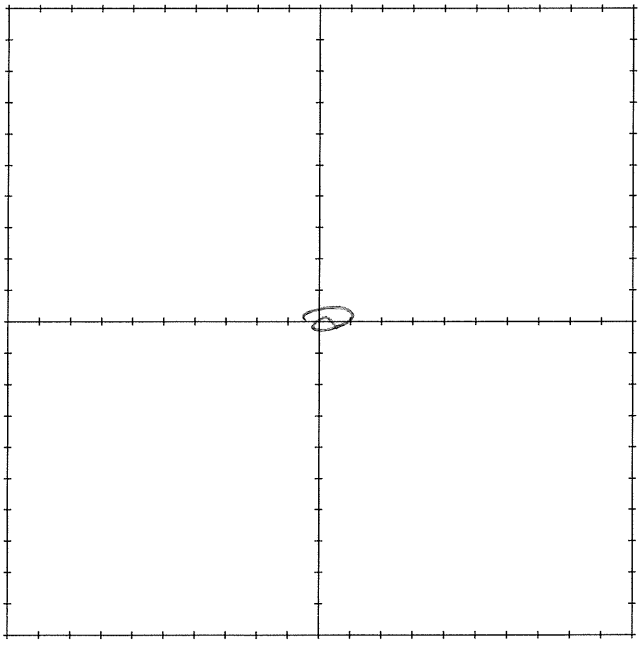

MARK INDIVIDUAL GRAB SAMPLE LOCATIONS IN GRID

SURFACE SOIL SAMPLE LOG FORM

AREA #/NAME SS35-BG2-001 (Boyd Trail)

SAMPLE I.D. SS35-BG2-001

SAMPLE COLLECTION DATE 10/24/16

SAMPLE COLLECTION TIME 1130

SAMPLE COLLECTED BY C Lee

WEATHER CONDITIONS 60s cloudy

FIELD USCS DESCRIPTIONS Fine tan sand

MAJOR DIVISIONS: ☐ OH ☐ CH ☐ MH ☐ OH ☐ CL ☐ ML ☐ SC
☐ SM ☒ SP ☐ SW ☐ GC ☐ GM ☐ GP ☐ GW

QUALIFIERS: ☐ TRACE ☐ MINOR ☐ SOME; SAND SIZE ☒ FINE ☐ MEDIUM ☐ COARSE

MOISTURE: ☒ DRY ☐ MOIST ☐ WET

SAMPLE CONTAINERS (NUMBER AND TYPE) 1 - ziplock

ANALYSES: Ra-226, Metals

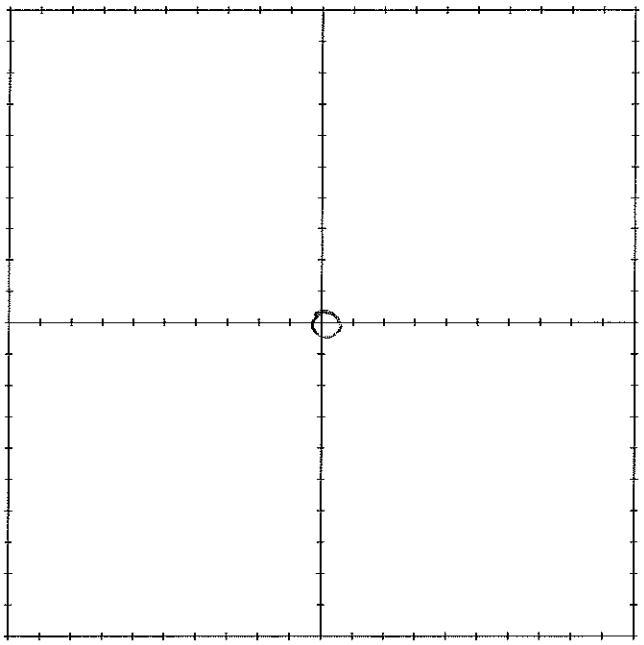

MARK INDIVIDUAL GRAB SAMPLE LOCATIONS IN GRID

SURFACE SOIL SAMPLE LOG FORM

AREA #/NAME 5135-B02-001 (Bald Tisi)

SAMPLE I.D. 5135-B02-201

SAMPLE COLLECTION DATE 10/24/16

SAMPLE COLLECTION TIME 1132

SAMPLE COLLECTED BY C Lee

WEATHER CONDITIONS 60's, cloudy

FIELD USCS DESCRIPTIONS Fine tan sand

MAJOR DIVISIONS: ☐ OH ☐ CH ☐ MH ☐ OH ☐ CL ☐ ML ☐ SC
☐ SM ☒ SP ☐ SW ☐ GC ☐ GM ☐ GP ☐ GW

QUALIFIERS: ☐ TRACE ☐ MINOR ☐ SOME; SAND SIZE ☒ FINE ☐ MEDIUM ☐ COARSE

MOISTURE: ☒ DRY ☐ MOIST ☐ WET

SAMPLE CONTAINERS (NUMBER AND TYPE) 1 ziploc

ANALYSES: Ra-226, Metals

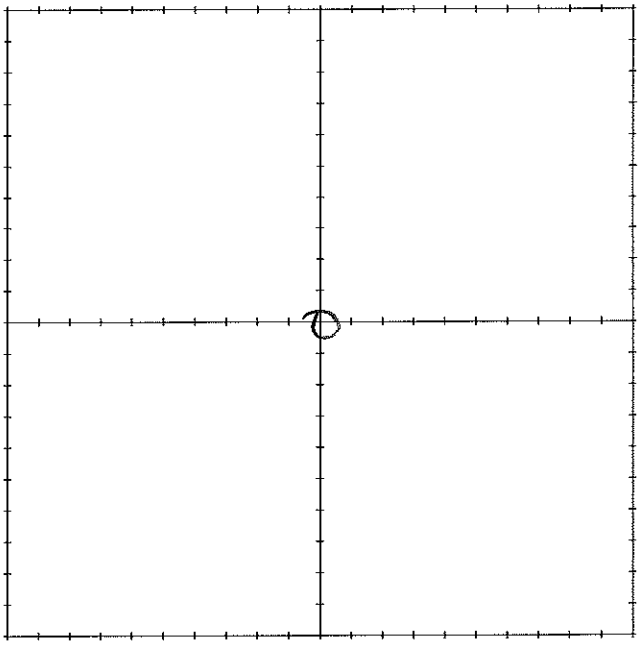

MARK INDIVIDUAL GRAB SAMPLE LOCATIONS IN GRID

SURFACE SOIL SAMPLE LOG FORM

AREA #/NAME S135-B02-002 (Bond Tisi)

SAMPLE I.D. S135-B02-002

SAMPLE COLLECTION DATE 10/24/16

SAMPLE COLLECTION TIME 1242

SAMPLE COLLECTED BY Chris

WEATHER CONDITIONS 60's, cloudy

FIELD USCS DESCRIPTIONS Fine w/ (ten sand)

MAJOR DIVISIONS: ☐ OH ☐ CH ☐ MH ☐ OH ☐ CL ☐ ML ☐ SC
☐ SM ☒ SP ☐ SW ☐ GC ☐ GM ☐ GP ☐ GW

QUALIFIERS: ☐ TRACE ☐ MINOR ☐ SOME; SAND SIZE ☒ FINE ☐ MEDIUM ☐ COARSE

MOISTURE: ☒ DRY ☐ MOIST ☐ WET

SAMPLE CONTAINERS (NUMBER AND TYPE) 1 ziploc

ANALYSES: Ra-226, Metals

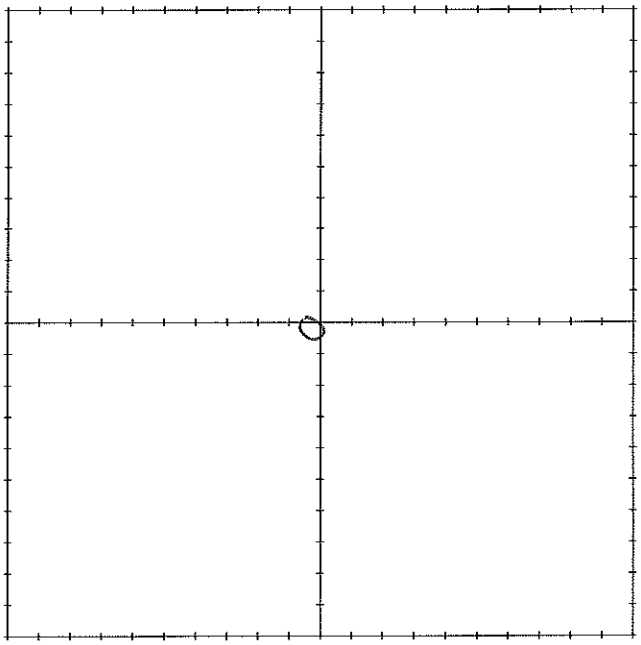

MARK INDIVIDUAL GRAB SAMPLE LOCATIONS IN GRID

SURFACE SOIL SAMPLE LOG FORM

AREA #/NAME S135-BG2-003 (Boyd Tisi)

SAMPLE I.D. S135-BG2-003

SAMPLE COLLECTION DATE 10/24/16

SAMPLE COLLECTION TIME 1146

SAMPLE COLLECTED BY L. Lee

WEATHER CONDITIONS 60's cloudy

FIELD USCS DESCRIPTIONS Fine Red/Tan Sand

MAJOR DIVISIONS: ☐ OH ☐ CH ☐ MH ☐ OH ☐ CL ☐ ML ☐ SC
☐ SM ☒ SP ☐ SW ☐ GC ☐ GM ☐ GP ☐ GW

QUALIFIERS: ☐ TRACE ☐ MINOR ☐ SOME; SAND SIZE ☒ FINE ☐ MEDIUM ☐ COARSE

MOISTURE: ☒ DRY ☐ MOIST ☐ WET

SAMPLE CONTAINERS (NUMBER AND TYPE) 1 ziplock

ANALYSES: Ra-226, Metals

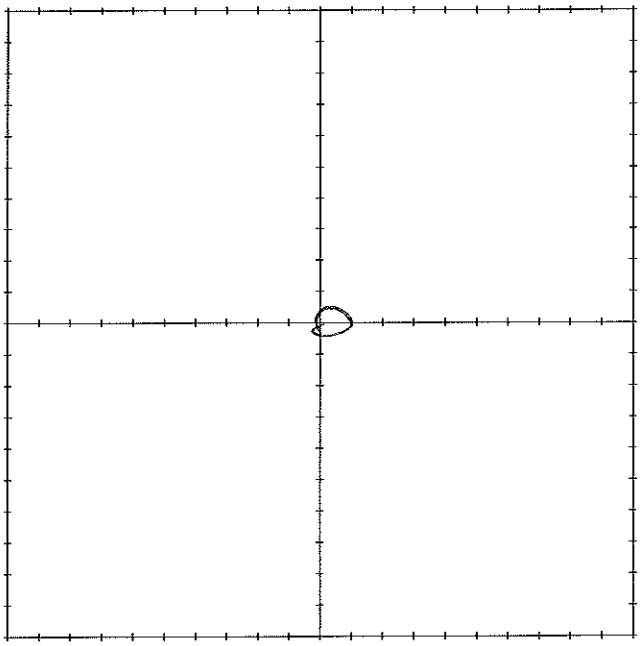

MARK INDIVIDUAL GRAB SAMPLE LOCATIONS IN GRID

SURFACE SOIL SAMPLE LOG FORM

AREA #/NAME: S135-B02-004 (Bx & Tri)

SAMPLE I.D.: S135-B02-004

SAMPLE COLLECTION DATE: 10/24/16

SAMPLE COLLECTION TIME: 1156

SAMPLE COLLECTED BY: C. Lee

WEATHER CONDITIONS: 60's cloudy

FIELD USCS DESCRIPTIONS: Fine Tan/wh sand

MAJOR DIVISIONS: ☐ OH ☐ CH ☐ MH ☐ OH ☐ CL ☐ ML ☐ SC
☐ SM ☒ SP ☐ SW ☐ GC ☐ GM ☐ GP ☐ GW

QUALIFIERS: ☐ TRACE ☐ MINOR ☐ SOME; SAND SIZE ☑ FINE ☐ MEDIUM ☐ COARSE

MOISTURE: ☑ DRY ☐ MOIST ☐ WET

SAMPLE CONTAINERS (NUMBER AND TYPE): 1 ziploc

ANALYSES: Ra-226, Metals

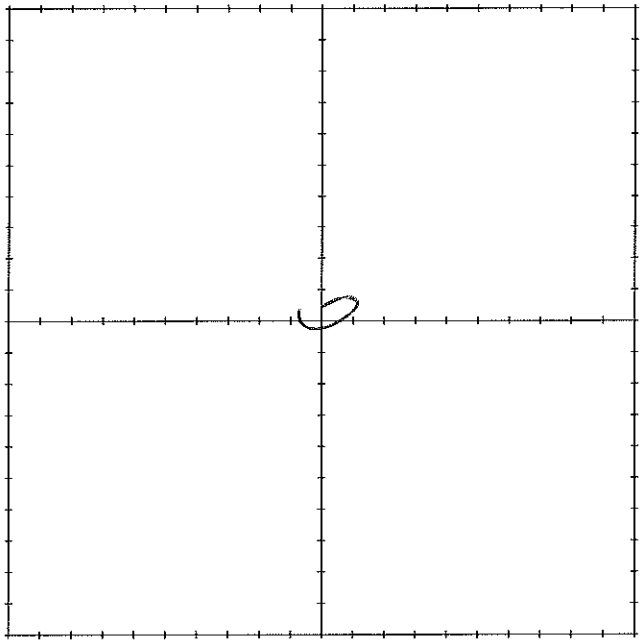

MARK INDIVIDUAL GRAB SAMPLE LOCATIONS IN GRID

SURFACE SOIL SAMPLE LOG FORM

AREA #/NAME SB5 - Bg2-005 (Bay Trail)

SAMPLE I.D. SB5 - Bg2 - 005

SAMPLE COLLECTION DATE 10/24/16

SAMPLE COLLECTION TIME 1200

SAMPLE COLLECTED BY C. Lee

WEATHER CONDITIONS 60's, cloudy

FIELD USCS DESCRIPTIONS Fine tan/red sand

MAJOR DIVISIONS: ☐ OH ☐ CH ☐ MH ☐ OH ☐ CL ☐ ML ☐ SC
☐ SM ☒ SP ☐ SW ☐ GC ☐ GM ☐ GP ☐ GW

QUALIFIERS: ☐ TRACE ☐ MINOR ☐ SOME; SAND SIZE ☒ FINE ☐ MEDIUM ☐ COARSE

MOISTURE: ☒ DRY ☐ MOIST ☐ WET

SAMPLE CONTAINERS (NUMBER AND TYPE) 1 ziploc

ANALYSES: Ra-226, Metals.

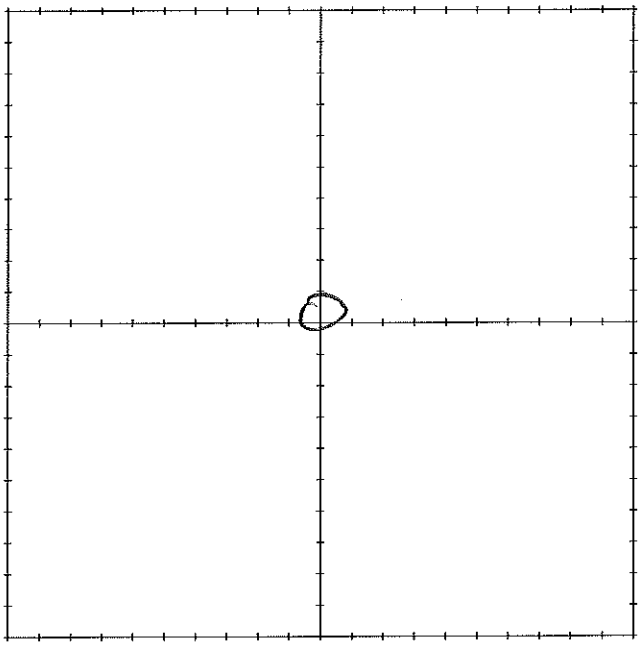

MARK INDIVIDUAL GRAB SAMPLE LOCATIONS IN GRID

SURFACE SOIL SAMPLE LOG FORM

AREA #/NAME S135-BG2-0006 (Box Trail)

SAMPLE I.D. S135-BG2-0006

SAMPLE COLLECTION DATE 10/24/10

SAMPLE COLLECTION TIME 1216

SAMPLE COLLECTED BY C. Lee

WEATHER CONDITIONS 60's cloudy

FIELD USCS DESCRIPTIONS Fine w/ trace sand

MAJOR DIVISIONS: ☐ OH ☐ CH ☐ MH ☐ OH ☐ CL ☐ ML ☐ SC
☐ SM ☒ SP ☐ SW ☐ GC ☐ GM ☐ GP ☐ GW

QUALIFIERS: ☐ TRACE ☐ MINOR ☐ SOME; SAND SIZE ☒ FINE ☐ MEDIUM ☐ COARSE

MOISTURE: ☒ DRY ☐ MOIST ☐ WET

SAMPLE CONTAINERS (NUMBER AND TYPE) 1 ziploc

ANALYSES: Ra-226 Metals

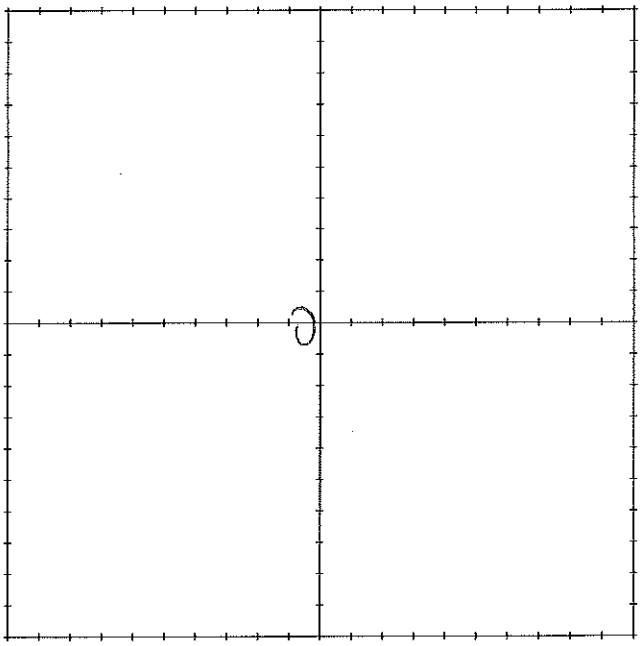

MARK INDIVIDUAL GRAB SAMPLE LOCATIONS IN GRID

SURFACE SOIL SAMPLE LOG FORM

AREA #/NAME S135-B02-007 (Boyd 702)

SAMPLE I.D. S135-B02-007

SAMPLE COLLECTION DATE 10/24/16

SAMPLE COLLECTION TIME 1226

SAMPLE COLLECTED BY [illegible]

WEATHER CONDITIONS 60's cloudy

FIELD USCS DESCRIPTIONS Fine tan/red sand

MAJOR DIVISIONS: ☐ OH ☐ CH ☐ MH ☐ OH ☐ CL ☐ ML ☐ SC
☐ SM ☒ SP ☐ SW ☐ GC ☐ GM ☐ GP ☐ GW

QUALIFIERS: ☐ TRACE ☐ MINOR ☐ SOME; SAND SIZE ☑ FINE ☐ MEDIUM ☐ COARSE

MOISTURE: ☑ DRY ☐ MOIST ☐ WET

SAMPLE CONTAINERS (NUMBER AND TYPE) 1 ziploc

ANALYSES: Rad 226, Metals

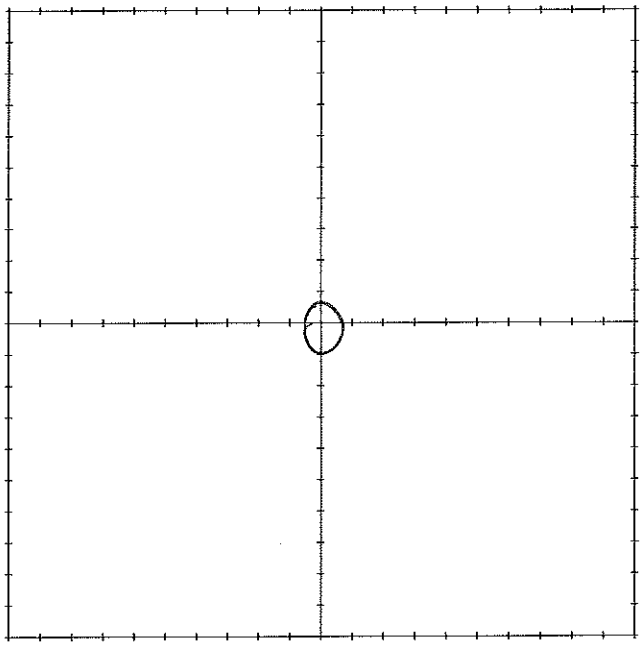

MARK INDIVIDUAL GRAB SAMPLE LOCATIONS IN GRID

SURFACE SOIL SAMPLE LOG FORM

AREA #/NAME S135-BG2-008 (Bowl-Tisi)

SAMPLE I.D. S135-BG2-008

SAMPLE COLLECTION DATE 10/24/16

SAMPLE COLLECTION TIME 1236

SAMPLE COLLECTED BY C Lee

WEATHER CONDITIONS 60's cloudy

FIELD USCS DESCRIPTIONS Fine med/fair sand

MAJOR DIVISIONS: ☐ OH ☐ CH ☐ MH ☐ OH ☐ CL ☐ ML ☐ SC
☐ SM ☒ SP ☐ SW ☐ GC ☐ GM ☐ GP ☐ GW

QUALIFIERS: ☐ TRACE ☐ MINOR ☐ SOME; SAND SIZE ☑ FINE ☐ MEDIUM ☐ COARSE

MOISTURE: ☒ DRY ☐ MOIST ☐ WET

SAMPLE CONTAINERS (NUMBER AND TYPE) 1 ziplock

ANALYSES: Ra-226 Metals

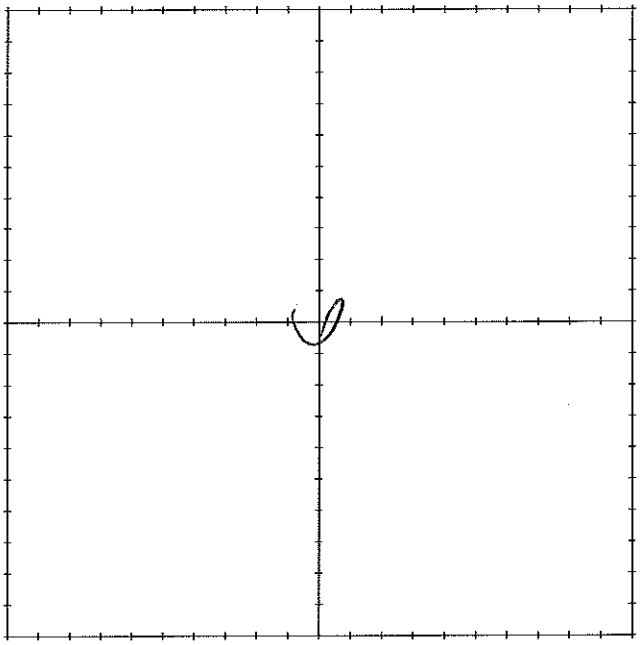

MARK INDIVIDUAL GRAB SAMPLE LOCATIONS IN GRID

SURFACE SOIL SAMPLE LOG FORM

AREA #/NAME SWMU-BG2-009 (Bay 7 Pit)

SAMPLE I.D. SWMU-BG2-009

SAMPLE COLLECTION DATE 10/24/16

SAMPLE COLLECTION TIME 1246

SAMPLE COLLECTED BY C Lee

WEATHER CONDITIONS 60's, cloudy

FIELD USCS DESCRIPTIONS fine wd/tan sand

MAJOR DIVISIONS: ☐ OH ☐ CH ☐ MH ☐ OH ☐ CL ☐ ML ☐ SC
☐ SM ☑ SP ☐ SW ☐ GC ☐ GM ☐ GP ☐ GW

QUALIFIERS: ☐ TRACE ☐ MINOR ☐ SOME; SAND SIZE ☑ FINE ☐ MEDIUM ☐ COARSE

MOISTURE: ☑ DRY ☐ MOIST ☐ WET

SAMPLE CONTAINERS (NUMBER AND TYPE) 1 Ziploc

ANALYSES: Ra-226, Metals

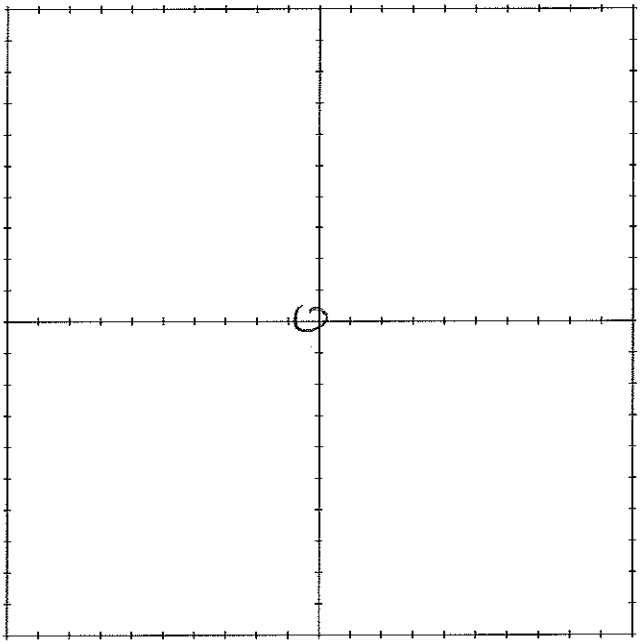

MARK INDIVIDUAL GRAB SAMPLE LOCATIONS IN GRID

SURFACE SOIL SAMPLE LOG FORM

AREA #/NAME SS35-BG2-010 (Baltisi)

SAMPLE I.D. SS35-BG2-010

SAMPLE COLLECTION DATE 10/24/16

SAMPLE COLLECTION TIME 1256

SAMPLE COLLECTED BY C. Lee

WEATHER CONDITIONS 60's cloudy

FIELD USCS DESCRIPTIONS Fine red/tan sand

MAJOR DIVISIONS: ☐ OH ☐ CH ☐ MH ☐ OH ☐ CL ☐ ML ☐ SC
☐ SM ☒ SP ☐ SW ☐ GC ☐ GM ☐ GP ☐ GW

QUALIFIERS: ☒ TRACE ☐ MINOR ☐ SOME; SAND SIZE ☒ FINE ☐ MEDIUM ☐ COARSE

MOISTURE: ☒ DRY ☐ MOIST ☐ WET

SAMPLE CONTAINERS (NUMBER AND TYPE) 1 ziplock

ANALYSES: Ra-226, Metals

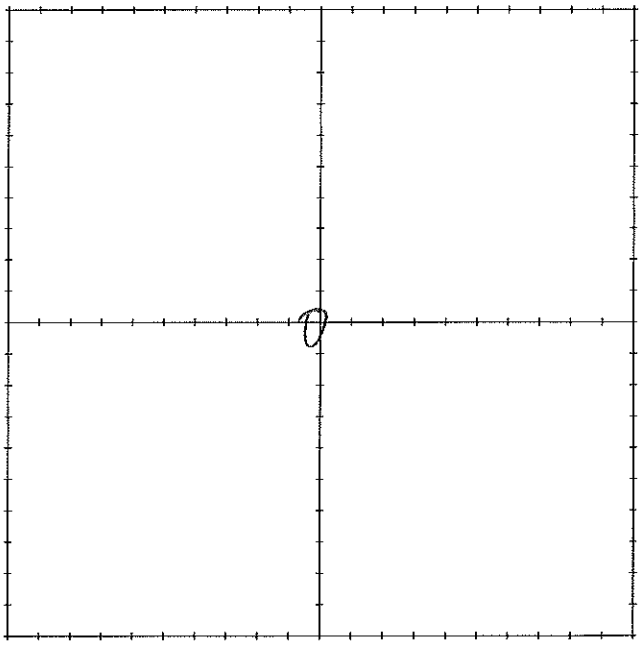

MARK INDIVIDUAL GRAB SAMPLE LOCATIONS IN GRID

SURFACE SOIL SAMPLE LOG FORM

AREA #/NAME Boyd Tisi BG3

SAMPLE I.D. S135-BG3-001

SAMPLE COLLECTION DATE 3-17-17

SAMPLE COLLECTION TIME 10:30

SAMPLE COLLECTED BY J Peterson

WEATHER CONDITIONS Warm

FIELD USCS DESCRIPTIONS Chinle Fm. Bedrock

MAJOR DIVISIONS: ☐ OH ☐ CH ☐ MH ☐ OH ☐ CL ☐ ML ☐ SC Bedrock
☒ SM ☐ SP ☐ SW ☐ GC ☐ GM ☐ GP ☐ GW

QUALIFIERS: ☐ TRACE ☐ MINOR ☐ SOME; SAND SIZE ☑ FINE ☒ MEDIUM ☐ COARSE

MOISTURE: ☒ DRY ☐ MOIST ☐ WET

SAMPLE CONTAINERS (NUMBER AND TYPE) Baggie 1

ANALYSES: Ra-226, Metals

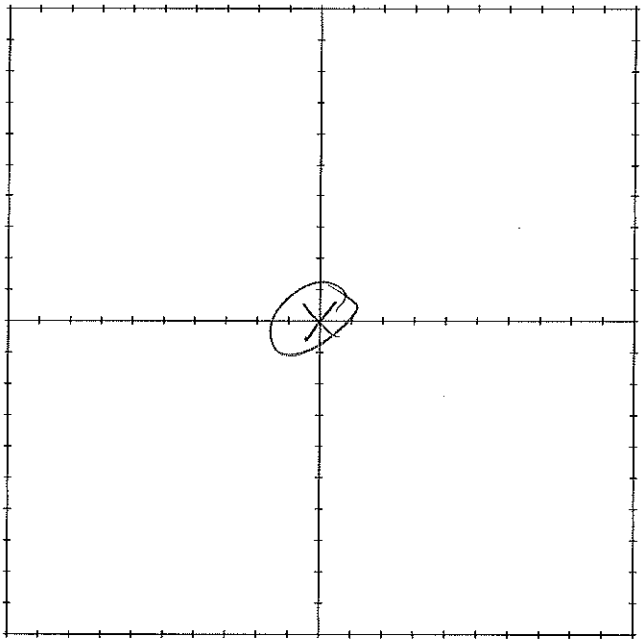

MARK INDIVIDUAL GRAB SAMPLE LOCATIONS IN GRID

SURFACE SOIL SAMPLE LOG FORM

AREA #/NAME Boyd Tiv. BG3

SAMPLE I.D. 5135-BG3-002 MS/MSD

SAMPLE COLLECTION DATE 3-17-17

SAMPLE COLLECTION TIME 10:40

SAMPLE COLLECTED BY J. Rawson

WEATHER CONDITIONS Warm

FIELD USCS DESCRIPTIONS Chinle Fm. Bedrock

MAJOR DIVISIONS: ☐ OH ☐ CH ☐ MH ☐ OH ☐ CL ☐ ML ☐ SC
☒ SM ☐ SP ☐ SW ☐ GC ☐ GM ☐ GP ☐ GW

QUALIFIERS: ☐ TRACE ☐ MINOR ☐ SOME; SAND SIZE ☒ FINE ☑ MEDIUM ☐ COARSE

MOISTURE: ☒ DRY ☐ MOIST ☐ WET

SAMPLE CONTAINERS (NUMBER AND TYPE) Baggie 3

ANALYSES: Ra-226, Metals

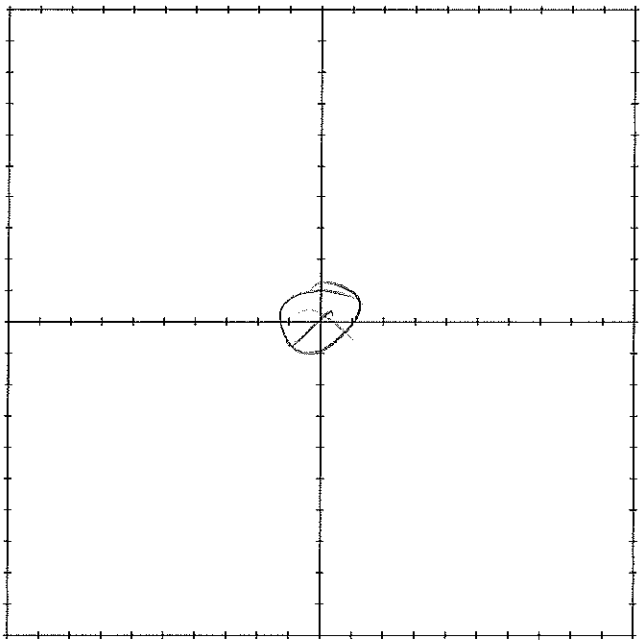

MARK INDIVIDUAL GRAB SAMPLE LOCATIONS IN GRID

SURFACE SOIL SAMPLE LOG FORM

AREA #/NAME Boyd Tis: BG3

SAMPLE I.D. 5135-BG3-003

SAMPLE COLLECTION DATE 3-17-17

SAMPLE COLLECTION TIME 10:45

SAMPLE COLLECTED BY J. Peterson

WEATHER CONDITIONS Warm

FIELD USCS DESCRIPTIONS Chinle Fm. Bedrock

MAJOR DIVISIONS: ☐ OH ☐ CH ☐ MH ☐ OH ☐ CL ☐ ML ☐ SC
☒ SM ☐ SP ☐ SW ☐ GC ☐ GM ☐ GP ☐ GW

QUALIFIERS: ☐ TRACE ☐ MINOR ☐ SOME; SAND SIZE ☒ FINE ☒ MEDIUM ☐ COARSE

MOISTURE: ☒ DRY ☐ MOIST ☐ WET

SAMPLE CONTAINERS (NUMBER AND TYPE) Baggie 1

ANALYSES: Ra-226, Metals

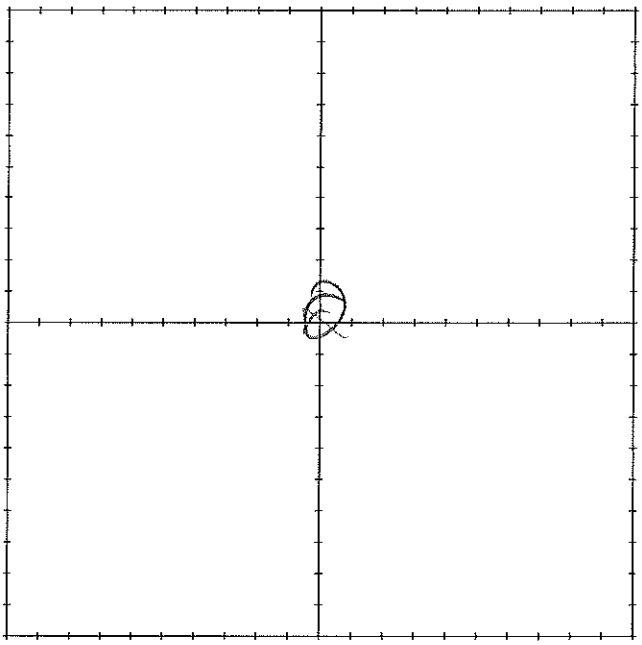

MARK INDIVIDUAL GRAB SAMPLE LOCATIONS IN GRID

SURFACE SOIL SAMPLE LOG FORM

AREA #/NAME Boyd Tisi BG3

SAMPLE I.D. S135-BG3-004 -204 (Duplicate)

SAMPLE COLLECTION DATE 3-17-17

SAMPLE COLLECTION TIME 10:50

SAMPLE COLLECTED BY J Peterson

WEATHER CONDITIONS warm

FIELD USCS DESCRIPTIONS Chinle Fm Bedrock

MAJOR DIVISIONS: ☐ OH ☐ CH ☐ MH ☐ OH ☐ CL ☐ ML ☐ SC
☒ SM ☐ SP ☐ SW ☐ GC ☐ GM ☐ GP ☐ GW

QUALIFIERS: ☐ TRACE ☐ MINOR ☐ SOME; SAND SIZE ☒ FINE ☒ MEDIUM ☐ COARSE

MOISTURE: ☒ DRY ☐ MOIST ☐ WET

SAMPLE CONTAINERS (NUMBER AND TYPE) Baggie 2

ANALYSES: Ra-226, metals

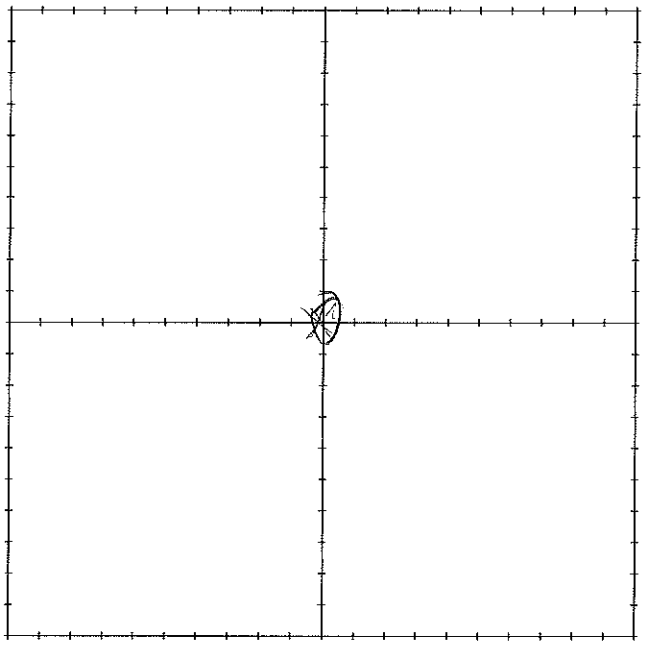

MARK INDIVIDUAL GRAB SAMPLE LOCATIONS IN GRID

SURFACE SOIL SAMPLE LOG FORM

AREA #/NAME Boyd Tr. BG3

SAMPLE I.D. 5135-BG3-005

SAMPLE COLLECTION DATE 3-17-17

SAMPLE COLLECTION TIME 10:55

SAMPLE COLLECTED BY J. Peterson

WEATHER CONDITIONS Warm

FIELD USCS DESCRIPTIONS Chinle Fm. Bedrock

MAJOR DIVISIONS: ☐ OH ☐ CH ☐ MH ☐ OH ☐ CL ☐ ML ☐ SC
☒ SM ☐ SP ☐ SW ☐ GC ☐ GM ☐ GP ☐ GW

QUALIFIERS: ☐ TRACE ☐ MINOR ☐ SOME; SAND SIZE ☒ FINE ☒ MEDIUM ☐ COARSE

MOISTURE: ☒ DRY ☐ MOIST ☐ WET

SAMPLE CONTAINERS (NUMBER AND TYPE) Baggie 1

ANALYSES: Ra-226, metals

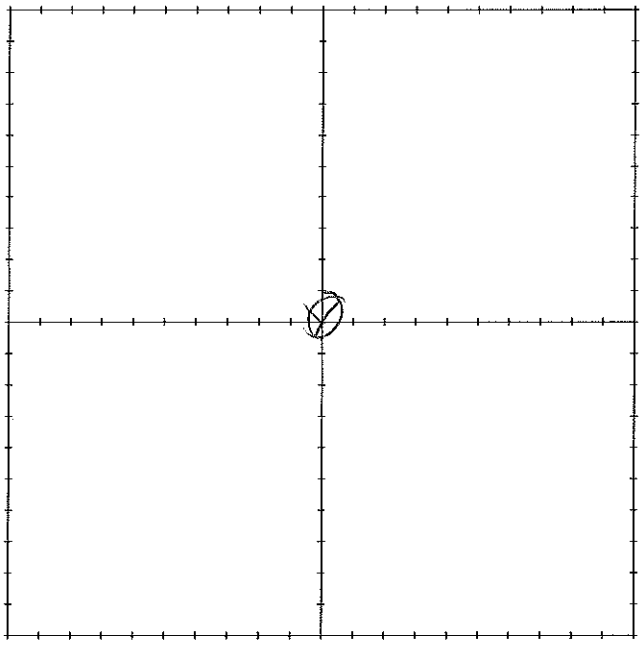

MARK INDIVIDUAL GRAB SAMPLE LOCATIONS IN GRID

SURFACE SOIL SAMPLE LOG FORM

AREA #/NAME Boyd Tis: BG3

SAMPLE I.D. S135-BG3-006 MS/MSD

SAMPLE COLLECTION DATE 3-17-17

SAMPLE COLLECTION TIME 11:00

SAMPLE COLLECTED BY J Peterson

WEATHER CONDITIONS Warm

FIELD USCS DESCRIPTIONS Chinle Fm. Bedrock

MAJOR DIVISIONS: ☐ OH ☐ CH ☐ MH ☐ OH ☐ CL ☐ ML ☐ SC
☒ SM ☐ SP ☐ SW ☐ GC ☐ GM ☐ GP ☐ GW

QUALIFIERS: ☐ TRACE ☐ MINOR ☐ SOME; SAND SIZE ☒ FINE ☒ MEDIUM ☐ COARSE

MOISTURE: ☒ DRY ☐ MOIST ☐ WET

SAMPLE CONTAINERS (NUMBER AND TYPE) Baggie 3

ANALYSES: Ra-226, Metals

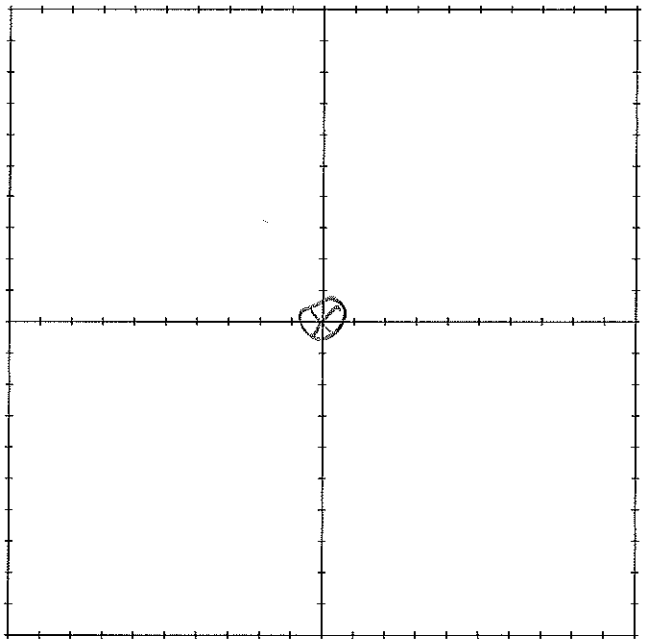

MARK INDIVIDUAL GRAB SAMPLE LOCATIONS IN GRID

SURFACE SOIL SAMPLE LOG FORM

AREA #/NAME Boyd Tr. BG3

SAMPLE I.D. 5135-BG3-007 -207

SAMPLE COLLECTION DATE 3-17-17

SAMPLE COLLECTION TIME 11:05

SAMPLE COLLECTED BY J Peterson

WEATHER CONDITIONS Warm

FIELD USCS DESCRIPTIONS Chinle Fm. Bedrock

MAJOR DIVISIONS: ☐ OH ☐ CH ☐ MH ☐ OH ☐ CL ☐ ML ☐ SC
☒ SM ☐ SP ☐ SW ☐ GC ☐ GM ☐ GP ☐ GW

QUALIFIERS: ☐ TRACE ☐ MINOR ☐ SOME; SAND SIZE ☒ FINE ☒ MEDIUM ☐ COARSE

MOISTURE: ☒ DRY ☐ MOIST ☐ WET

SAMPLE CONTAINERS (NUMBER AND TYPE) Baggie 2

ANALYSES: Ra-226, Metals

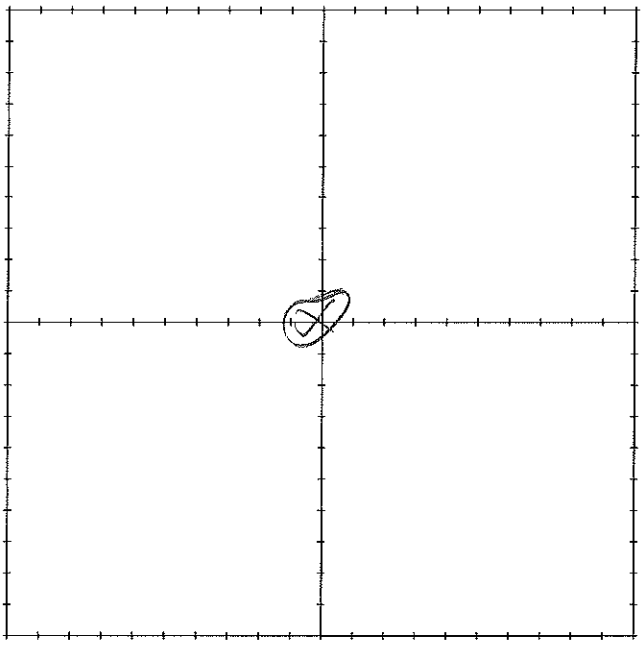

MARK INDIVIDUAL GRAB SAMPLE LOCATIONS IN GRID

SURFACE SOIL SAMPLE LOG FORM

AREA #/NAME Boyd Tisi BG3

SAMPLE I.D. 5135-BG3-008

SAMPLE COLLECTION DATE 3-17-17

SAMPLE COLLECTION TIME 11:10

SAMPLE COLLECTED BY J Peterson

WEATHER CONDITIONS Warm

FIELD USCS DESCRIPTIONS Chinle Fm. Bedrock

MAJOR DIVISIONS: ☐ OH ☐ CH ☐ MH ☐ OH ☐ CL ☐ ML ☐ SC
☒ SM ☐ SP ☐ SW ☐ GC ☐ GM ☐ GP ☐ GW

QUALIFIERS: ☐ TRACE ☐ MINOR ☐ SOME; SAND SIZE ☒ FINE ☒ MEDIUM ☐ COARSE

MOISTURE: ☒ DRY ☐ MOIST ☐ WET

SAMPLE CONTAINERS (NUMBER AND TYPE) Baggie 1

ANALYSES: Ra-226, Metals

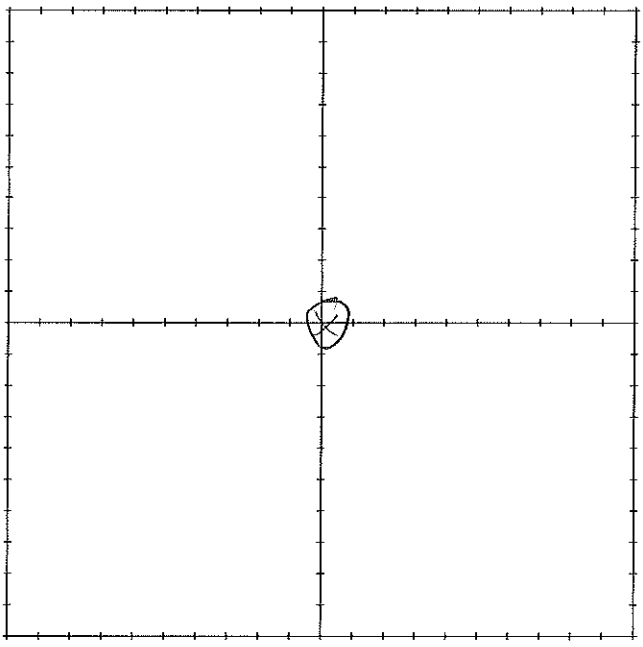

MARK INDIVIDUAL GRAB SAMPLE LOCATIONS IN GRID

SURFACE SOIL SAMPLE LOG FORM

AREA #/NAME Boyd Tis: BG3

SAMPLE I.D. S135-BG3-009

SAMPLE COLLECTION DATE 5-17-17

SAMPLE COLLECTION TIME 11:15

SAMPLE COLLECTED BY S Peterson

WEATHER CONDITIONS Warm

FIELD USCS DESCRIPTIONS Chinle Fm. Bedrock

MAJOR DIVISIONS: ☐ OH ☐ CH ☐ MH ☐ OH ☐ CL ☐ ML ☐ SC
☒ SM ☐ SP ☐ SW ☐ GC ☐ GM ☐ GP ☐ GW

QUALIFIERS: ☐ TRACE ☐ MINOR ☐ SOME; SAND SIZE ☒ FINE ☒ MEDIUM ☐ COARSE

MOISTURE: ☒ DRY ☐ MOIST ☐ WET

SAMPLE CONTAINERS (NUMBER AND TYPE) Baggie 1

ANALYSES: Ra-226, Metals

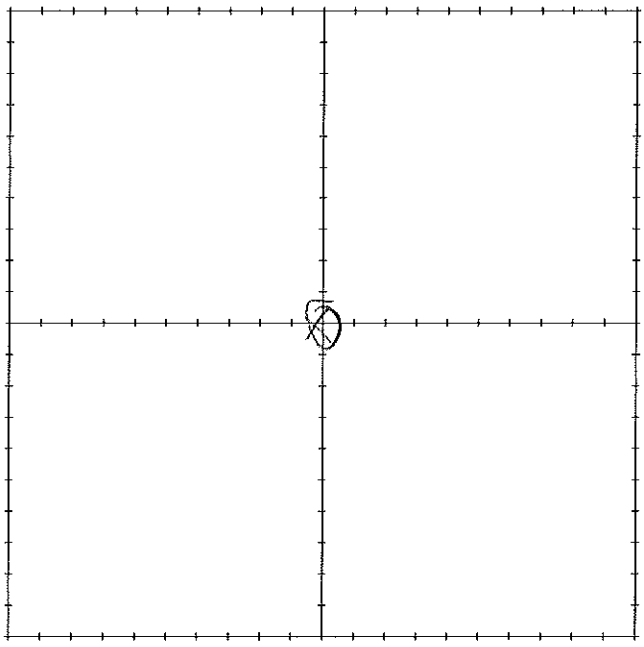

MARK INDIVIDUAL GRAB SAMPLE LOCATIONS IN GRID

SURFACE SOIL SAMPLE LOG FORM

AREA #/NAME Boyd Tin BG3

SAMPLE I.D. 3135-BG3-010

SAMPLE COLLECTION DATE 3-17-17

SAMPLE COLLECTION TIME 11:20

SAMPLE COLLECTED BY J Peterson

WEATHER CONDITIONS Warm

FIELD USCS DESCRIPTIONS Chinle Fm. Bedrock

MAJOR DIVISIONS: ☐ OH ☐ CH ☐ MH ☐ OH ☐ CL ☐ ML ☐ SC
☒ SM ☐ SP ☐ SW ☐ GC ☐ GM ☐ GP ☐ GW

QUALIFIERS: ☐ TRACE ☐ MINOR ☐ SOME; SAND SIZE ☒ FINE ☒ MEDIUM ☐ COARSE

MOISTURE: ☒ DRY ☐ MOIST ☐ WET

SAMPLE CONTAINERS (NUMBER AND TYPE) Baggie 1

ANALYSES: Ra-226, Metals

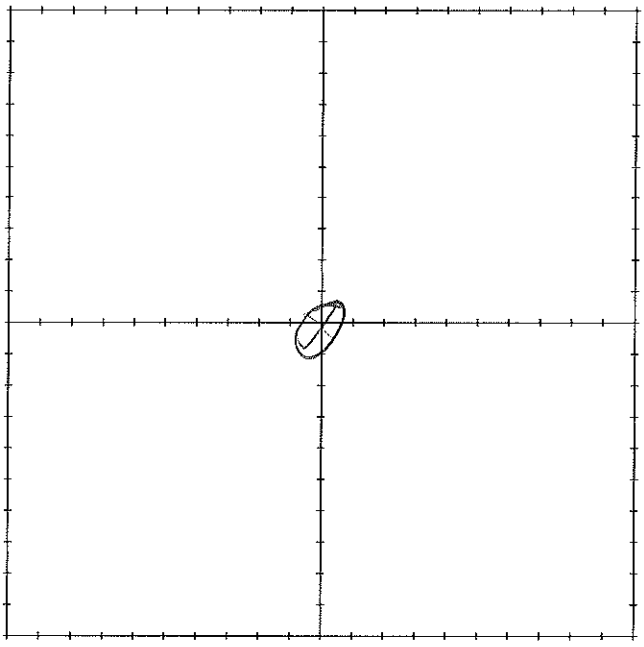

MARK INDIVIDUAL GRAB SAMPLE LOCATIONS IN GRID

SURFACE SOIL SAMPLE LOG FORM

AREA #/NAME Boyd Tw BG3

SAMPLE I.D. S135-BG3-011-1 (0-0.5') -011-2 (0.5-0.9')

SAMPLE COLLECTION DATE 3-17-17

SAMPLE COLLECTION TIME 11:30, 11:40

SAMPLE COLLECTED BY J Peterson

WEATHER CONDITIONS Warm

FIELD USCS DESCRIPTIONS Chinle Fm Bedrock

MAJOR DIVISIONS: ☐ OH ☐ CH ☐ MH ☐ OH ☐ CL ☐ ML ☐ SC
☒ SM ☐ SP ☐ SW ☐ GC ☐ GM ☐ GP ☐ GW

QUALIFIERS: ☐ TRACE ☐ MINOR ☐ SOME; SAND SIZE ☒ FINE ☒ MEDIUM ☐ COARSE

MOISTURE: ☒ DRY ☐ MOIST ☐ WET

SAMPLE CONTAINERS (NUMBER AND TYPE) Baggies 2

ANALYSES: Ra-226, Metals

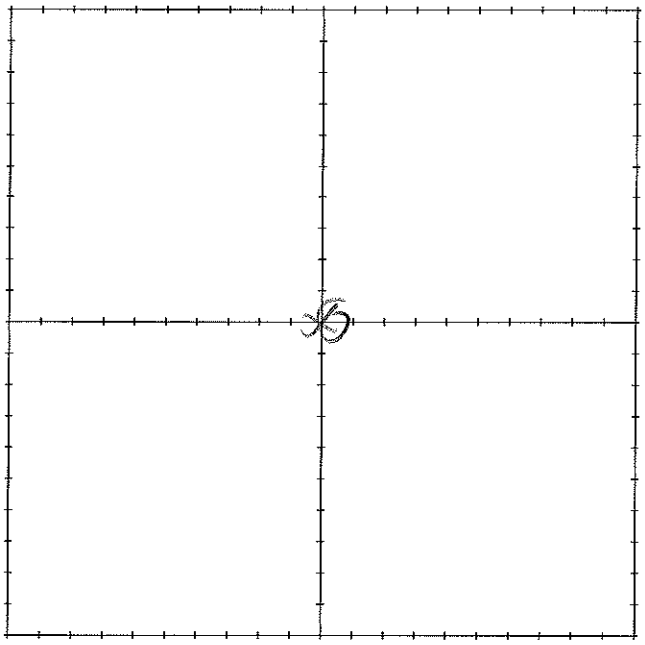

MARK INDIVIDUAL GRAB SAMPLE LOCATIONS IN GRID

SURFACE SOIL SAMPLE LOG FORM

AREA #/NAME BOYD TISI B64

SAMPLE I.D. 5135-B64-001

SAMPLE COLLECTION DATE 3-17-17

SAMPLE COLLECTION TIME 12:15

SAMPLE COLLECTED BY J. Peterson

WEATHER CONDITIONS Warm

FIELD USCS DESCRIPTIONS Chinle Fm Bedrock

MAJOR DIVISIONS: ☐ OH ☐ CH ☐ MH ☐ OH ☐ CL ☐ ML ☐ SC
☒ SM ☐ SP ☐ SW ☐ GC ☐ GM ☐ GP ☐ GW

QUALIFIERS: ☐ TRACE ☐ MINOR ☐ SOME; SAND SIZE ☒ FINE ☒ MEDIUM ☐ COARSE

MOISTURE: ☑ DRY ☐ MOIST ☐ WET

SAMPLE CONTAINERS (NUMBER AND TYPE) Baggie (1)

ANALYSES: Ra-226, metals

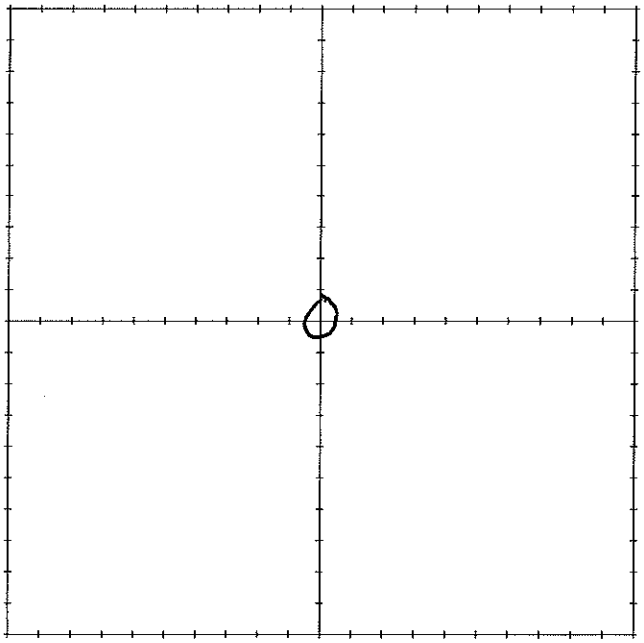

MARK INDIVIDUAL GRAB SAMPLE LOCATIONS IN GRID

SURFACE SOIL SAMPLE LOG FORM

AREA #/NAME B64D Tisi 864

SAMPLE I.D. 5135-B64-002 Dup -202

SAMPLE COLLECTION DATE 3-17-17

SAMPLE COLLECTION TIME 12:20

SAMPLE COLLECTED BY J. Peterson

WEATHER CONDITIONS Warm

FIELD USCS DESCRIPTIONS Chinle Fm Bedrock

MAJOR DIVISIONS: ☐ OH ☐ CH ☐ MH ☐ OH ☐ CL ☐ ML ☐ SC
☒ SM ☐ SP ☐ SW ☐ GC ☐ GM ☐ GP ☐ GW

QUALIFIERS: ☐ TRACE ☐ MINOR ☐ SOME; SAND SIZE ☒ FINE ☒ MEDIUM ☐ COARSE

MOISTURE: ☒ DRY ☐ MOIST ☐ WET

SAMPLE CONTAINERS (NUMBER AND TYPE) Baggies (2)

ANALYSES: Ra-226, metals

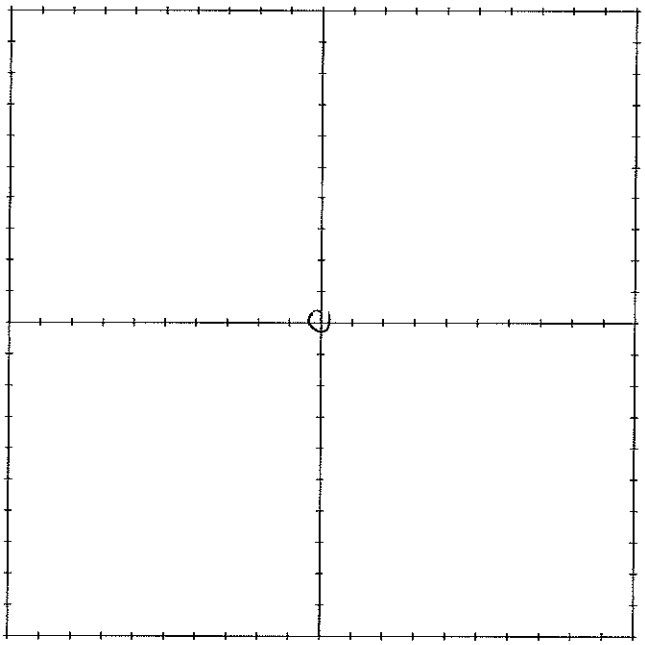

MARK INDIVIDUAL GRAB SAMPLE LOCATIONS IN GRID

SURFACE SOIL SAMPLE LOG FORM

AREA #/NAME: Boyd Tisi B64

SAMPLE I.D.: S135-B64-003

SAMPLE COLLECTION DATE: 3-17-17

SAMPLE COLLECTION TIME: 12:25

SAMPLE COLLECTED BY: J. Peterson

WEATHER CONDITIONS: warm

FIELD USCS DESCRIPTIONS: Chinle Fm Bedrock

MAJOR DIVISIONS: ☐ OH ☐ CH ☐ MH ☐ OH ☐ CL ☐ ML ☐ SC
☒ SM ☐ SP ☐ SW ☐ GC ☐ GM ☐ GP ☐ GW

QUALIFIERS: ☐ TRACE ☐ MINOR ☐ SOME; SAND SIZE ☑ FINE ☑ MEDIUM ☐ COARSE

MOISTURE: ☑ DRY ☐ MOIST ☐ WET

SAMPLE CONTAINERS (NUMBER AND TYPE): Baggie (1)

ANALYSES: Ra-226, metals

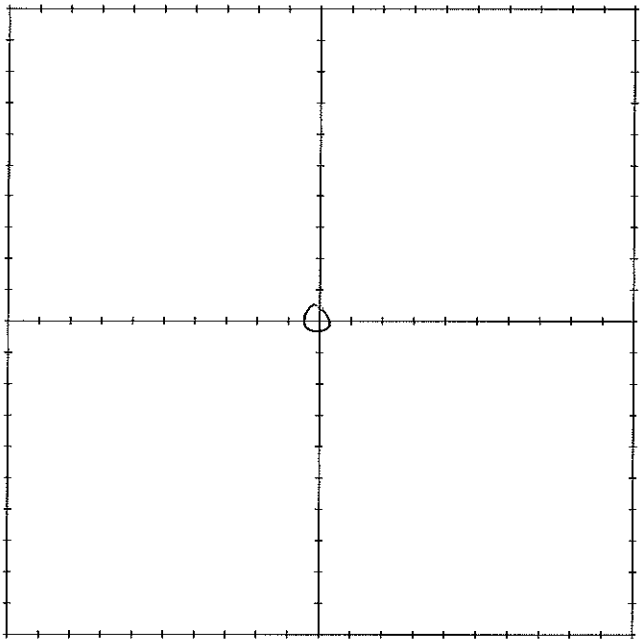

MARK INDIVIDUAL GRAB SAMPLE LOCATIONS IN GRID

SURFACE SOIL SAMPLE LOG FORM

AREA #/NAME Bond Fisi BG4

SAMPLE I.D. 5135-BG4-004

SAMPLE COLLECTION DATE 8-17-17

SAMPLE COLLECTION TIME 12:30

SAMPLE COLLECTED BY J. Peterson

WEATHER CONDITIONS warm

FIELD USCS DESCRIPTIONS Chinle Fm Bedrock

MAJOR DIVISIONS: ☐ OH ☐ CH ☐ MH ☐ OH ☐ CL ☐ ML ☐ SC
☒ SM ☐ SP ☐ SW ☐ GC ☐ GM ☐ GP ☐ GW

QUALIFIERS: ☐ TRACE ☐ MINOR ☐ SOME; SAND SIZE ☒ FINE ☒ MEDIUM ☐ COARSE

MOISTURE: ☑ DRY ☐ MOIST ☐ WET

SAMPLE CONTAINERS (NUMBER AND TYPE) Baggie (1)

ANALYSES: Ra-226, metals

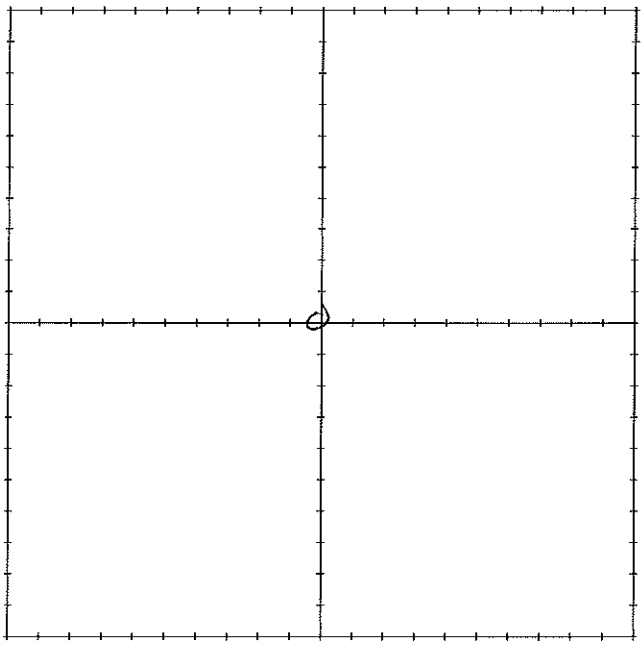

MARK INDIVIDUAL GRAB SAMPLE LOCATIONS IN GRID

SURFACE SOIL SAMPLE LOG FORM

AREA #/NAME Boyd Tisi B64

SAMPLE I.D. 5135-B64-005

SAMPLE COLLECTION DATE 3-17-17

SAMPLE COLLECTION TIME 12:35

SAMPLE COLLECTED BY J. Peterson

WEATHER CONDITIONS Warm

FIELD USCS DESCRIPTIONS Chinle Fm Bedrock

MAJOR DIVISIONS: ☐ OH ☐ CH ☐ MH ☐ OH ☐ CL ☐ ML ☐ SC
☒ SM ☐ SP ☐ SW ☐ GC ☐ GM ☐ GP ☐ GW

QUALIFIERS: ☐ TRACE ☐ MINOR ☐ SOME; SAND SIZE ☒ FINE ☒ MEDIUM ☐ COARSE

MOISTURE: ☒ DRY ☐ MOIST ☐ WET

SAMPLE CONTAINERS (NUMBER AND TYPE) Baggie (1)

ANALYSES: Ra-226, metals

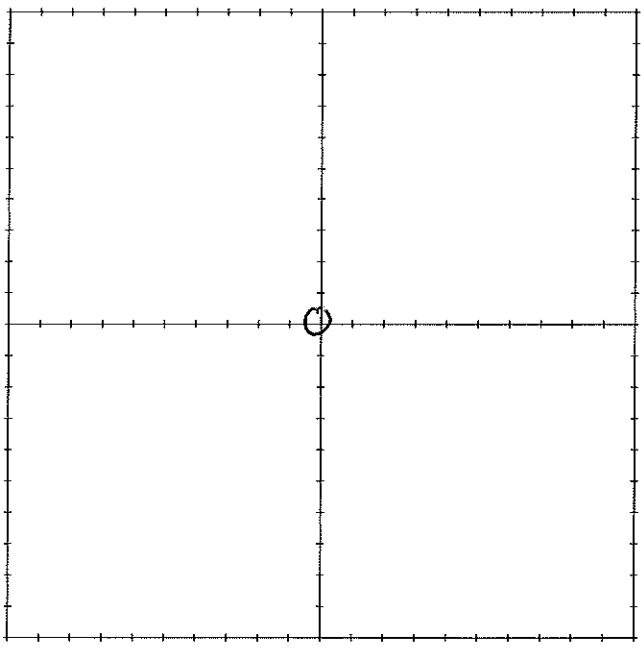

MARK INDIVIDUAL GRAB SAMPLE LOCATIONS IN GRID

SURFACE SOIL SAMPLE LOG FORM

AREA #/NAME: BOYD T1S1 B64

SAMPLE I.D.: S135-B64-006

SAMPLE COLLECTION DATE: 3-17-17

SAMPLE COLLECTION TIME: 12:40

SAMPLE COLLECTED BY: J. Peterson

WEATHER CONDITIONS: warm

FIELD USCS DESCRIPTIONS: Chinle Fm Bedrock

MAJOR DIVISIONS: ☐ OH ☐ CH ☐ MH ☐ OH ☐ CL ☐ ML ☐ SC
☒ SM ☐ SP ☐ SW ☐ GC ☐ GM ☐ GP ☐ GW

QUALIFIERS: ☐ TRACE ☐ MINOR ☐ SOME; SAND SIZE ☒ FINE ☒ MEDIUM ☐ COARSE

MOISTURE: ☑ DRY ☐ MOIST ☐ WET

SAMPLE CONTAINERS (NUMBER AND TYPE): Baggie (1)

ANALYSES: Ra-226 metals

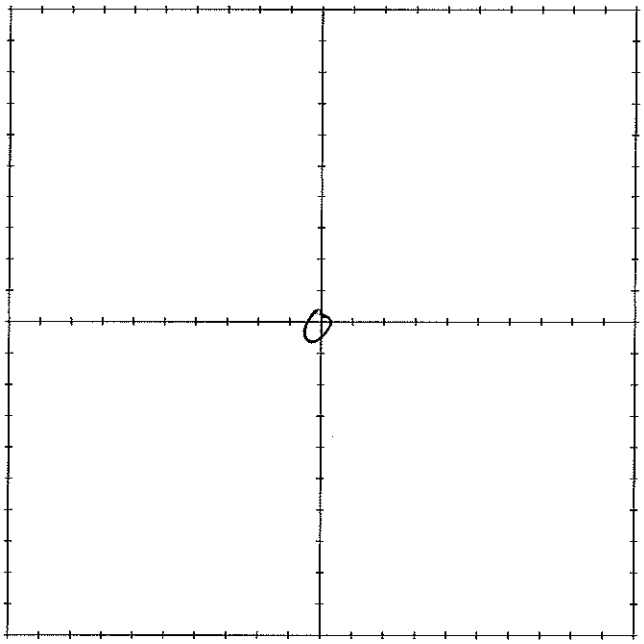

MARK INDIVIDUAL GRAB SAMPLE LOCATIONS IN GRID

SURFACE SOIL SAMPLE LOG FORM

AREA #/NAME: BOYD TIS1 BG4

SAMPLE I.D.: 5135-BG4-007

SAMPLE COLLECTION DATE: 3-17-17

SAMPLE COLLECTION TIME: ~~J. Peterson~~ TAW 12:45

SAMPLE COLLECTED BY: J. Peterson

WEATHER CONDITIONS: warm

FIELD USCS DESCRIPTIONS: Chinle Fm Bedrock

MAJOR DIVISIONS: ☐ OH ☐ CH ☐ MH ☐ OH ☐ CL ☐ ML ☐ SC
☒ SM ☐ SP ☐ SW ☐ GC ☐ GM ☐ GP ☐ GW

QUALIFIERS: ☐ TRACE ☐ MINOR ☐ SOME; SAND SIZE ☒ FINE ☒ MEDIUM ☐ COARSE

MOISTURE: ☒ DRY ☐ MOIST ☐ WET

SAMPLE CONTAINERS (NUMBER AND TYPE): Baggie (1)

ANALYSES: Ra-226, metals

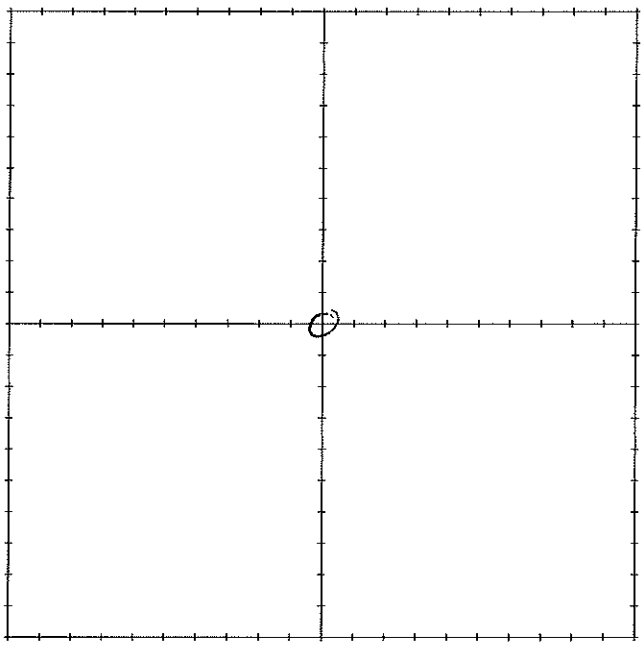

MARK INDIVIDUAL GRAB SAMPLE LOCATIONS IN GRID

SURFACE SOIL SAMPLE LOG FORM

AREA #/NAME: Boyd Tisi BG4

SAMPLE I.D.: 5135-BG4-008

SAMPLE COLLECTION DATE: 3-17-17

SAMPLE COLLECTION TIME: 12:50

SAMPLE COLLECTED BY: J. Peterson

WEATHER CONDITIONS: warm

FIELD USCS DESCRIPTIONS: Chinle Fm Bedrock

MAJOR DIVISIONS: ☐ OH ☐ CH ☐ MH ☐ OH ☐ CL ☐ ML ☐ SC
☒ SM ☐ SP ☐ SW ☐ GC ☐ GM ☐ GP ☐ GW

QUALIFIERS: ☐ TRACE ☐ MINOR ☐ SOME; SAND SIZE ☒ FINE ☑ MEDIUM ☐ COARSE

MOISTURE: ☑ DRY ☐ MOIST ☐ WET

SAMPLE CONTAINERS (NUMBER AND TYPE): Baggie (1)

ANALYSES: Ra-226, metals

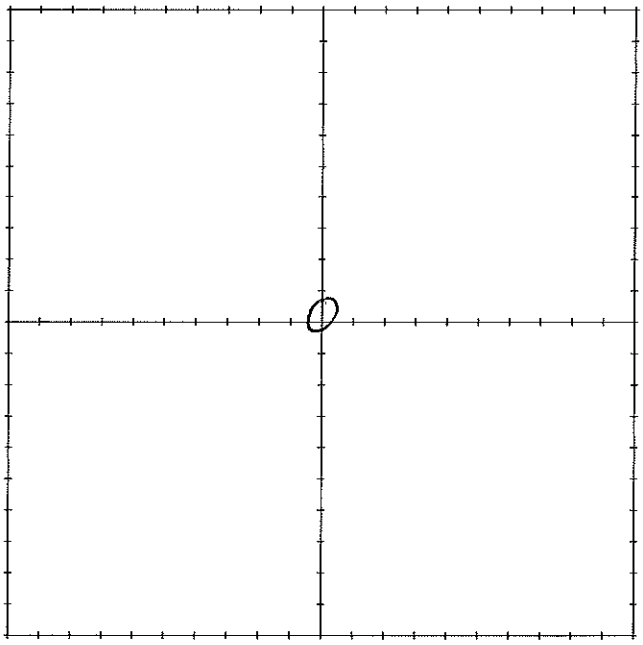

MARK INDIVIDUAL GRAB SAMPLE LOCATIONS IN GRID

SURFACE SOIL SAMPLE LOG FORM

AREA #/NAME: BOYD TIS1 B64

SAMPLE I.D.: 5135-B64-009

SAMPLE COLLECTION DATE: 3-17-17

SAMPLE COLLECTION TIME: 12:55

SAMPLE COLLECTED BY: J. Peterson

WEATHER CONDITIONS: warm

FIELD USCS DESCRIPTIONS: Chinle Fm Bedrock

MAJOR DIVISIONS: ☐ OH ☐ CH ☐ MH ☐ OH ☐ CL ☐ ML ☐ SC
☒ SM ☐ SP ☐ SW ☐ GC ☐ GM ☐ GP ☐ GW

QUALIFIERS: ☐ TRACE ☐ MINOR ☐ SOME; SAND SIZE ☒ FINE ☒ MEDIUM ☐ COARSE

MOISTURE: ☒ DRY ☐ MOIST ☐ WET

SAMPLE CONTAINERS (NUMBER AND TYPE): Baggie (1)

ANALYSES: Ra-226 metals

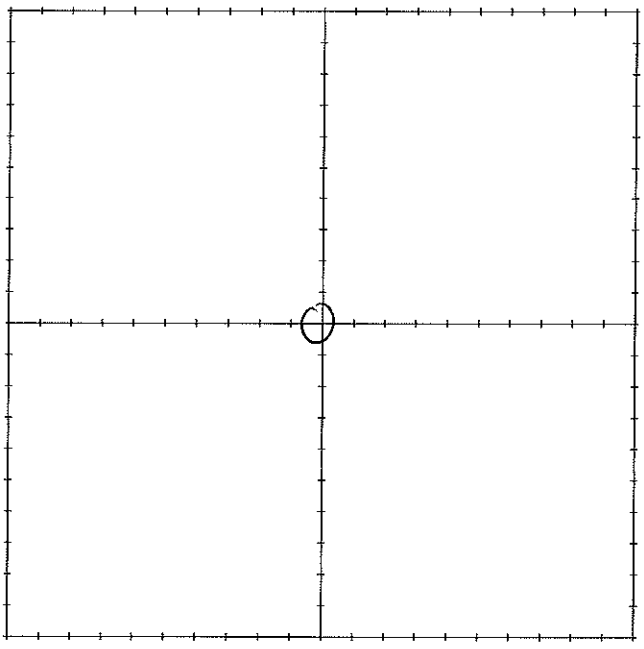

MARK INDIVIDUAL GRAB SAMPLE LOCATIONS IN GRID

SURFACE SOIL SAMPLE LOG FORM

AREA #/NAME: BOYD T1S1 BG4

SAMPLE I.D.: 5135-BG4-010

SAMPLE COLLECTION DATE: 3-17-17

SAMPLE COLLECTION TIME: 13:00

SAMPLE COLLECTED BY: J. Peterson

WEATHER CONDITIONS: warm

FIELD USCS DESCRIPTIONS: Chinle Fm Bedrock

MAJOR DIVISIONS: ☐ OH ☐ CH ☐ MH ☐ OH ☐ CL ☐ ML ☐ SC
☒ SM ☐ SP ☐ SW ☐ GC ☐ GM ☐ GP ☐ GW

QUALIFIERS: ☐ TRACE ☐ MINOR ☐ SOME; SAND SIZE ☒ FINE ☑ MEDIUM ☐ COARSE

MOISTURE: ☑ DRY ☐ MOIST ☐ WET

SAMPLE CONTAINERS (NUMBER AND TYPE): Baggie (1)

ANALYSES: Ra-226, metals

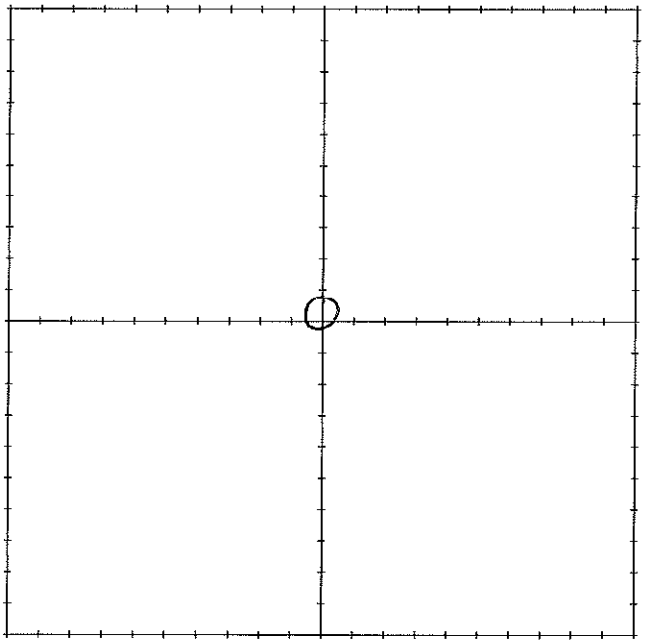

MARK INDIVIDUAL GRAB SAMPLE LOCATIONS IN GRID

SURFACE SOIL SAMPLE LOG FORM

AREA #/NAME S135 (Bay J Tisi)

SAMPLE I.D. S35-C01-001 (201, Dup)

SAMPLE COLLECTION DATE 10/26/16

SAMPLE COLLECTION TIME 0845

SAMPLE COLLECTED BY C. Lee

WEATHER CONDITIONS 60's, Clear

FIELD USCS DESCRIPTIONS Fine red sand

MAJOR DIVISIONS: ☐ OH ☐ CH ☐ MH ☐ OH ☐ CL ☐ ML ☐ SC
☐ SM ☑ SP ☐ SW ☐ GC ☐ GM ☐ GP ☐ GW

QUALIFIERS: ☐ TRACE ☐ MINOR ☐ SOME; SAND SIZE ☐ FINE ☐ MEDIUM ☐ COARSE

MOISTURE: ☑ DRY ☐ MOIST ☐ WET

SAMPLE CONTAINERS (NUMBER AND TYPE) 2, Ziplock

ANALYSES: Ra-226, Isotopic Thorium

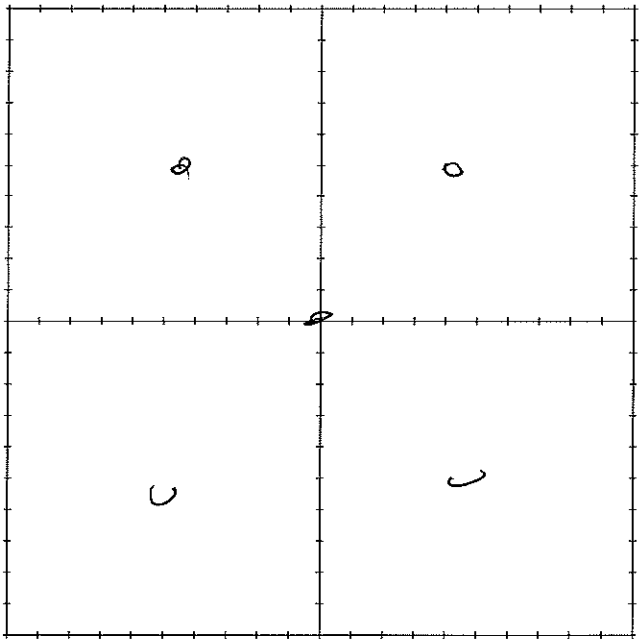

MARK INDIVIDUAL GRAB SAMPLE LOCATIONS IN GRID

SURFACE SOIL SAMPLE LOG FORM

AREA #/NAME S135 (Boyd Tisi)

SAMPLE I.D. S135-C02-001

SAMPLE COLLECTION DATE 10/26/16

SAMPLE COLLECTION TIME 0905

SAMPLE COLLECTED BY C Lee

WEATHER CONDITIONS 60's, clear

FIELD USCS DESCRIPTIONS Fine red sand

MAJOR DIVISIONS: ☐ OH ☐ CH ☐ MH ☐ OH ☐ CL ☐ ML ☐ SC
☐ SM ☑ SP ☐ SW ☐ GC ☐ GM ☐ GP ☐ GW

QUALIFIERS: ☐ TRACE ☐ MINOR ☐ SOME; SAND SIZE ☐ FINE ☐ MEDIUM ☐ COARSE

MOISTURE: ☐ DRY ☑ MOIST ☐ WET

SAMPLE CONTAINERS (NUMBER AND TYPE) 2, ziploc

ANALYSES: Ra-226, Isotopic Thorium

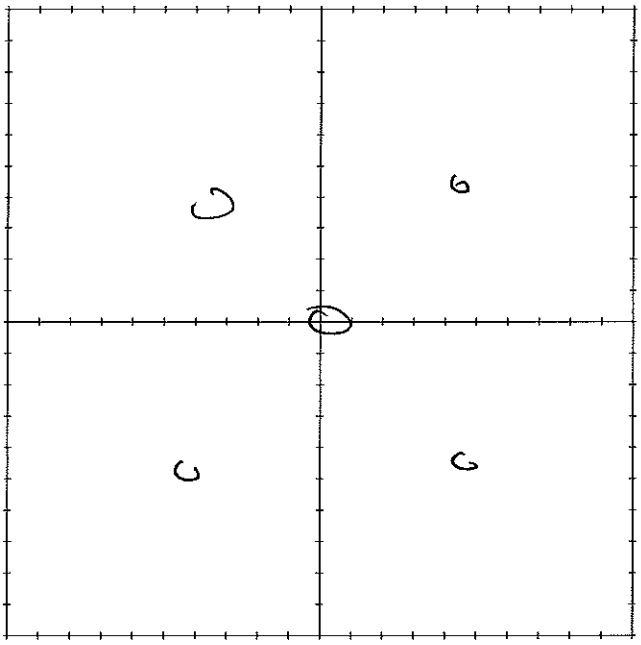

MARK INDIVIDUAL GRAB SAMPLE LOCATIONS IN GRID

SURFACE SOIL SAMPLE LOG FORM

AREA #/NAME 5135C (Boyd Trail)

SAMPLE I.D. 5135-C03-001

SAMPLE COLLECTION DATE 10/26/16

SAMPLE COLLECTION TIME 0935

SAMPLE COLLECTED BY C. Lee

WEATHER CONDITIONS 60's, Sunny

FIELD USCS DESCRIPTIONS Fine red sand

MAJOR DIVISIONS: ☐ OH ☐ CH ☐ MH ☐ OH ☐ CL ☐ ML ☐ SC
☐ SM ☑ SP ☐ SW ☐ GC ☐ GM ☐ GP ☐ GW

QUALIFIERS: ☐ TRACE ☐ MINOR ☐ SOME; SAND SIZE ☐ FINE ☐ MEDIUM ☐ COARSE

MOISTURE: ☑ DRY ☐ MOIST ☐ WET

SAMPLE CONTAINERS (NUMBER AND TYPE) 2 ziplocs

ANALYSES: Ra-226, Isotopic Thorium

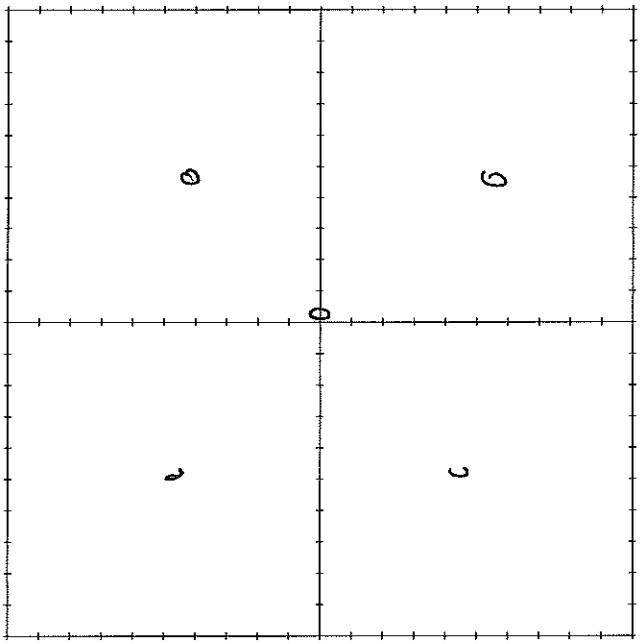

MARK INDIVIDUAL GRAB SAMPLE LOCATIONS IN GRID

SURFACE SOIL SAMPLE LOG FORM

AREA #/NAME S135 (Boyd Tisi)

SAMPLE I.D. S135-004-001

SAMPLE COLLECTION DATE 10/26/16

SAMPLE COLLECTION TIME 1005

SAMPLE COLLECTED BY C. Lee

WEATHER CONDITIONS 60's, clear

FIELD USCS DESCRIPTIONS Fine red sand

MAJOR DIVISIONS: ☐ OH ☐ CH ☐ MH ☐ OH ☐ CL ☐ ML ☐ SC
☐ SM ☑ SP ☐ SW ☐ GC ☐ GM ☐ GP ☐ GW

QUALIFIERS: ☐ TRACE ☐ MINOR ☐ SOME; SAND SIZE ☐ FINE ☐ MEDIUM ☐ COARSE

MOISTURE: ☑ DRY ☐ MOIST ☐ WET

SAMPLE CONTAINERS (NUMBER AND TYPE) 2 ziplocs

ANALYSES: Ra-226, Isotopic Thorium

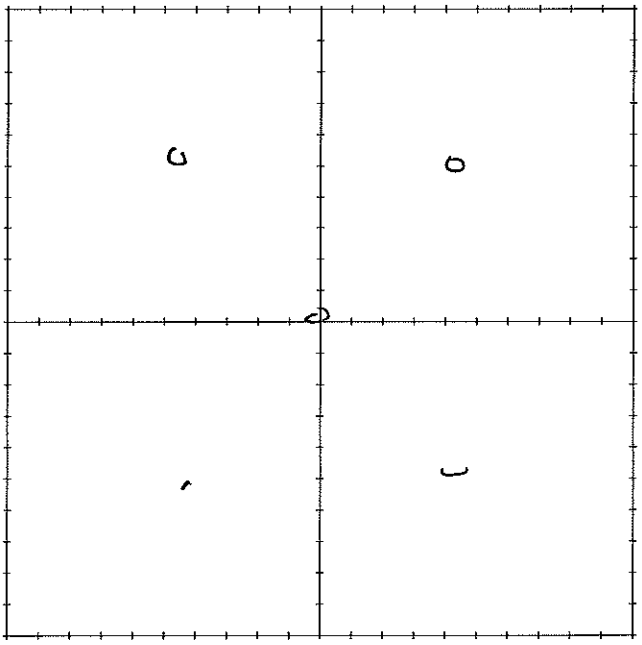

MARK INDIVIDUAL GRAB SAMPLE LOCATIONS IN GRID

SURFACE SOIL SAMPLE LOG FORM

AREA #/NAME S135 (Boyd Tisi)

SAMPLE I.D. S135-605-001

SAMPLE COLLECTION DATE 10/26/16

SAMPLE COLLECTION TIME 1045

SAMPLE COLLECTED BY C. Lee

WEATHER CONDITIONS 60's, Sunny

FIELD USCS DESCRIPTIONS Fine red sand

MAJOR DIVISIONS: ☐ OH ☐ CH ☐ MH ☐ OH ☐ CL ☐ ML ☐ SC
☐ SM ☑ ~~SP~~ ☐ SW ☐ GC ☐ GM ☐ GP ☐ GW

QUALIFIERS: ☐ TRACE ☐ MINOR ☐ SOME; SAND SIZE ☐ FINE ☐ MEDIUM ☐ COARSE

MOISTURE: ☑ ~~DRY~~ ☐ MOIST ☐ WET

SAMPLE CONTAINERS (NUMBER AND TYPE) 2 ziplocs

ANALYSES: Ra-226, Isotopic Thorium

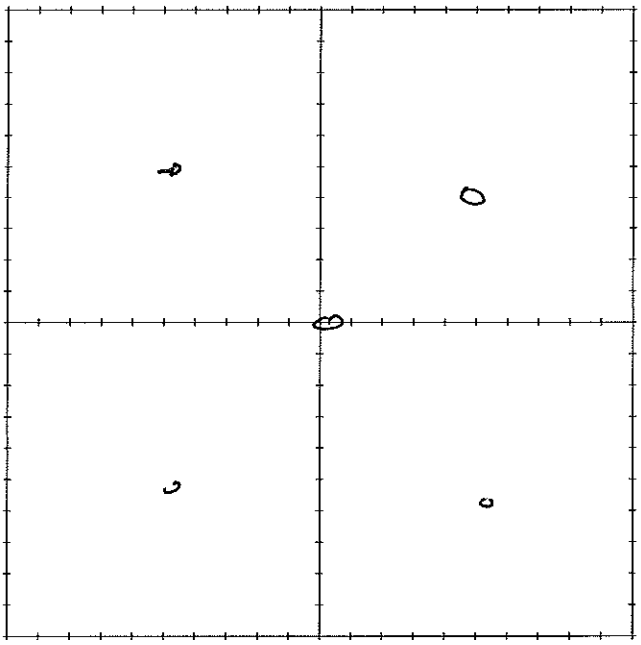

MARK INDIVIDUAL GRAB SAMPLE LOCATIONS IN GRID

SURFACE SOIL SAMPLE LOG FORM

AREA #/NAME S135-CX-001 (Boyd Tisi)

SAMPLE I.D. S135-CX-001

SAMPLE COLLECTION DATE 10/26/2016

SAMPLE COLLECTION TIME 0827

SAMPLE COLLECTED BY W. CAMPBELL

WEATHER CONDITIONS 70's Sunny

FIELD USCS DESCRIPTIONS Fine red sand

MAJOR DIVISIONS: ☐ OH ☐ CH ☐ MH ☐ OH ☐ CL ☐ ML ☐ SC
☒ SM ☐ SP ☐ SW ☐ GC ☐ GM ☐ GP ☐ GW

QUALIFIERS: ☐ TRACE ☐ MINOR ☐ SOME; SAND SIZE ☐ FINE ☐ MEDIUM ☐ COARSE

MOISTURE: ☐ DRY ☒ MOIST ☐ WET

SAMPLE CONTAINERS (NUMBER AND TYPE) 1 Ziplock

ANALYSES: Ra-226, Metals

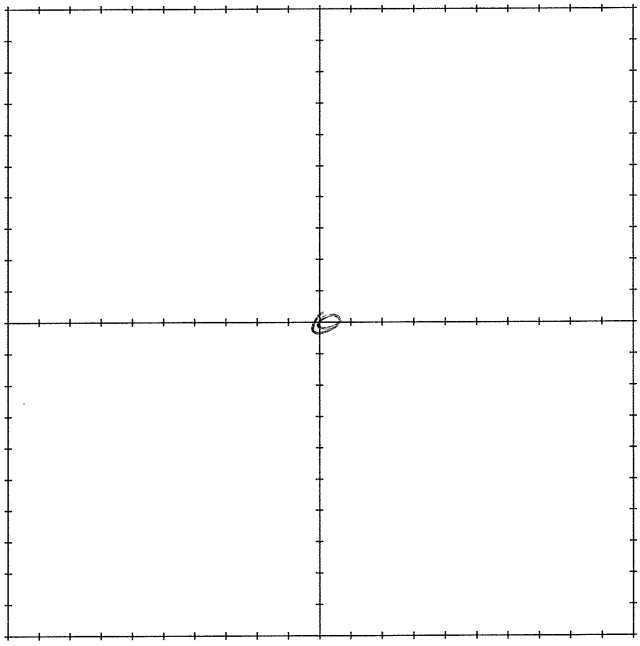

MARK INDIVIDUAL GRAB SAMPLE LOCATIONS IN GRID

SURFACE SOIL SAMPLE LOG FORM

AREA #/NAME: S135-CX-002 (Boyd Tisi)

SAMPLE I.D.: S135-CX-002

SAMPLE COLLECTION DATE: 10/26/2016

SAMPLE COLLECTION TIME: 0854

SAMPLE COLLECTED BY: W. CAMPBELL

WEATHER CONDITIONS: 70s, Sunny

FIELD USCS DESCRIPTIONS: Fine red sand

MAJOR DIVISIONS: ☐ OH ☐ CH ☐ MH ☐ OH ☐ CL ☐ ML ☐ SC
☐ SM ☒ SP ☐ SW ☐ GC ☐ GM ☐ GP ☐ GW

QUALIFIERS: ☒ TRACE ☐ MINOR ☐ SOME; SAND SIZE ☐ FINE ☐ MEDIUM ☐ COARSE

MOISTURE: ☐ DRY ☒ MOIST ☐ WET

SAMPLE CONTAINERS (NUMBER AND TYPE): 1 Ziplock

ANALYSES: Ra-226, Metals

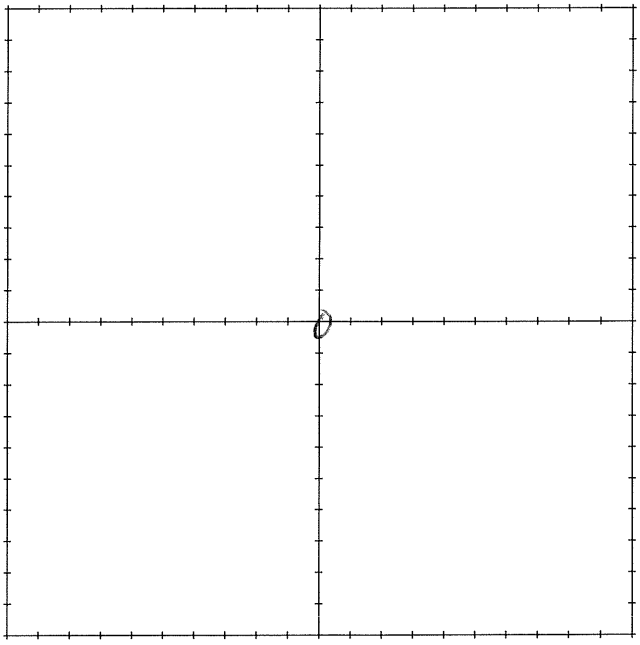

MARK INDIVIDUAL GRAB SAMPLE LOCATIONS IN GRID

SURFACE SOIL SAMPLE LOG FORM

AREA #/NAME: S135-CX-003 (Boyd Tisi)

SAMPLE I.D.: S135-CX-003

SAMPLE COLLECTION DATE: 10/26/2016

SAMPLE COLLECTION TIME: 0935

SAMPLE COLLECTED BY: W. CAMPBELL

WEATHER CONDITIONS: 70s, Sunny

FIELD USCS DESCRIPTIONS: Fine red sand

MAJOR DIVISIONS: ☐ OH ☐ CH ☐ MH ☐ OH ☐ CL ☐ ML ☐ SC
☐ SM ☒ SP ☐ SW ☐ GC ☐ GM ☐ GP ☐ GW

QUALIFIERS: ☒ TRACE ☐ MINOR ☐ SOME; SAND SIZE ☐ FINE ☐ MEDIUM ☐ COARSE

MOISTURE: ☐ DRY ☒ MOIST ☐ WET

SAMPLE CONTAINERS (NUMBER AND TYPE): 1 Ziplock

ANALYSES: Ra-226, Metals

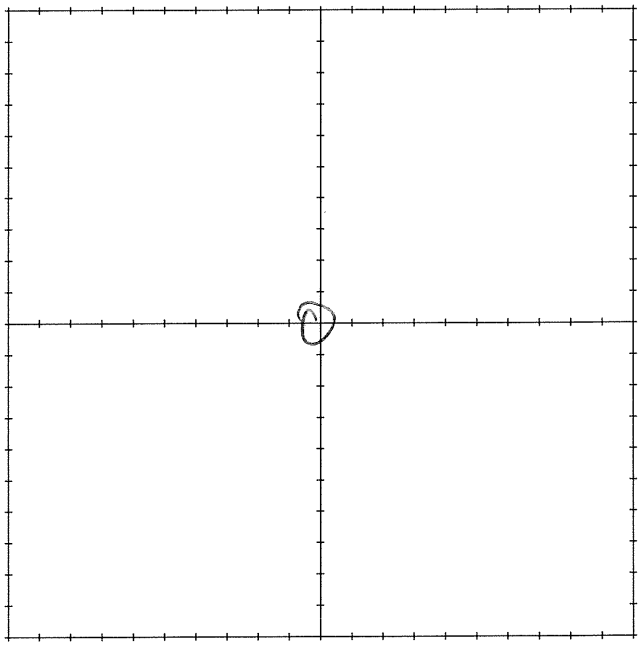

MARK INDIVIDUAL GRAB SAMPLE LOCATIONS IN GRID

SURFACE SOIL SAMPLE LOG FORM

AREA #/NAME: S135-CX-004 (Boyd Tisi)

SAMPLE I.D.: S135-CX-004

SAMPLE COLLECTION DATE: 10/26/2016

SAMPLE COLLECTION TIME: 0945

SAMPLE COLLECTED BY: W. CAMPBELL

WEATHER CONDITIONS: 70's, Sunny

FIELD USCS DESCRIPTIONS: Fine red sand

MAJOR DIVISIONS: ☐ OH ☐ CH ☐ MH ☐ OH ☐ CL ☐ ML ☐ SC
☒ SM ☐ SP ☐ SW ☐ GC ☐ GM ☐ GP ☐ GW

QUALIFIERS: ☐ TRACE ☐ MINOR ☐ SOME; SAND SIZE ☐ FINE ☐ MEDIUM ☐ COARSE

MOISTURE: ☐ DRY ☒ MOIST ☐ WET

SAMPLE CONTAINERS (NUMBER AND TYPE): 1 Ziplock

ANALYSES: Ra-226, metals

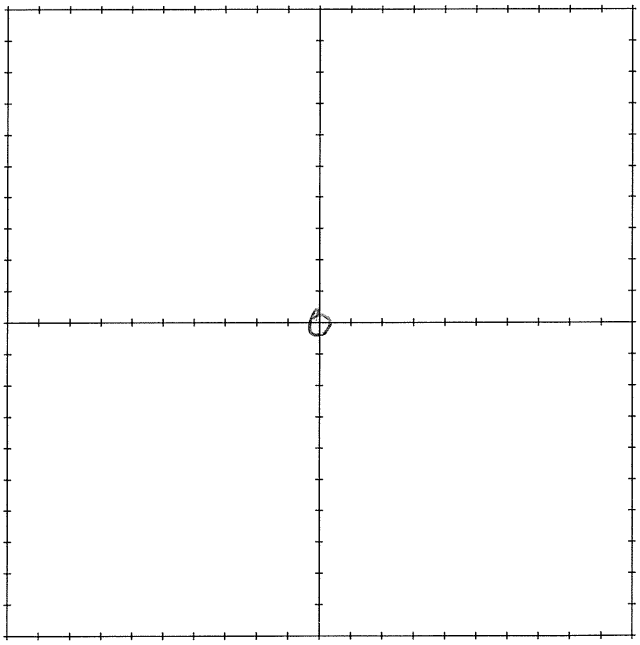

MARK INDIVIDUAL GRAB SAMPLE LOCATIONS IN GRID

SURFACE SOIL SAMPLE LOG FORM

AREA #/NAME S135-CX-005 (Boyd Tisi)

SAMPLE I.D. S135-CX-005

SAMPLE COLLECTION DATE 10/26/2016

SAMPLE COLLECTION TIME 1000

SAMPLE COLLECTED BY W. CAMPBELL

WEATHER CONDITIONS 70's Sunny

FIELD USCS DESCRIPTIONS _____

MAJOR DIVISIONS: ❑ OH ❑ CH ❑ MH ❑ OH ❑ CL ❑ ML ❑ SC
❑ SM ❑ SP ❑ SW ❑ GC ❑ GM ❑ GP ❑ GW

QUALIFIERS: ❑ TRACE ❑ MINOR ❑ SOME; SAND SIZE ❑ FINE ❑ MEDIUM ❑ COARSE

MOISTURE: ❑ DRY ❑ MOIST ❑ WET

SAMPLE CONTAINERS (NUMBER AND TYPE) 1 Ziplock

ANALYSES: Ra-226, Metals

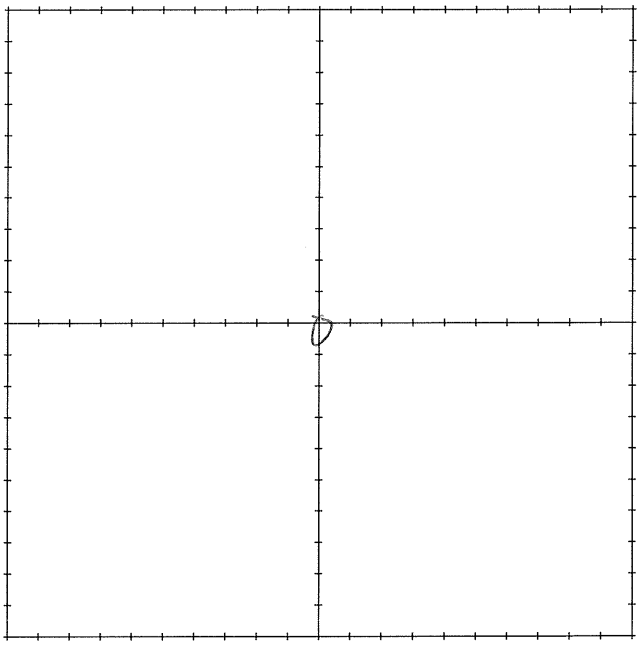

MARK INDIVIDUAL GRAB SAMPLE LOCATIONS IN GRID

SURFACE SOIL SAMPLE LOG FORM

AREA #/NAME S135-CX-006 (Boyd Tisi)

SAMPLE I.D. S135-CX-006

SAMPLE COLLECTION DATE 10/26/2016

SAMPLE COLLECTION TIME 1010

SAMPLE COLLECTED BY W. CAMPBELL

WEATHER CONDITIONS 70s sunny

FIELD USCS DESCRIPTIONS Fine red sand

MAJOR DIVISIONS: ☐ OH ☐ CH ☐ MH ☐ OH ☐ CL ☐ ML ☐ SC
☒ SM ☐ SP ☐ SW ☐ GC ☐ GM ☐ GP ☐ GW

QUALIFIERS: ☐ TRACE ☐ MINOR ☐ SOME; SAND SIZE ☐ FINE ☐ MEDIUM ☐ COARSE

MOISTURE: ☐ DRY ☒ MOIST ☐ WET

SAMPLE CONTAINERS (NUMBER AND TYPE) 1 Ziplock

ANALYSES: Ra-226, Metals

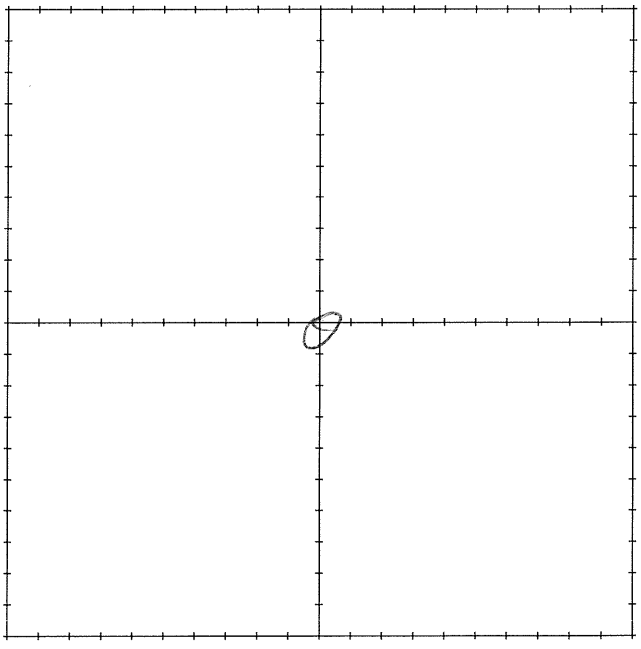

MARK INDIVIDUAL GRAB SAMPLE LOCATIONS IN GRID

SURFACE SOIL SAMPLE LOG FORM

AREA #/NAME S135 - CX - 206 (Boyd Tisi)

SAMPLE I.D. S135 - CX - 206

SAMPLE COLLECTION DATE 10/26/2016

SAMPLE COLLECTION TIME 1010

SAMPLE COLLECTED BY W. CAMPBELL

WEATHER CONDITIONS 70s Sunny

FIELD USCS DESCRIPTIONS Fine red sand

MAJOR DIVISIONS: ☐ OH ☐ CH ☐ MH ☐ OH ☐ CL ☐ ML ☐ SC
☑ SM ☐ SP ☐ SW ☐ GC ☐ GM ☐ GP ☐ GW

QUALIFIERS: ☐ TRACE ☐ MINOR ☐ SOME; SAND SIZE ☐ FINE ☐ MEDIUM ☐ COARSE

MOISTURE: ☐ DRY ☑ MOIST ☐ WET

SAMPLE CONTAINERS (NUMBER AND TYPE) 1 Ziplock

ANALYSES: Ra-226, Metals

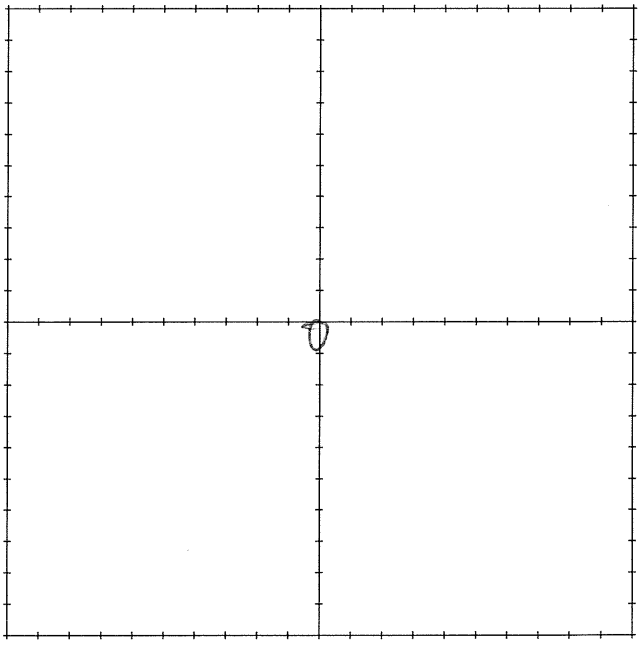

MARK INDIVIDUAL GRAB SAMPLE LOCATIONS IN GRID

SURFACE SOIL SAMPLE LOG FORM

AREA #/NAME S135-CX-007 (Boyd Tisi)

SAMPLE I.D. S135-CX-007

SAMPLE COLLECTION DATE 10/26/2016

SAMPLE COLLECTION TIME 1029

SAMPLE COLLECTED BY W. CAMPBELL

WEATHER CONDITIONS 70s Sunny

FIELD USCS DESCRIPTIONS Red/Brown minor fine gravel (<1/4 in)

MAJOR DIVISIONS: ☐ OH ☐ CH ☐ MH ☐ OH ☐ CL ☐ ML ☐ SC
☐ SM ☒ SP ☐ SW ☐ GC ☐ GM ☐ GP ☐ GW

QUALIFIERS: ☐ TRACE ☒ MINOR ☐ SOME; SAND SIZE ☐ FINE ☐ MEDIUM ☐ COARSE

MOISTURE: ☐ DRY ☒ MOIST ☐ WET

SAMPLE CONTAINERS (NUMBER AND TYPE) 1 Ziplock

ANALYSES: Ra-226, Metals

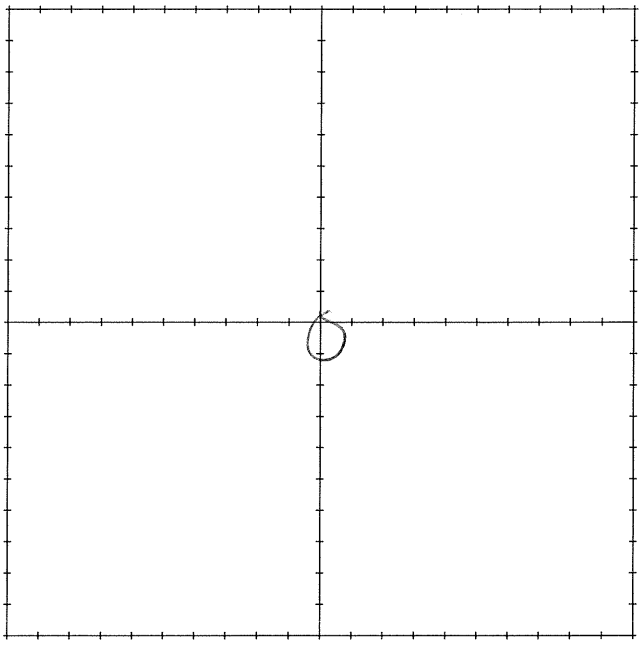

MARK INDIVIDUAL GRAB SAMPLE LOCATIONS IN GRID

SURFACE SOIL SAMPLE LOG FORM

AREA #/NAME S135-CX-008 (Boyd T-51)

SAMPLE I.D. S135-CX-008

SAMPLE COLLECTION DATE 10/26/2016

SAMPLE COLLECTION TIME 1108

SAMPLE COLLECTED BY W. CAMPBELL

WEATHER CONDITIONS 70s Sunny

FIELD USCS DESCRIPTIONS

MAJOR DIVISIONS: ☐ OH ☐ CH ☐ MH ☐ OH ☐ CL ☐ ML ☐ SC
☐ SM ☒ SP ☐ SW ☐ GC ☐ GM ☐ GP ☐ GW

QUALIFIERS: ☒ TRACE ☐ MINOR ☐ SOME; SAND SIZE ☐ FINE ☐ MEDIUM ☐ COARSE

MOISTURE: ☐ DRY ☒ MOIST ☐ WET

SAMPLE CONTAINERS (NUMBER AND TYPE) 1 Ziplock

ANALYSES: Ra-226, metals

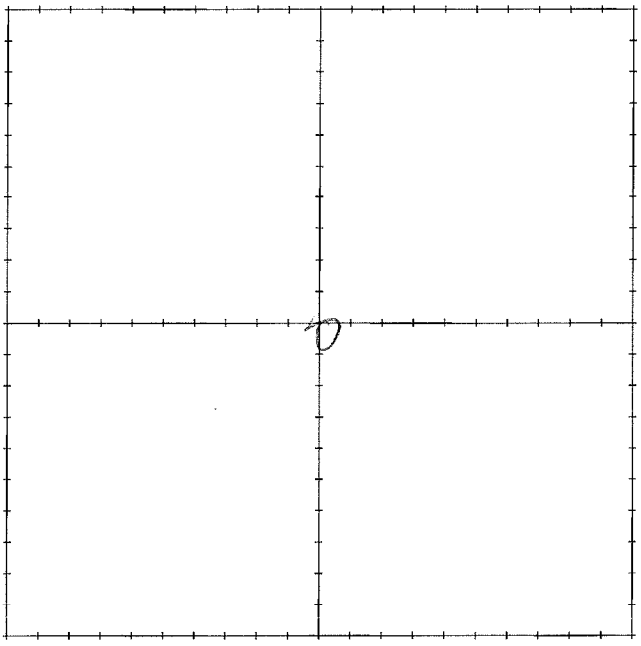

MARK INDIVIDUAL GRAB SAMPLE LOCATIONS IN GRID

SURFACE SOIL SAMPLE LOG FORM

AREA #/NAME S135-CX-009 (Boyd Tisi)

SAMPLE I.D. S135-CX-009

SAMPLE COLLECTION DATE 10/26/2016

SAMPLE COLLECTION TIME 1119

SAMPLE COLLECTED BY W. CAMPBELL

WEATHER CONDITIONS 70s Sunny

FIELD USCS DESCRIPTIONS Fine sed sand

MAJOR DIVISIONS: ☐ OH ☐ CH ☐ MH ☐ OH ☐ CL ☐ ML ☐ SC
☐ SM ☒ SP ☐ SW ☐ GC ☐ GM ☐ GP ☐ GW

QUALIFIERS: ☒ TRACE ☐ MINOR ☐ SOME; SAND SIZE ☐ FINE ☐ MEDIUM ☐ COARSE

MOISTURE: ☐ DRY ☒ MOIST ☐ WET

SAMPLE CONTAINERS (NUMBER AND TYPE) 1 Ziplock

ANALYSES: Ra-226, Metals

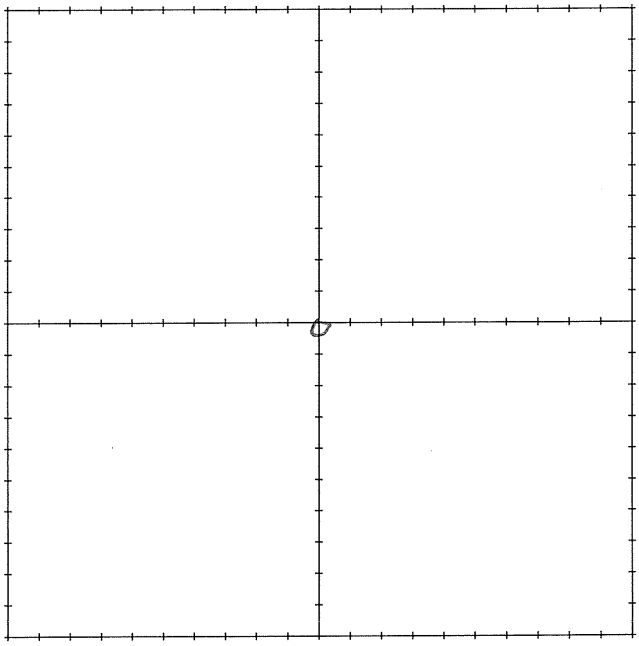

MARK INDIVIDUAL GRAB SAMPLE LOCATIONS IN GRID

SURFACE SOIL SAMPLE LOG FORM

AREA #/NAME S135-CX-010 (Boyd TISI)

SAMPLE I.D. S135-CX-010

SAMPLE COLLECTION DATE 10/26/2016

SAMPLE COLLECTION TIME 1130

SAMPLE COLLECTED BY W. CAMPBELL

WEATHER CONDITIONS 70s SUNNY

FIELD USCS DESCRIPTIONS Fine red sand sand

MAJOR DIVISIONS: ☐ OH ☐ CH ☐ MH ☐ OH ☐ CL ☐ ML ☐ SC
☐ SM ☒ SP ☐ SW ☐ GC ☐ GM ☐ GP ☐ GW

QUALIFIERS: ☒ TRACE ☐ MINOR ☐ SOME; SAND SIZE ☐ FINE ☐ MEDIUM ☐ COARSE

MOISTURE: ☐ DRY ☑ MOIST ☐ WET

SAMPLE CONTAINERS (NUMBER AND TYPE) 1 Ziplock

ANALYSES: RA-226, Metals

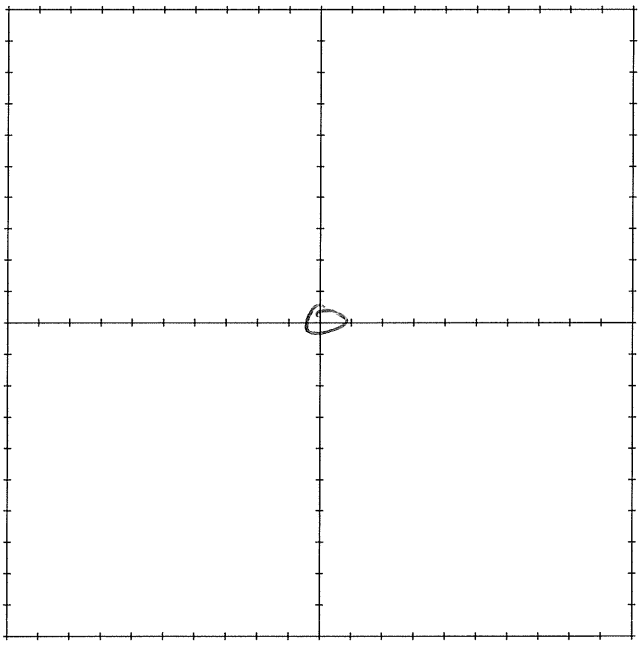

MARK INDIVIDUAL GRAB SAMPLE LOCATIONS IN GRID

C.2 Drilling and Hand Auger Borehole Logs

Stantec

NAVAJO NATION
AUM Environmental Response Trust-First Phase

BOREHOLE ID: **S135-SCX-001 (BG-1)**
CLIENT: NNAUMERT
PROJECT: Removal Site Evaluation
SITE LOCATION: Boyd Tisi No. 2 Western

DRILLING CONTRACTOR: Stantec
DRILLING METHOD: Hand auger
DRILLING EQUIPMENT: Hand auger
SAMPLING METHOD: Regular hand auger, 3 inch diameter

COORDINATE SYSTEM: NAD 1983 UTM Zone 12N
EASTING: 466692.82 NORTHING: 3968478.22
DATE STARTED: 10/26/2016 DATE FINISHED: 10/26/2016
TOTAL DEPTH (ft.): 1 BOREHOLE ANGLE: 90 degrees
LOGGED BY: Luis Rodriguez

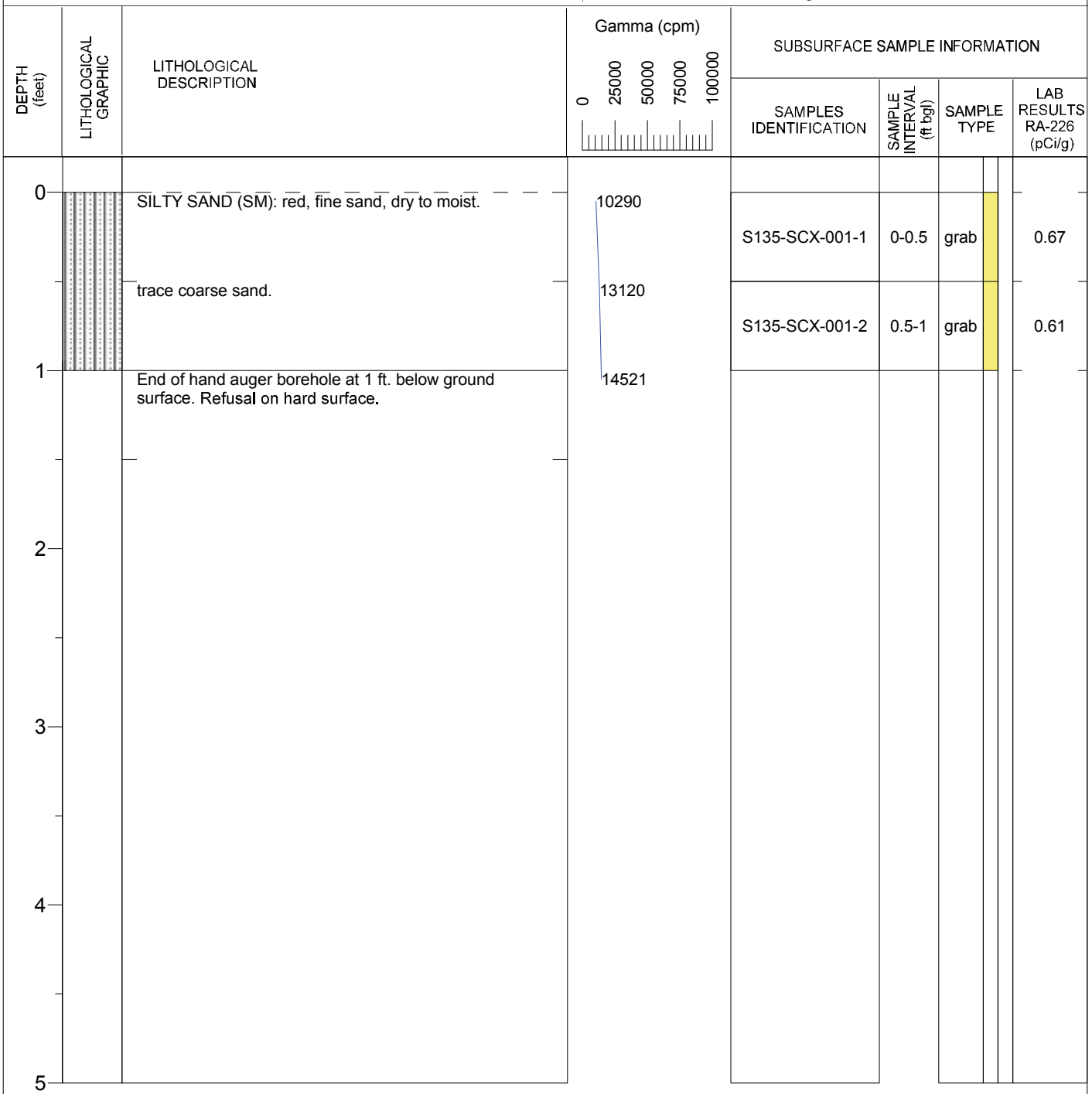

Notes: cpm = counts per minute
pCi/g = picocuries per gram
grab = grab sample
comp = composite sample

Stantec

NAVAJO NATION
AUM Environmental Response Trust-First Phase

BOREHOLE ID: **S135-SCX-002 (BG-2)**
CLIENT: NNAUMERT
PROJECT: Removal Site Evaluation
SITE LOCATION: Boyd Tisi No. 2 Western

DRILLING CONTRACTOR: Stantec
DRILLING METHOD: Hand auger
DRILLING EQUIPMENT: Hand auger
SAMPLING METHOD: Regular hand auger, 3 inch diameter

COORDINATE SYSTEM: NAD 1983 UTM Zone 12N
EASTING: 467209.17 NORTHING: 3969063.44
DATE STARTED: 10/26/2016 DATE FINISHED: 10/26/2016
TOTAL DEPTH (ft.): 2 BOREHOLE ANGLE: 90 degrees
LOGGED BY: Luis Rodriguez

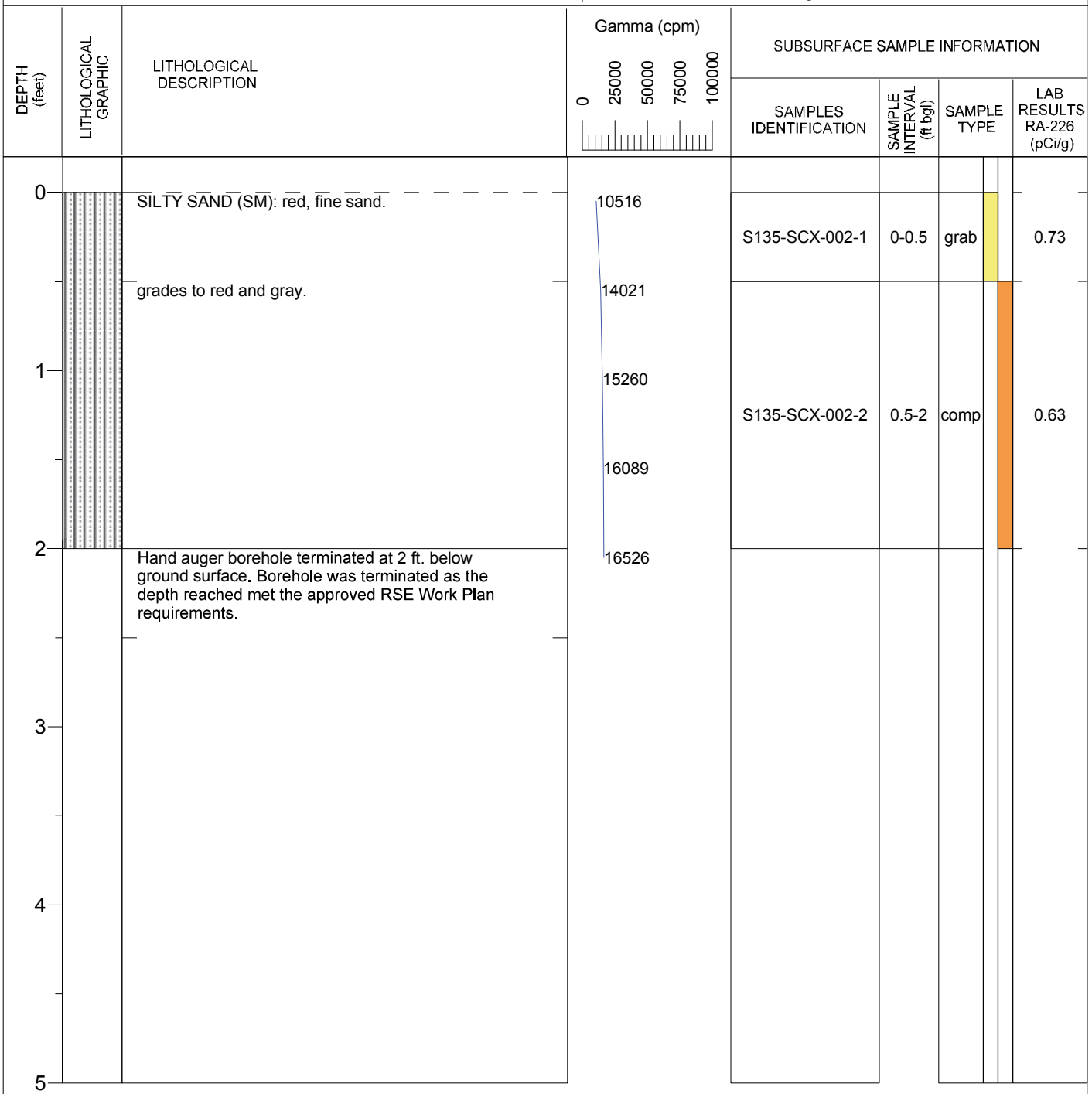

Notes: cpm = counts per minute
pCi/g = picocuries per gram
grab = grab sample
comp = composite sample

Stantec

NAVAJO NATION
AUM Environmental Response Trust-First Phase

BOREHOLE ID: **S135-BG3-011**
CLIENT: NNAUMERT
PROJECT: Removal Site Evaluation
SITE LOCATION: Boyd Tisi No. 2 Western

DRILLING CONTRACTOR: Stantec
DRILLING METHOD: Hand auger
DRILLING EQUIPMENT: Hand auger
SAMPLING METHOD: Regular hand auger, 3 inch diameter

COORDINATE SYSTEM: NAD 1983 UTM Zone 12N
EASTING: 466719.595 NORTHING: 3969087.285
DATE STARTED: 3/17/2017 DATE FINISHED: 3/17/2017
TOTAL DEPTH (ft.): 0.9 BOREHOLE ANGLE: 90 degrees
LOGGED BY: Justin Peterson

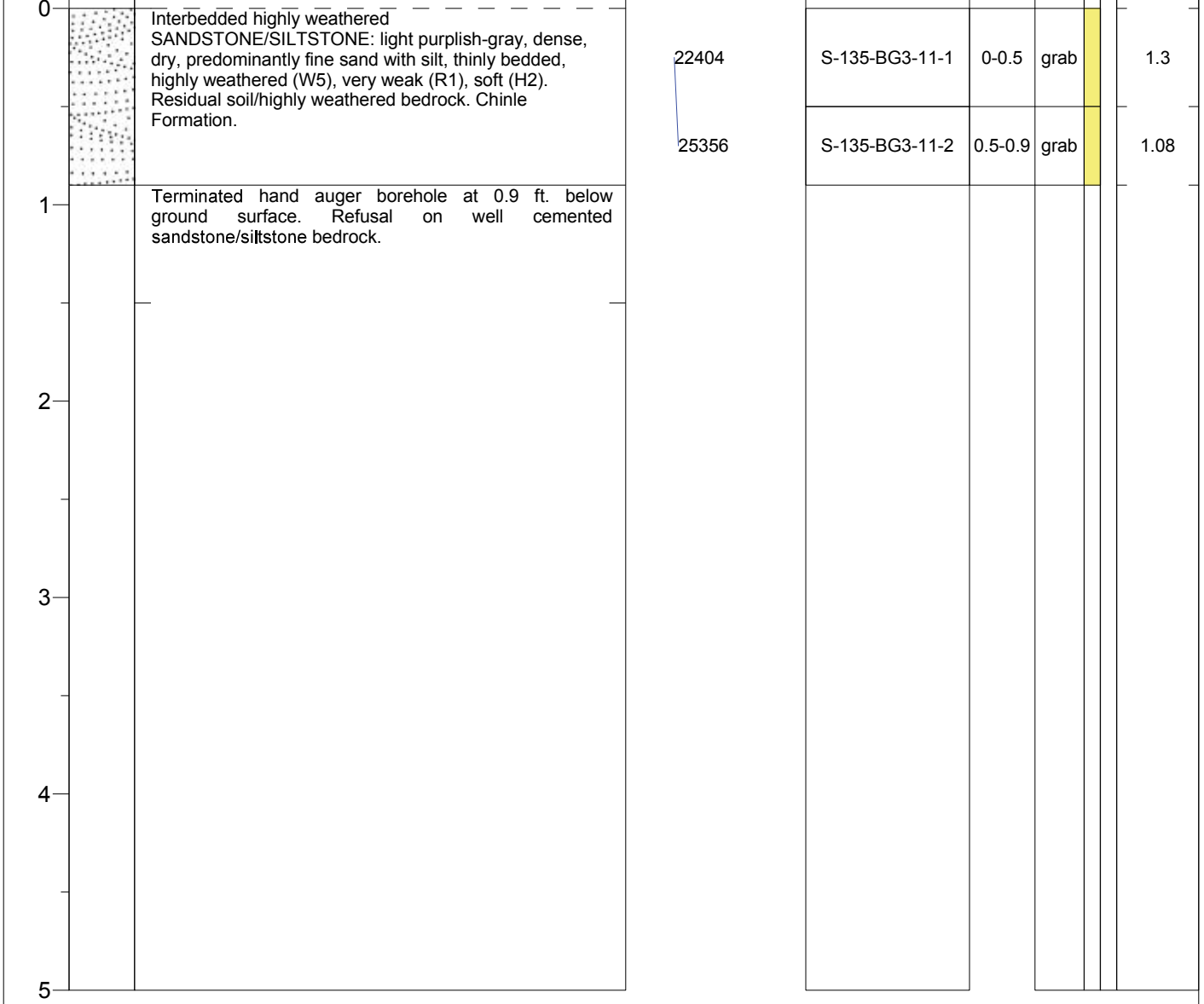

Notes: cpm = counts per minute
pCi/g = picocuries per gram
grab = grab sample
comp = composite sample

Stantec

NAVAJO NATION
AUM Environmental Response Trust-First Phase

BOREHOLE ID: **S135-BG4-011**
CLIENT: NNAUMERT
PROJECT: Removal Site Evaluation
SITE LOCATION: Boyd Tisi No. 2 Western

DRILLING CONTRACTOR: Stantec
DRILLING METHOD: Hand auger
DRILLING EQUIPMENT: Hand auger
SAMPLING METHOD: Regular hand auger, 3 inch diameter

COORDINATE SYSTEM: NAD 1983 UTM Zone 12N
EASTING: 466727.03 NORTHING: 3968374.53
DATE STARTED: 3/17/2017 DATE FINISHED: 3/17/2017
TOTAL DEPTH (ft.): 0.7 BOREHOLE ANGLE: 90 degrees
LOGGED BY: Justin Peterson

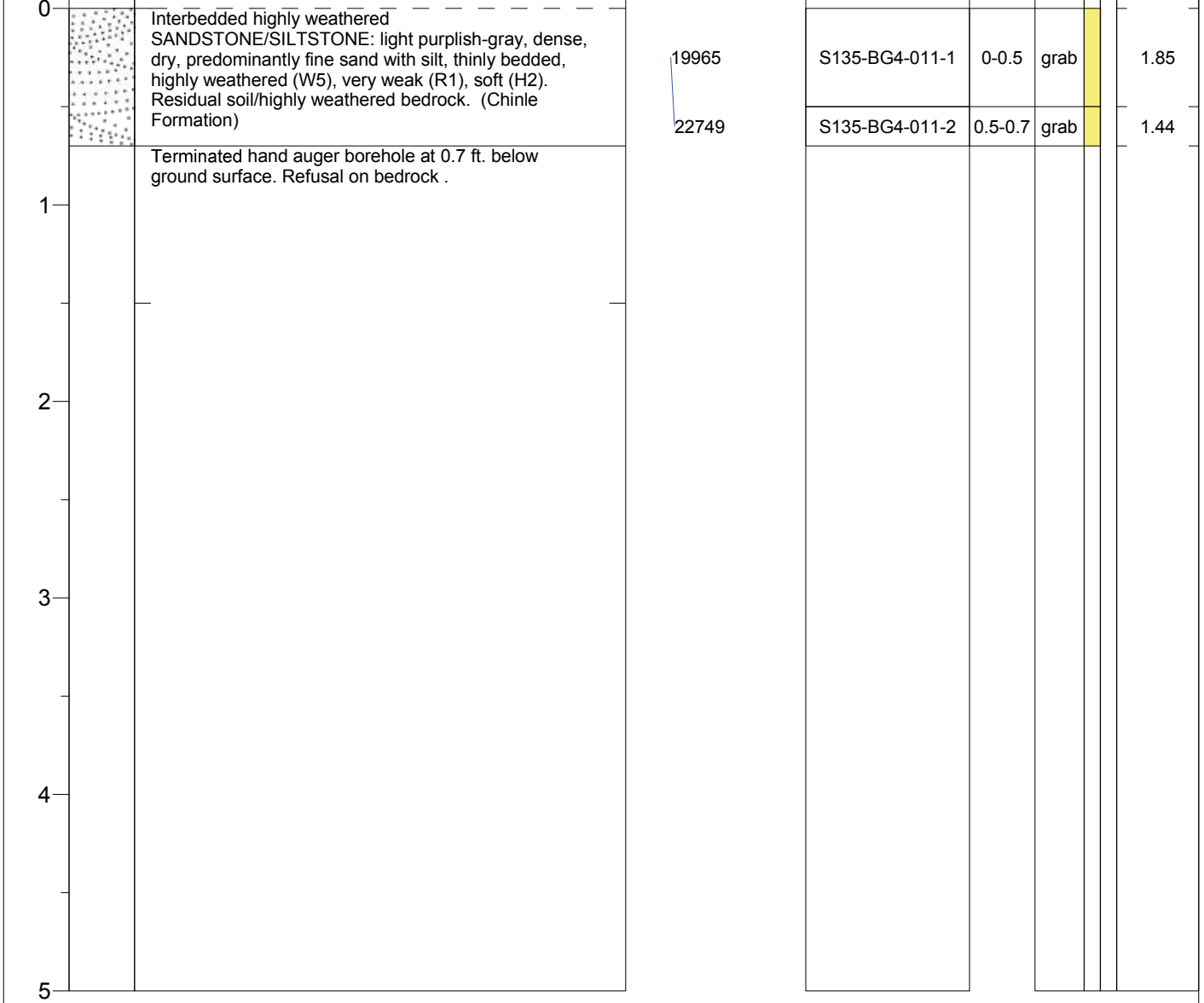

Notes: cpm = counts per minute
pCi/g = picocuries per gram
grab = grab sample
comp = composite sample

Stantec

NAVAJO NATION
AUM Environmental Response Trust-First Phase

BOREHOLE ID: **S135-SCX-003**
CLIENT: NNAUMERT
PROJECT: Removal Site Evaluation
SITE LOCATION: Boyd Tisi No. 2 Western

DRILLING CONTRACTOR: Stantec
DRILLING METHOD: Hand auger
DRILLING EQUIPMENT: Hand auger
SAMPLING METHOD: Regular hand auger, 3 inch diameter

COORDINATE SYSTEM: NAD 1983 UTM Zone 12N
EASTING: 466589.54 NORTHING: 3968828.35
DATE STARTED: 10/26/2016 DATE FINISHED: 10/26/2016
TOTAL DEPTH (ft.): 0.25 BOREHOLE ANGLE: 90 degrees
LOGGED BY: Luis Rodriguez

DEPTH (feet)	LITHOLOGICAL GRAPHIC	LITHOLOGICAL DESCRIPTION	Gamma (cpm) 0 25000 50000 75000 100000	SUBSURFACE SAMPLE INFORMATION: SAMPLES IDENTIFICATION	SAMPLE INTERVAL (ft bgl)	SAMPLE TYPE	LAB RESULTS RA-226 (pCi/g)
0		POORLY GRADED SAND WITH SILT (SP-SM): fine sands, few gravel.		S135-SCX-003	0-0.25	grab	9.7
		End of hand auger borehole at 0.25 ft. below ground surface. Refusal on bedrock.	47000				
1							
2							
3							
4							
5							

Notes: cpm = counts per minute
pCi/g = picocuries per gram
grab = grab sample
comp = composite sample

Stantec

NAVAJO NATION
AUM Environmental Response Trust-First Phase

BOREHOLE ID: **S135-SCX-004**
CLIENT: NNAUMERT
PROJECT: Removal Site Evaluation
SITE LOCATION: Boyd Tisi No. 2 Western

DRILLING CONTRACTOR: Stantec
DRILLING METHOD: Hand auger
DRILLING EQUIPMENT: Hand auger
SAMPLING METHOD: Regular hand auger, 3 inch diameter

COORDINATE SYSTEM: NAD 1983 UTM Zone 12N
EASTING: 466569.62 NORTHING: 3968796.12
DATE STARTED: 10/26/2016 DATE FINISHED: 10/26/2016
TOTAL DEPTH (ft.): 1 BOREHOLE ANGLE: 90 degrees
LOGGED BY: Luis Rodriguez

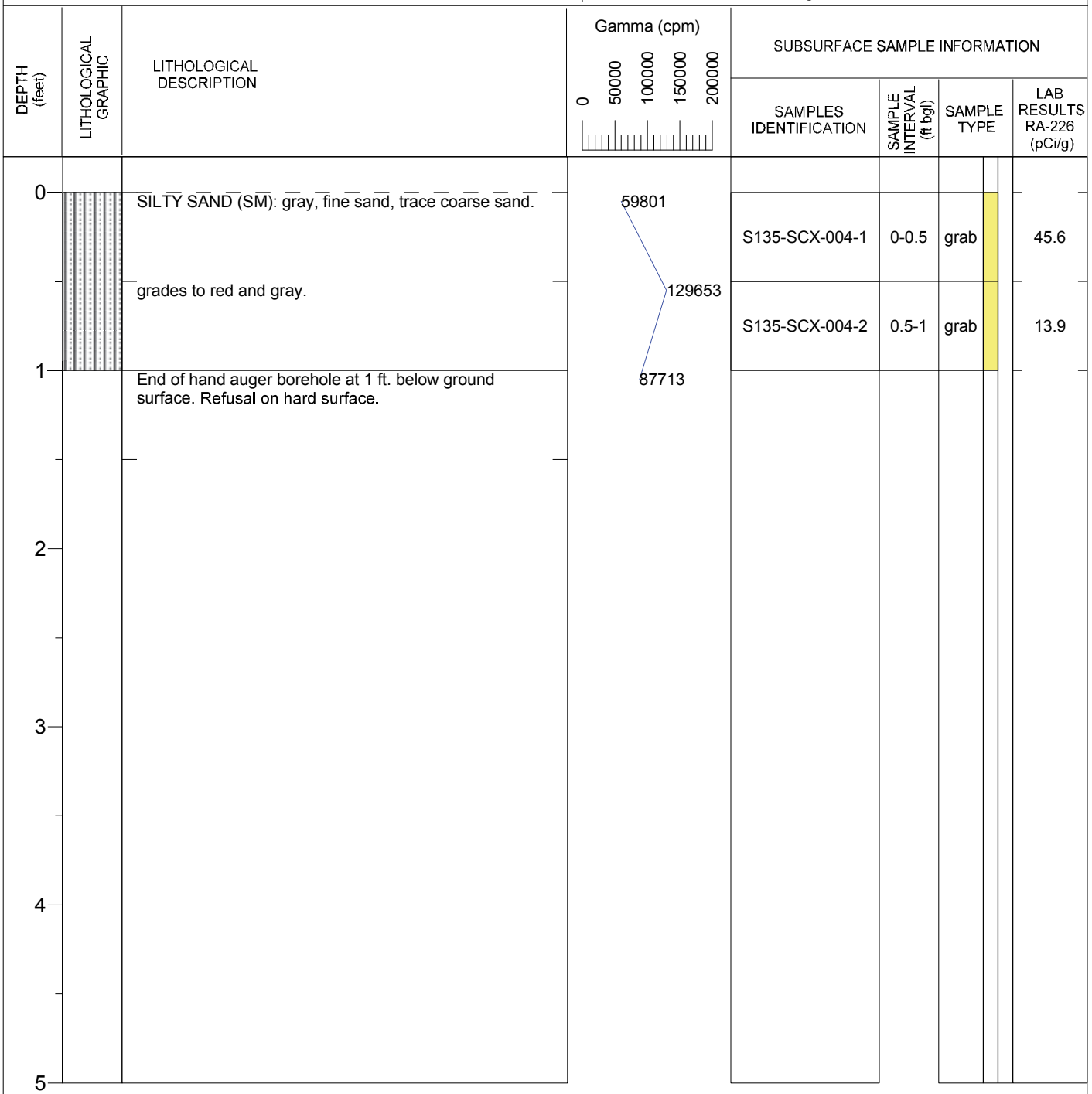

Notes: cpm = counts per minute
pCi/g = picocuries per gram
grab = grab sample
comp = composite sample

Stantec

NAVAJO NATION
AUM Environmental Response Trust-First Phase

BOREHOLE ID: **S135-SCX-005**
CLIENT: NNAUMERT
PROJECT: Removal Site Evaluation
SITE LOCATION: Boyd Tisi No. 2 Western

DRILLING CONTRACTOR: Stantec
DRILLING METHOD: Hand auger
DRILLING EQUIPMENT: Hand auger
SAMPLING METHOD: Regular hand auger, 3 inch diameter

COORDINATE SYSTEM: NAD 1983 UTM Zone 12N
EASTING: 466551.83 NORTHING: 3968806.81
DATE STARTED: 10/26/2016 DATE FINISHED: 10/26/2016
TOTAL DEPTH (ft.): 1.2 BOREHOLE ANGLE: 90 degrees
LOGGED BY: Luis Rodriguez

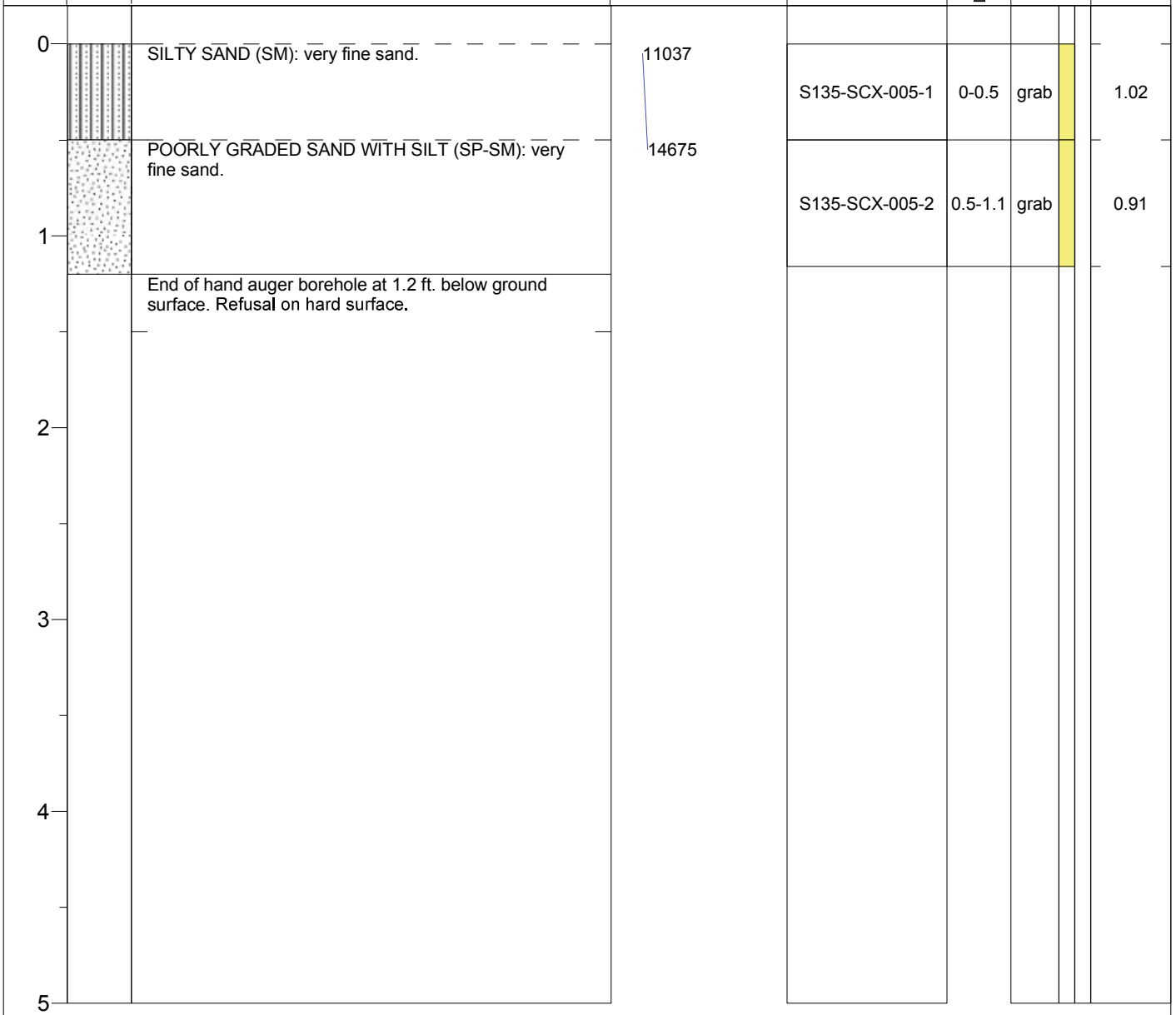

Notes: cpm = counts per minute
pCi/g = picocuries per gram
grab = grab sample
comp = composite sample

Stantec

NAVAJO NATION
AUM Environmental Response Trust-First Phase

BOREHOLE ID: **S135-SCX-006**
CLIENT: NNAUMERT
PROJECT: Removal Site Evaluation
SITE LOCATION: Boyd Tisi no. 2

DRILLING CONTRACTOR: National Drilling
DRILLING METHOD: Rotary Sonic
DRILLING EQUIPMENT: Geoprobe 8140LC
SAMPLING METHOD: Sonic Core Barrel, 4 inch diameter

COORDINATE SYSTEM: NAD 1983 UTM Zone 12N
EASTING: 466692.81 NORTHING: 3968852.04
DATE STARTED: 11/11/2016 DATE FINISHED: 11/12/2016
TOTAL DEPTH (ft.): 24 BOREHOLE ANGLE: 90 degrees
LOGGED BY: Justin Peterson

DEPTH (feet)	LITHOLOGICAL DESCRIPTION	Gamma (cpm)	SUBSURFACE SAMPLE INFORMATION: SAMPLES IDENTIFICATION	SAMPLE INTERVAL (ft bgl)	SAMPLE TYPE	LAB RESULTS RA-226 (pCi/g)
0	POORLY GRADED SAND (SP): reddish brown, loose, dry, fine sands, 95% fine sands, 5% silts, no visible bedding (eolian sands).		S135-SCX-006-01	0-0.5	grab	0.78
1		12578				
2	grades with increasing medium sand fraction.	15102				
3	Weathered SANDSTONE: purplish-gray, fine to medium-grained sand, highly weathered to decomposed (W4-W5), weak (R2), moderately hard (H4) with calcareous and silica cement. Interbedded shale, limestone and siltstone, very-thin to thickly bedded (<1-inch to >1 ft). Indurated at top.	19474				
4		19696				
5	gray with purple, fine to medium sand, highly weathered (W4), weak (R2), moderately hard (H4), calcareous and silica cementation, bedded with laminations, beds ranging from less than 1 inch to greater than 1 inch, composed of shale, limestone, siltstone, bedding are decomposed to residual soils (W5) and covered by capstone.	19784				
6						
7	Poor recovery from 5 ft. to 10 ft. below ground surface. Sample material fell out of core barrel.	21028				
8	grades to buff.	21204				
9	grades to well indurated.	20928				
10	poorly indurated siltstone beds.	17088				
11	light reddish brown.	15872				
12		15980	S135-SCX-006-02	1-23	comp	1.07
13		15000				

Gamma (cpm) scale: 0, 25000, 50000, 75000, 100000

Notes: cpm = counts per minute
pCi/g = picocuries per gram
grab = grab sample
comp = composite sample

Stantec

NAVAJO NATION
AUM Environmental Response Trust-First Phase

BOREHOLE ID: **S135-SCX-006**
CLIENT: NNAUMERT
PROJECT: Removal Site Evaluation
SITE LOCATION: Boyd Tisi no. 2

DRILLING CONTRACTOR: National Drilling
DRILLING METHOD: Rotary Sonic
DRILLING EQUIPMENT: Geoprobe 8140LC
SAMPLING METHOD: Sonic Core Barrel, 4 inch diameter

COORDINATE SYSTEM: NAD 1983 UTM Zone 12N
EASTING: 466692.81 NORTHING: 3968852.04
DATE STARTED: 11/11/2016 DATE FINISHED: 11/12/2016
TOTAL DEPTH (ft.): 24 BOREHOLE ANGLE: 90 degrees
LOGGED BY: Justin Peterson

DEPTH (feet)	LITHOLOGICAL GRAPHIC	LITHOLOGICAL DESCRIPTION	Gamma (cpm) 0 25000 50000 75000 100000	SUBSURFACE SAMPLE INFORMATION: SAMPLES IDENTIFICATION	SAMPLE INTERVAL (ft bgl)	SAMPLE TYPE	LAB RESULTS RA-226 (pCi/g)
14		buff colored.	15138				
			15402				
15		increase in limestone gravels.	15640				
16			15040				
17			14966				
18		light pink, reddish brown.	14482				
19		1 ft., bed of medium grained sandstone.					
			14380				
20			14148				
21		limestone bed/gravels, well indurated.	14916				
22		medium grained sandstone.	17172				
23		buff colored sandstone with silt mix.	19466				
24		Terminated borehole at 24 ft. below ground surface in bedrock.					
25							

Notes: cpm = counts per minute
pCi/g = picocuries per gram
grab = grab sample
comp = composite sample

Stantec

NAVAJO NATION
AUM Environmental Response Trust-First Phase

BOREHOLE ID: **S135-SCX-007**
CLIENT: NNAUMERT
PROJECT: Removal Site Evaluation
SITE LOCATION: Boyd Tisi no. 2

DRILLING CONTRACTOR: National Drilling
DRILLING METHOD: Rotary Sonic
DRILLING EQUIPMENT: Geoprobe 8140LC
SAMPLING METHOD: Sonic Core Barrel, 4 inch diameter

COORDINATE SYSTEM: NAD 1983 UTM Zone 12N
EASTING: 466691 NORTHING: 3968819.99
DATE STARTED: 11/12/2016 DATE FINISHED: 11/12/2016
TOTAL DEPTH (ft.): 10 BOREHOLE ANGLE: 90 degrees
LOGGED BY: Justin Peterson

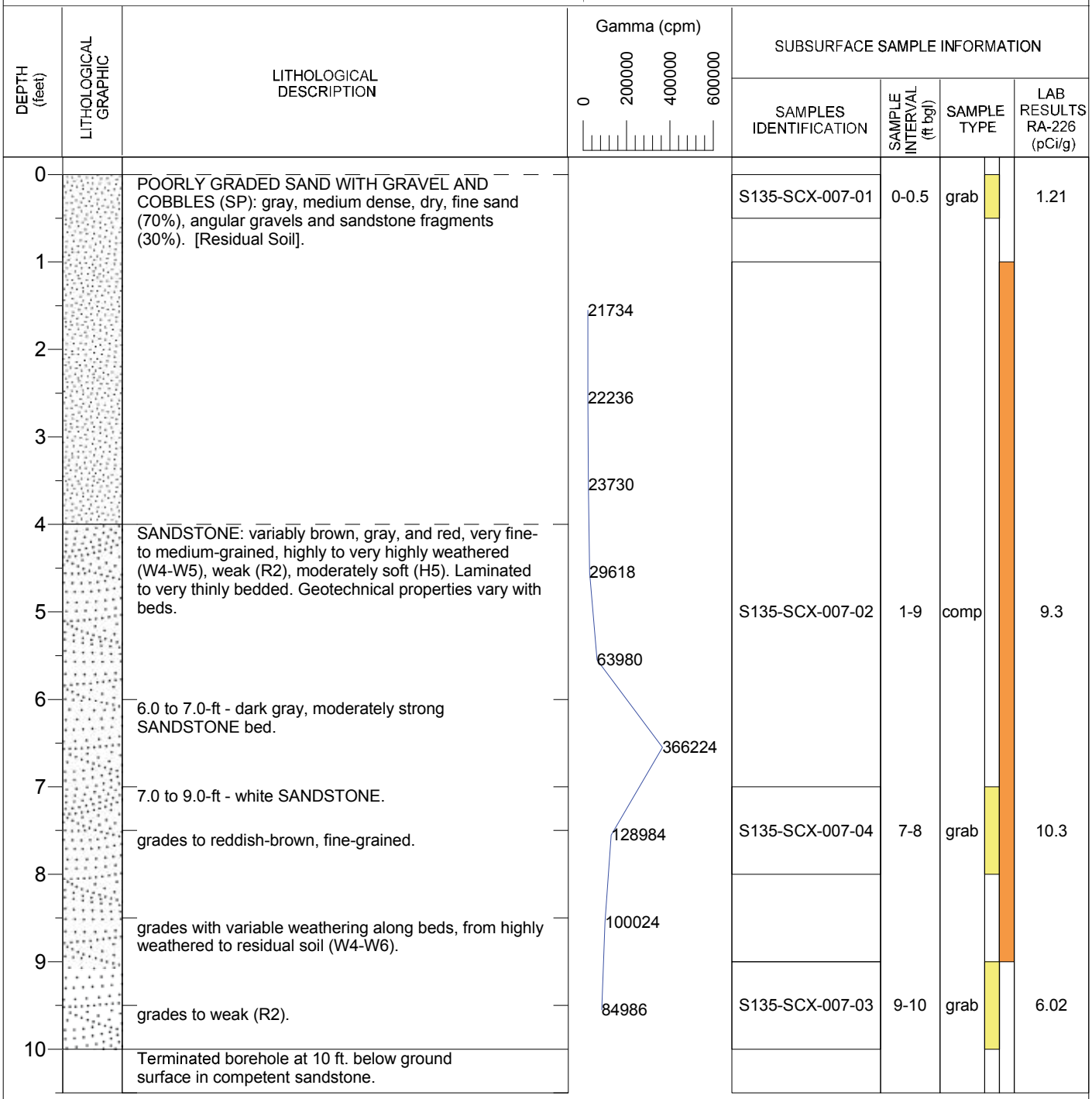

Notes: cpm = counts per minute
pCi/g = picocuries per gram
grab = grab sample
comp = composite sample

Stantec

NAVAJO NATION
AUM Environmental Response Trust-First Phase

BOREHOLE ID: **S135-SCX-008**
CLIENT: NNAUMERT
PROJECT: Removal Site Evaluation
SITE LOCATION: Boyd Tisi no. 2

DRILLING CONTRACTOR: National Drilling
DRILLING METHOD: Rotary Sonic
DRILLING EQUIPMENT: Geoprobe 8140LC
SAMPLING METHOD: Sonic Core Barrel, 4 inch diameter

COORDINATE SYSTEM: NAD 1983 UTM Zone 12N
EASTING: 466654.96 NORTHING: 3968814.91
DATE STARTED: 11/12/2016 DATE FINISHED: 11/12/2016
TOTAL DEPTH (ft.): 5 BOREHOLE ANGLE: 90 degrees
LOGGED BY: Justin Peterson

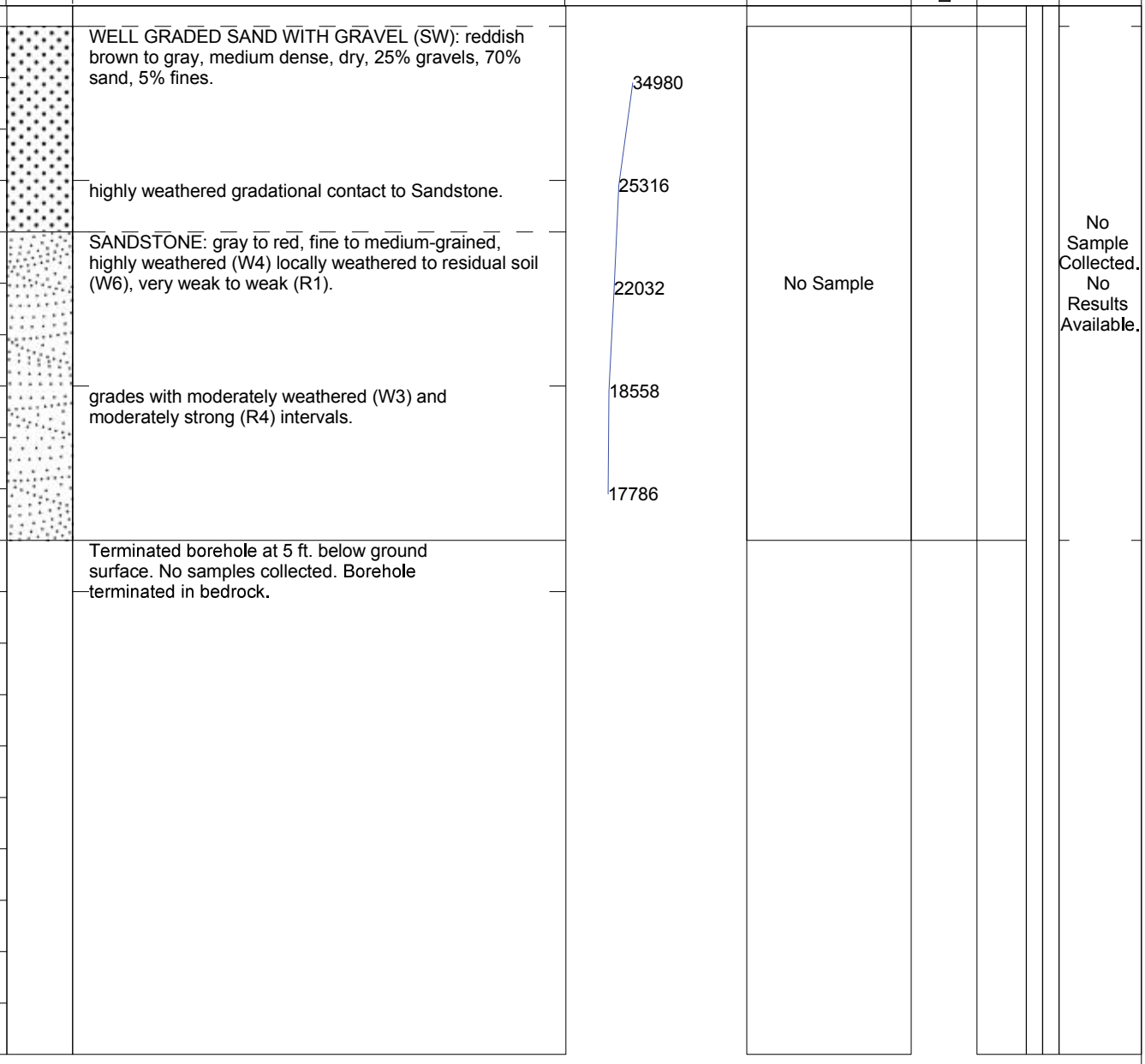

Notes: cpm = counts per minute
pCi/g = picocuries per gram
grab = grab sample
comp = composite sample

Stantec

NAVAJO NATION
AUM Environmental Response Trust-First Phase

BOREHOLE ID: **S135-SCX-009**
CLIENT: NNAUMERT
PROJECT: Removal Site Evaluation
SITE LOCATION: Boyd Tisi no. 2

DRILLING CONTRACTOR: National Drilling
DRILLING METHOD: Rotary Sonic
DRILLING EQUIPMENT: Geoprobe 8140LC
SAMPLING METHOD: Sonic Core Barrel, 4 inch diameter

COORDINATE SYSTEM: NAD 1983 UTM Zone 12N
EASTING: 466651.48 NORTHING: 3968849.53
DATE STARTED: 11/12/2016 DATE FINISHED: 11/12/2016
TOTAL DEPTH (ft.): 7.5 BOREHOLE ANGLE: 90 degrees
LOGGED BY: Justin Peterson

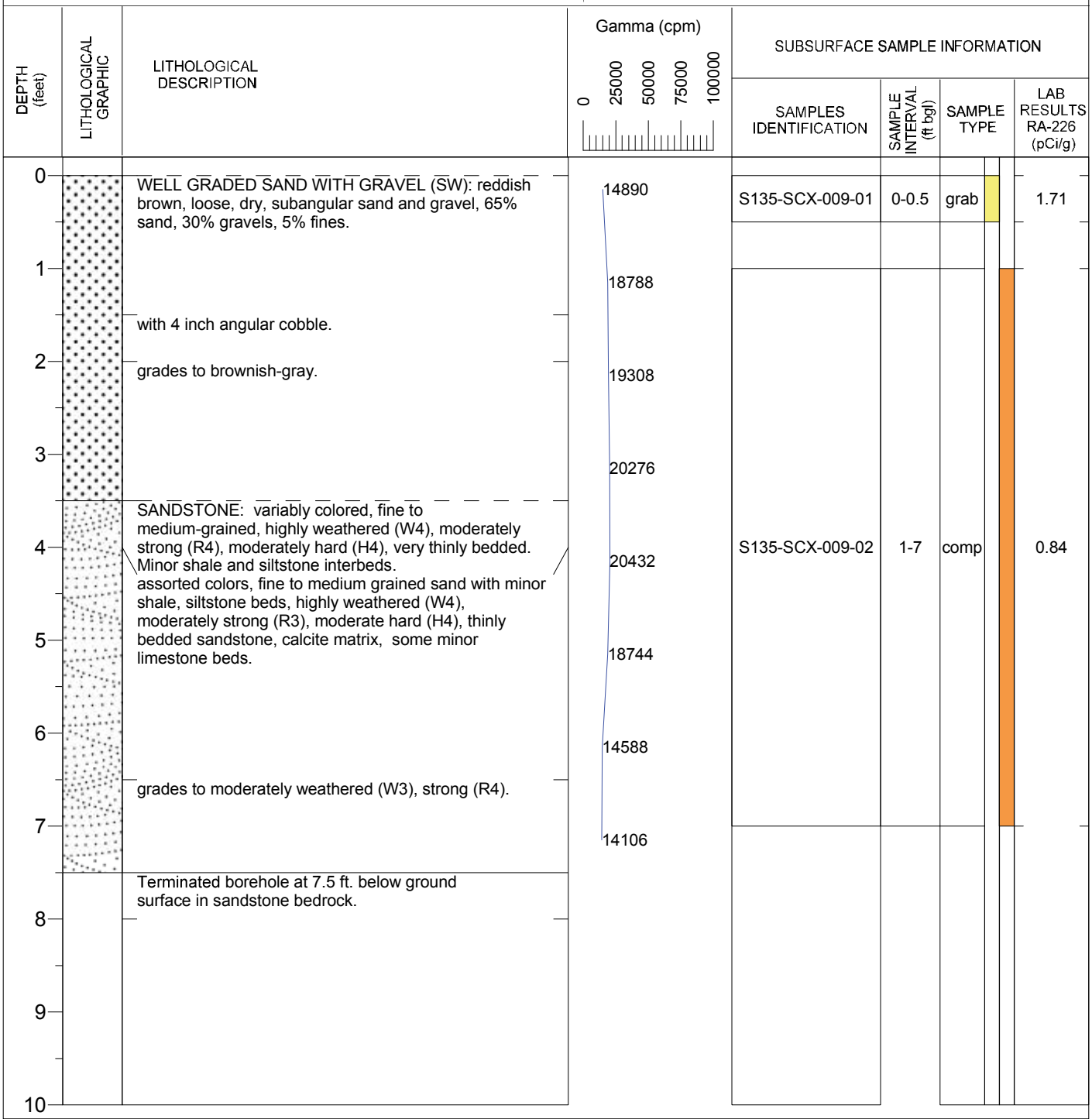

Notes: cpm = counts per minute
pCi/g = picocuries per gram
grab = grab sample
comp = composite sample

Stantec

NAVAJO NATION
AUM Environmental Response Trust-First Phase

BOREHOLE ID: **S135-SCX-010**
CLIENT: NNAUMERT
PROJECT: Removal Site Evaluation
SITE LOCATION: Boyd Tisi no. 2

DRILLING CONTRACTOR: National Drilling
DRILLING METHOD: Rotary Sonic
DRILLING EQUIPMENT: Geoprobe 8140LC
SAMPLING METHOD: Sonic Core Barrel, 4 inch diameter

COORDINATE SYSTEM: NAD 1983 UTM Zone 12N
EASTING: 466609.86 NORTHING: 3968843.75
DATE STARTED: 11/12/2016 DATE FINISHED: 11/12/2016
TOTAL DEPTH (ft.): 4.5 BOREHOLE ANGLE: 90 degrees
LOGGED BY: Justin Peterson

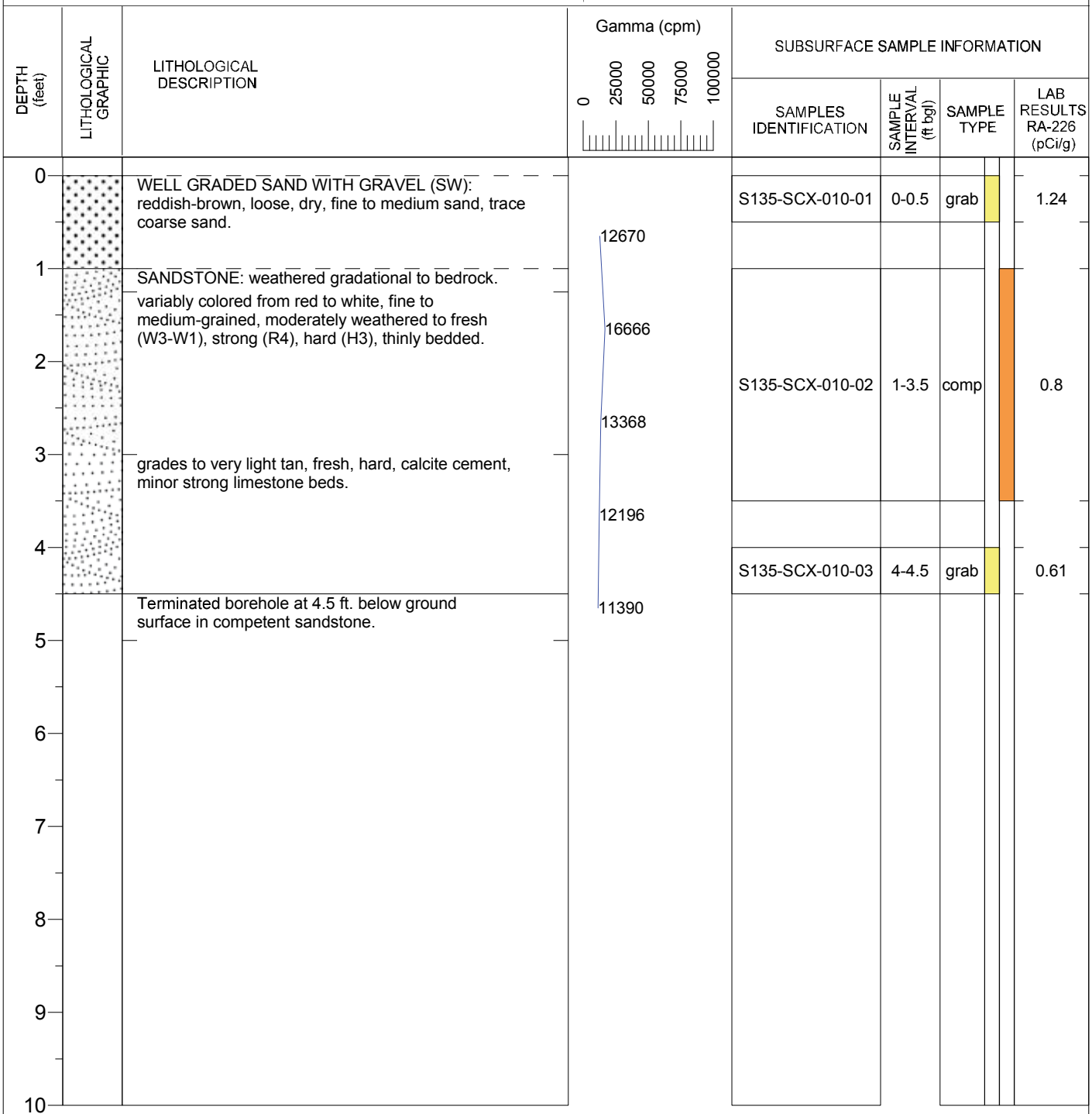

Notes: cpm = counts per minute
pCi/g = picocuries per gram
grab = grab sample
comp = composite sample

Stantec

NAVAJO NATION
AUM Environmental Response Trust-First Phase

BOREHOLE ID: **S135-SCX-011**
CLIENT: NNAUMERT
PROJECT: Removal Site Evaluation
SITE LOCATION: Boyd Tisi no. 2

DRILLING CONTRACTOR: National Drilling
DRILLING METHOD: Rotary Sonic
DRILLING EQUIPMENT: Geoprobe 8140LC
SAMPLING METHOD: Sonic Core Barrel, 4 inch diameter

COORDINATE SYSTEM: NAD 1983 UTM Zone 12N
EASTING: 466566.72 NORTHING: 3968786.54
DATE STARTED: 11/12/2016 DATE FINISHED: 11/12/2016
TOTAL DEPTH (ft.): 4.5 BOREHOLE ANGLE: 90 degrees
LOGGED BY: Justin Peterson

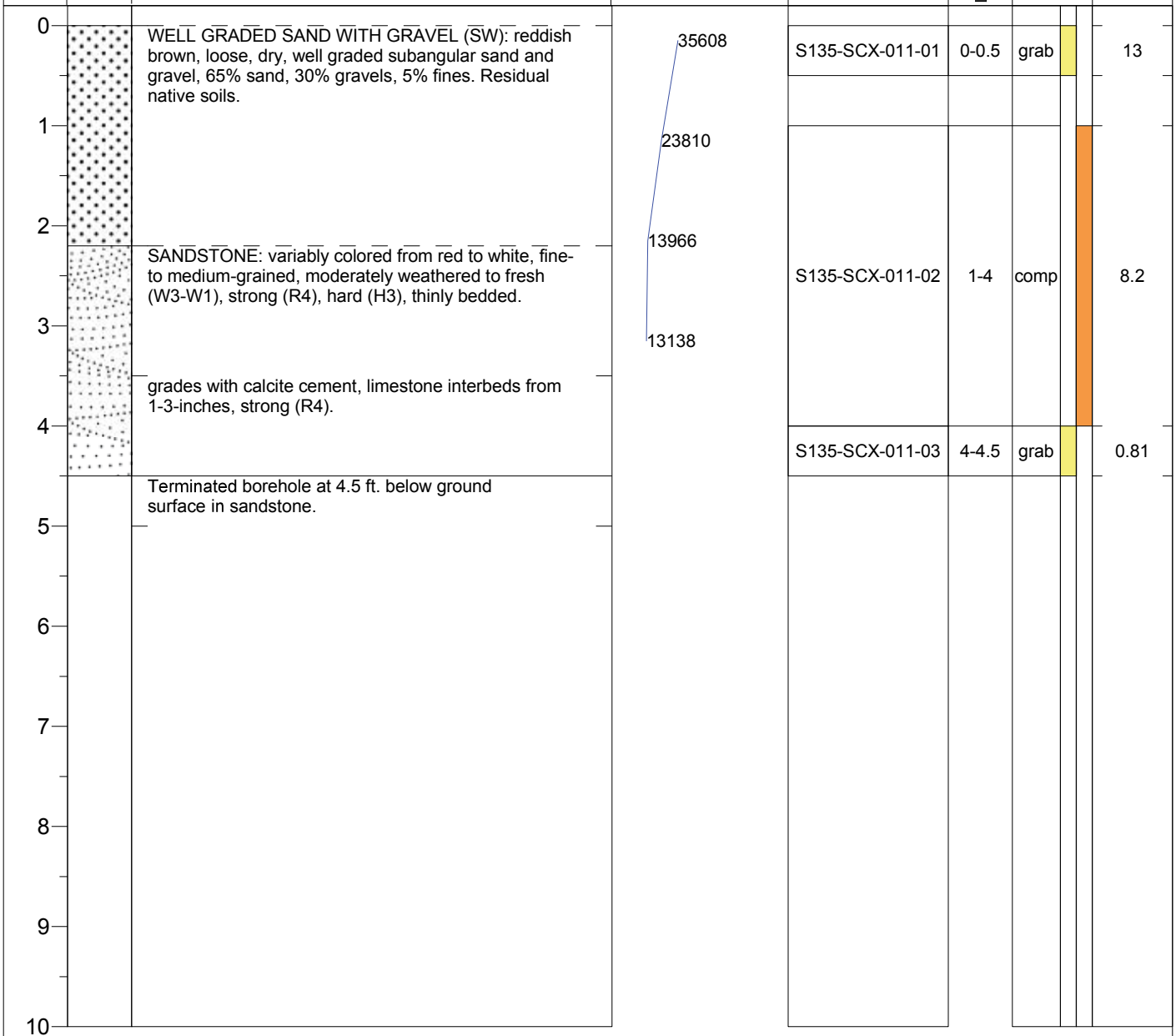

SUBSURFACE SAMPLE INFORMATION

SAMPLES IDENTIFICATION	SAMPLE INTERVAL (ft bgl)	SAMPLE TYPE	LAB RESULTS RA-226 (pCi/g)
S135-SCX-011-01	0-0.5	grab	13
S135-SCX-011-02	1-4	comp	8.2
S135-SCX-011-03	4-4.5	grab	0.81

Notes: cpm = counts per minute
pCi/g = picocuries per gram
grab = grab sample
comp = composite sample

Stantec

NAVAJO NATION
AUM Environmental Response Trust-First Phase

BOREHOLE ID: **S135-SCX-012**
CLIENT: NNAUMERT
PROJECT: Removal Site Evaluation
SITE LOCATION: Boyd Tisi no. 2

DRILLING CONTRACTOR: National Drilling
DRILLING METHOD: Rotary Sonic
DRILLING EQUIPMENT: Geoprobe 8140LC
SAMPLING METHOD: Sonic Core Barrel, 4 inch diameter

COORDINATE SYSTEM: NAD 1983 UTM Zone 12N
EASTING: 466579.13 NORTHING: 3968796.33
DATE STARTED: 11/12/2016 DATE FINISHED: 11/12/2016
TOTAL DEPTH (ft.): 4.5 BOREHOLE ANGLE: 90 degrees
LOGGED BY: Justin Peterson

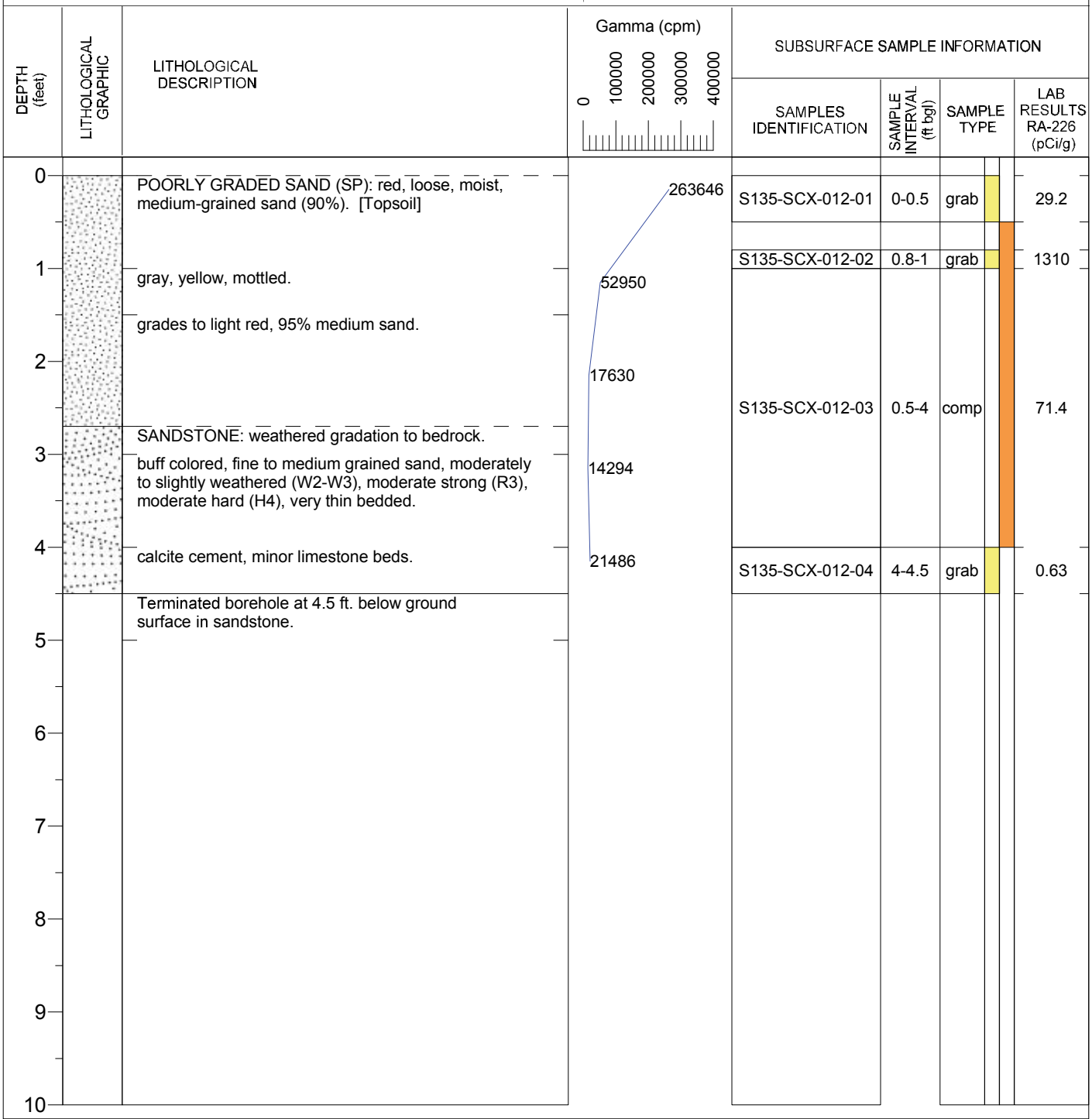

SUBSURFACE SAMPLE INFORMATION

SAMPLES IDENTIFICATION	SAMPLE INTERVAL (ft bgl)	SAMPLE TYPE	LAB RESULTS RA-226 (pCi/g)
S135-SCX-012-01	0-0.5	grab	29.2
S135-SCX-012-02	0.8-1	grab	1310
S135-SCX-012-03	0.5-4	comp	71.4
S135-SCX-012-04	4-4.5	grab	0.63

Notes: cpm = counts per minute
pCi/g = picocuries per gram
grab = grab sample
comp = composite sample

Stantec

NAVAJO NATION
AUM Environmental Response Trust-First Phase

BOREHOLE ID: **S135-SCX-013**
CLIENT: NNAUMERT
PROJECT: Removal Site Evaluation
SITE LOCATION: Boyd Tisi no. 2

DRILLING CONTRACTOR: National Drilling
DRILLING METHOD: Rotary Sonic
DRILLING EQUIPMENT: Geoprobe 8140LC
SAMPLING METHOD: Sonic Core Barrel, 4 inch diameter

COORDINATE SYSTEM: NAD 1983 UTM Zone 12N
EASTING: 466600.95 NORTHING: 3968759.32
DATE STARTED: 11/12/2016 DATE FINISHED: 11/12/2016
TOTAL DEPTH (ft.): 4.5 BOREHOLE ANGLE: 90 degrees
LOGGED BY: Justin Peterson

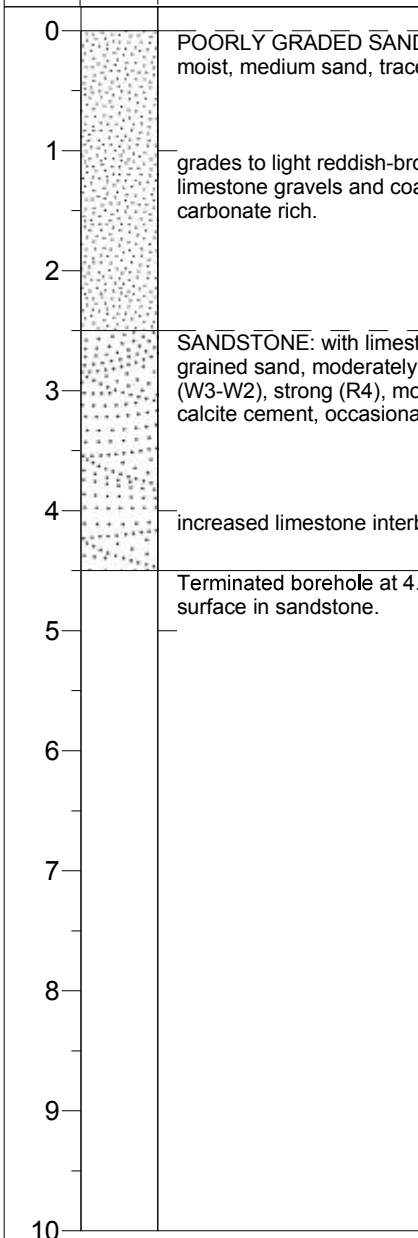

DEPTH (feet)	LITHOLOGICAL DESCRIPTION	Gamma (cpm)	SUBSURFACE SAMPLE INFORMATION			
			SAMPLES IDENTIFICATION	SAMPLE INTERVAL (ft bgl)	SAMPLE TYPE	LAB RESULTS RA-226 (pCi/g)
0	POORLY GRADED SAND (SP): reddish brown, loose, moist, medium sand, trace organics and gravels.	13332	S135-SCX-013-01	0-0.5	grab	2.7
1	grades to light reddish-brown, increased sub-rounded limestone gravels and coarse sands to 10-15%, carbonate rich.	12348				
2			S135-SCX-013-02	0.5-4	comp	0.73
3	SANDSTONE: with limestone beds, red to buff, medium grained sand, moderately to slightly weathered (W3-W2), strong (R4), moderate hard (H4), bedded, calcite cement, occasional non-cemented lenses.	12976				
		11628				
4	increased limestone interbeds, strong.		S135-SCX-013-03 S135-SCX-213-03	4-4.5	grab	0.62, 1.24
	Terminated borehole at 4.5 ft. below ground surface in sandstone.					
5						
6						
7						
8						
9						
10						

Gamma (cpm) scale: 0, 25000, 50000, 75000, 100000

Notes: cpm = counts per minute
pCi/g = picocuries per gram
grab = grab sample
comp = composite sample

Stantec

NAVAJO NATION
AUM Environmental Response Trust-First Phase

BOREHOLE ID: **S135-SCX-014**
CLIENT: NNAUMERT
PROJECT: Removal Site Evaluation
SITE LOCATION: Boyd Tisi no. 2

DRILLING CONTRACTOR: National Drilling
DRILLING METHOD: Rotary Sonic
DRILLING EQUIPMENT: Geoprobe 8140LC
SAMPLING METHOD: Sonic Core Barrel, 4 inch diameter

COORDINATE SYSTEM: NAD 1983 UTM Zone 12N
EASTING: 466633.86 NORTHING: 3968788.82
DATE STARTED: 11/12/2016 DATE FINISHED: 11/12/2016
TOTAL DEPTH (ft.): 4 BOREHOLE ANGLE: 90 degrees
LOGGED BY: Justin Peterson

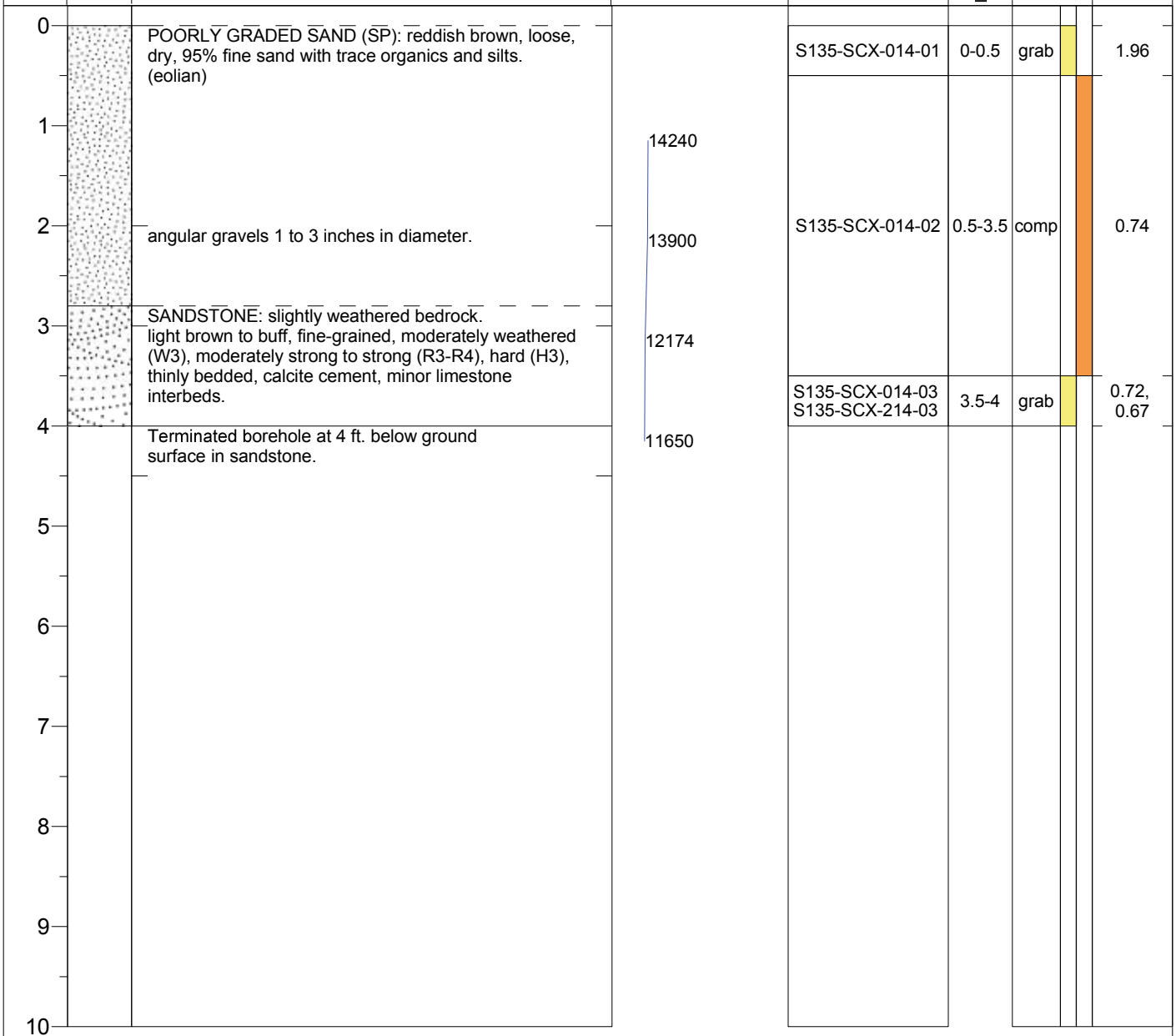

Notes: cpm = counts per minute
pCi/g = picocuries per gram
grab = grab sample
comp = composite sample

Stantec

NAVAJO NATION
AUM Environmental Response Trust-First Phase

BOREHOLE ID: **S135-SCX-015**
CLIENT: NNAUMERT
PROJECT: Removal Site Evaluation
SITE LOCATION: Boyd Tisi no. 2

DRILLING CONTRACTOR: National Drilling
DRILLING METHOD: Rotary Sonic
DRILLING EQUIPMENT: Geoprobe 8140LC
SAMPLING METHOD: Sonic Core Barrel, 4 inch diameter

COORDINATE SYSTEM: NAD 1983 UTM Zone 12N
EASTING: 466544.2 NORTHING: 3968809.17
DATE STARTED: 11/12/2016 DATE FINISHED: 11/12/2016
TOTAL DEPTH (ft.): 4.75 BOREHOLE ANGLE: 90 degrees
LOGGED BY: Justin Peterson

DEPTH (feet)	LITHOLOGICAL DESCRIPTION	Gamma (cpm)	SUBSURFACE SAMPLE INFORMATION: SAMPLES IDENTIFICATION	SAMPLE INTERVAL (ft bgl)	SAMPLE TYPE	LAB RESULTS RA-226 (pCi/g)
0	POORLY GRADED SAND (SP): reddish-brown, loose, dry, fine sand (95%), trace organics. (eolian)	13330	S135-SCX-015-01 S135-SCX-215-01	0-0.5	grab	0.73, 0.72
1	POORLY GRADED SAND WITH GRAVEL (SP): light reddish brown, predominantly fine to medium sand, few coarse-sands and gravels, thinly bedded, trace organics	14178				
2	Increasing gravels (fine to coarse limestone gravels)	12386	S135-SCX-015-02	0.5-4.5	comp	0.56
3	SANDSTONE: weathered bedrock. assorted colors, fine to medium grained sand matrix, moderate weathered (W3), moderate strong (R3), moderate hard (H4), thin bedded calcareous sandstone with minor limestone beds.	11376				
4	grades light buff to white, fresh (W1), strong (R4).					
5	Terminated borehole at 4.75 ft. below ground surface in sandstone.					
6						
7						
8						
9						
10						

Gamma (cpm) scale: 0, 25000, 50000, 75000, 100000

Notes: cpm = counts per minute
pCi/g = picocuries per gram
grab = grab sample
comp = composite sample

Stantec

NAVAJO NATION
AUM Environmental Response Trust-First Phase

BOREHOLE ID: **S135-SCX-016**
CLIENT: NNAUMERT
PROJECT: Removal Site Evaluation
SITE LOCATION: Boyd Tisi no. 2

DRILLING CONTRACTOR: National Drilling
DRILLING METHOD: Rotary Sonic
DRILLING EQUIPMENT: Geoprobe 8140LC
SAMPLING METHOD: Sonic Core Barrel, 4 inch diameter

COORDINATE SYSTEM: NAD 1983 UTM Zone 12N
EASTING: 466703.61 NORTHING: 3968871.14
DATE STARTED: 11/12/2016 DATE FINISHED: 11/12/2016
TOTAL DEPTH (ft.): 5 BOREHOLE ANGLE: 90 degrees
LOGGED BY: Justin Peterson

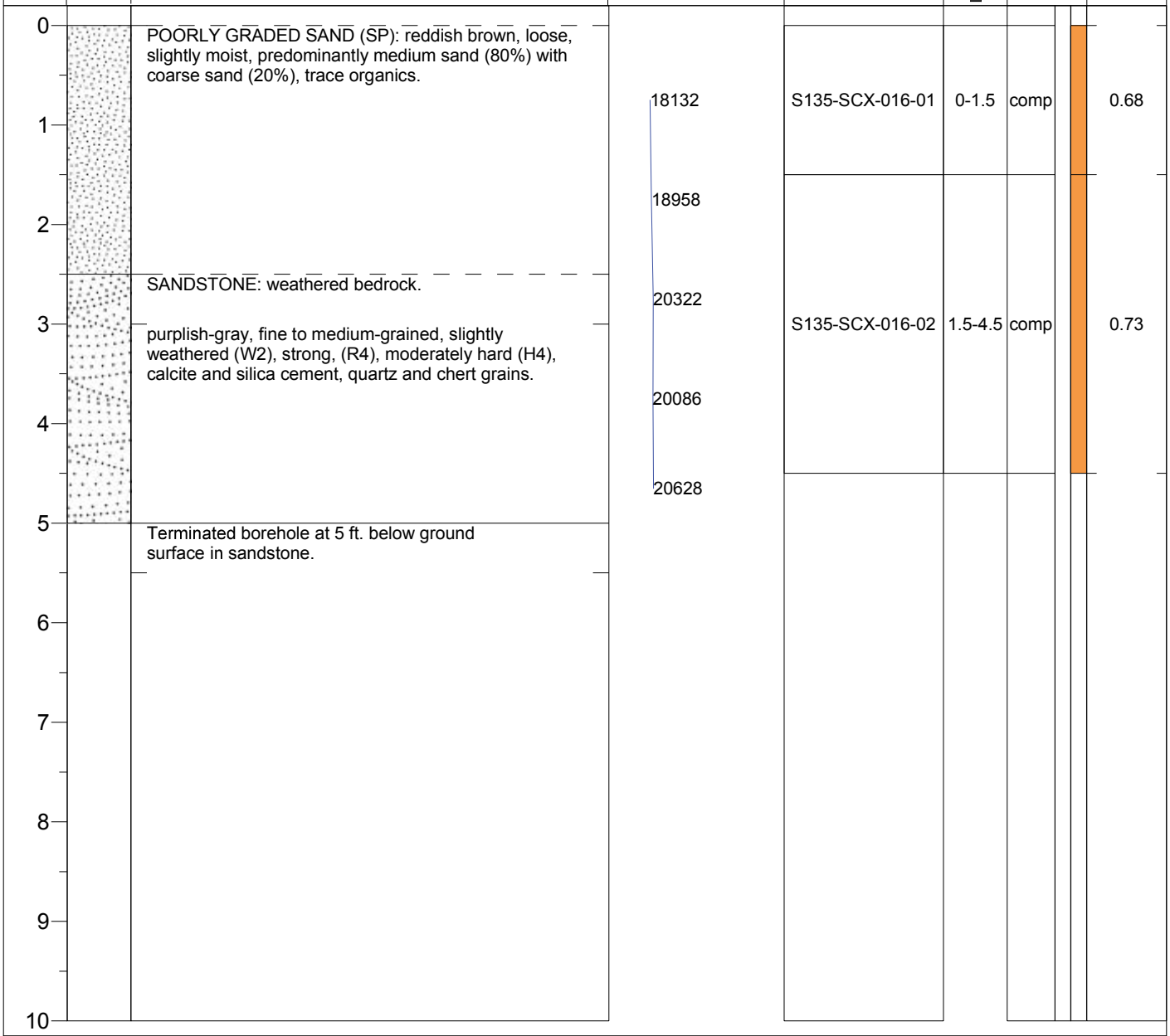

Notes: cpm = counts per minute
pCi/g = picocuries per gram
grab = grab sample
comp = composite sample

Stantec

NAVAJO NATION
AUM Environmental Response Trust-First Phase

BOREHOLE ID: **S135-SCX-017**
CLIENT: NNAUMERT
PROJECT: Removal Site Evaluation
SITE LOCATION: Boyd Tisi no. 2

DRILLING CONTRACTOR: National Drilling
DRILLING METHOD: Rotary Sonic
DRILLING EQUIPMENT: Geoprobe 8140LC
SAMPLING METHOD: Sonic Core Barrel, 4 inch diameter

COORDINATE SYSTEM: NAD 1983 UTM Zone 12N
EASTING: 466690.71 NORTHING: 3968848.86
DATE STARTED: 11/12/2016 DATE FINISHED: 11/12/2016
TOTAL DEPTH (ft.): 10 BOREHOLE ANGLE: 90 degrees
LOGGED BY: Justin Peterson

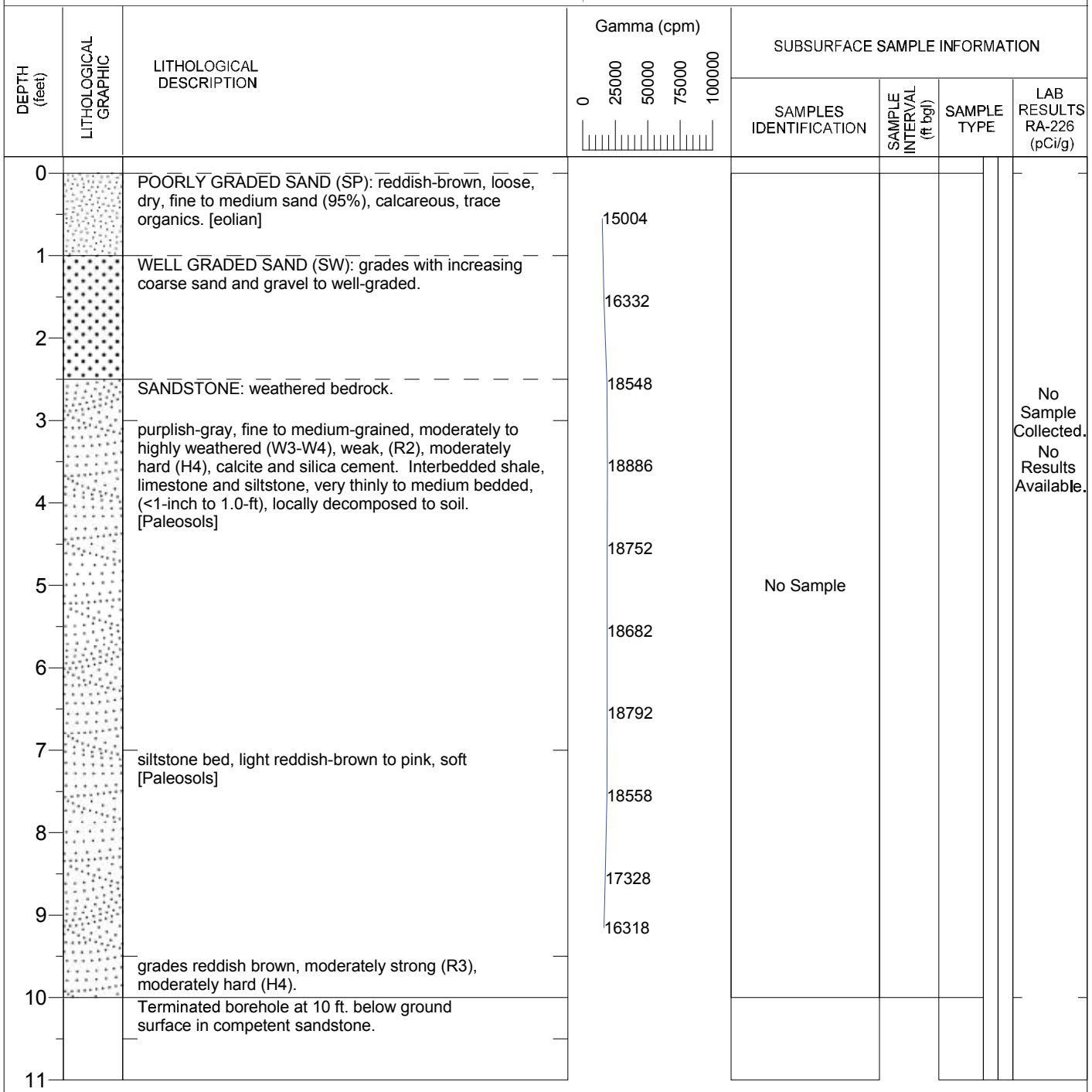

Notes: cpm = counts per minute
pCi/g = picocuries per gram
grab = grab sample
comp = composite sample

Stantec

NAVAJO NATION
AUM Environmental Response Trust-First Phase

BOREHOLE ID: **S135-SCX-018**
CLIENT: NNAUMERT
PROJECT: Removal Site Evaluation
SITE LOCATION: Boyd Tisi no. 2

DRILLING CONTRACTOR: Stantec
DRILLING METHOD: Hand auger
DRILLING EQUIPMENT: Hand auger
SAMPLING METHOD: Regular hand auger, 3 inch diameter

COORDINATE SYSTEM: NAD 1983 UTM Zone 12N
EASTING: 466697.6915 NORTHING: 3968908.447
DATE STARTED: 10/26/2016 DATE STARTED: 10/26/2016
TOTAL DEPTH (ft.): 2.0 BOREHOLE ANGLE: 90 degrees
LOGGED BY: Luis Rodriguez

DEPTH (feet)	LITHOLOGICAL GRAPHIC	LITHOLOGICAL DESCRIPTION	Gamma (cpm) 0 / 25000 / 50000 / 75000	SUBSURFACE SAMPLE INFORMATION: SAMPLE IDENTIFICATION	SAMPLE INTERVAL (ft bgl)	SAMPLE TYPE	LAB RESULTS RA-226 (pCi/g)
0		No lithological description recorded. Down hole gamma scan completed to 2.0 ft. below ground surface.	9747	No Sample			No sample collected. No results.
			13120				
1			14521				
			16089				
2			16526				
3							
4							
5							

Notes: cpm = counts per minute
pCi/g = picocuries per gram
grab = grab sample
comp = composite sample
- - - - = approximate contact

Stantec

NAVAJO NATION
AUM Environmental Response Trust-First Phase

BOREHOLE ID: **S135-SCX-019**
CLIENT: NNAUMERT
PROJECT: Removal Site Evaluation
SITE LOCATION: Boyd Tisi no. 2

DRILLING CONTRACTOR: Stantec
DRILLING METHOD: Hand auger
DRILLING EQUIPMENT: Hand auger
SAMPLING METHOD: Regular hand auger, 3 inch diameter

COORDINATE SYSTEM: NAD 1983 UTM Zone 12N
EASTING: 466677.2916 NORTHING: 3968825.007
DATE STARTED: 10/26/2016 DATE STARTED: 10/26/2016
TOTAL DEPTH (ft.): 0.5 BOREHOLE ANGLE: 90 degrees
LOGGED BY: Luis Rodriguez

DEPTH (feet)	LITHOLOGICAL GRAPHIC	LITHOLOGICAL DESCRIPTION	Gamma (cpm) 0 25000 50000 75000	SUBSURFACE SAMPLE INFORMATION: SAMPLE IDENTIFICATION	SAMPLE INTERVAL (ft bgl)	SAMPLE TYPE	LAB RESULTS RA-226 (pCi/g)
0		No lithological description recorded. Down hole gamma scan completed to 0.5 ft. below ground surface. Terminated hand auger borehole at 0.5 ft bgs. Refusal on bedrock. Gamma measurements are approximate.	13000 18000	No Sample			No sample collected. No results.
1							
2							
3							
4							
5							

Notes: cpm = counts per minute
pCi/g = picocuries per gram
grab = grab sample
comp = composite sample
- - - - = approximate contact

Stantec

NAVAJO NATION
AUM Environmental Response Trust-First Phase

BOREHOLE ID: **S135-SCX-020**
CLIENT: NNAUMERT
PROJECT: Removal Site Evaluation
SITE LOCATION: Boyd Tisi no. 2

DRILLING CONTRACTOR: Stantec
DRILLING METHOD: Hand auger
DRILLING EQUIPMENT: Hand auger
SAMPLING METHOD: Regular hand auger, 3 inch diameter

COORDINATE SYSTEM: NAD 1983 UTM Zone 12N
EASTING: 466629.9123 NORTHING: 3968815.623
DATE STARTED: 10/26/2016 DATE STARTED: 10/26/2016
TOTAL DEPTH (ft.): 0.6 BOREHOLE ANGLE: 90 degrees
LOGGED BY: Luis Rodriguez

DEPTH (feet)	LITHOLOGICAL GRAPHIC	LITHOLOGICAL DESCRIPTION	Gamma (cpm) 0 25000 50000 75000	SUBSURFACE SAMPLE INFORMATION: SAMPLE IDENTIFICATION	SAMPLE INTERVAL (ft bgl)	SAMPLE TYPE	LAB RESULTS RA-226 (pCi/g)
0		No lithological description recorded. Down hole gamma scan completed to 0.6 ft. below ground surface. Terminated hand auger borehole at 0.6 ft bgs. Refusal on bedrock.	11588	No Sample			No sample collected. No results.
			12291				
1							
2							
3							
4							
5							

Notes: cpm = counts per minute
pCi/g = picocuries per gram
grab = grab sample
comp = composite sample
- - - - = approximate contact

Appendix D Evaluation of RSE Data

D.1 Background Reference Area Selection

D.2 Statistical Evaluation

BACKGROUND REFERENCE AREA SELECTION

1.0 INTRODUCTION

This appendix presents the rationale for selection of the background reference area for the Boyd Tisi No. 2 site (Site). To select the background reference area for the Site, personnel considered geology, predominant wind direction, hydrologic influence, similarities of vegetation and ground cover, distance from the Site, and visual evidence of impacts due to mining (or other anthropogenic sources) in accordance with the *Multi-Agency Radiation Survey and Site Investigation Manual – Appendix A* ([MARSSIM] USEPA, 2000).

2.0 POTENTIAL BACKGROUND REFERENCE AREAS

The potential background reference area study was initiated during the Site Clearance desktop study and field investigations. In April 2016, three potential background reference areas (hereafter referred to as BG-1, BG-2, and BG-5[1]) were identified for the Site, and gamma surveys of the three areas were completed. These background reference areas were identified to represent the geologic conditions at the Site where mining-impacted material was assumed to be present, which consists of Quaternary deposits and limited exposures of bedrock of the Chinle Formation, as described below. Following data review during generation of the *Boyd Tisi No. 2 Western Site Clearance Data Report* (MWH, 2016a), it was determined that BG-5 was not a good candidate for the Site (see Section 3.0). Samples were collected at BG-1 and BG-2 in October 2016 to represent the Quaternary deposits. Following the Site Characterization program, at the Site it was determined that BG-1 and BG-2 also may not be representative of the Site (refer to Section 3.0). Consequently, two additional potential background reference areas were evaluated (hereafter referred to as BG-3 and BG-4) to represent the Chinle Formation. Gamma surveys and sample collection from BG-3 and BG-4 were completed in March 2017.

The locations of the five potential background reference areas (BG-1, BG-2, BG-3, BG-4, and BG-5) are shown along with the Site geology in Figure D.1-1. The potential background reference areas are described below.

- BG-1 encompasses an area of 1,176 feet squared [ft^2] (approximately 0.03 acres), is located 800 feet (ft) south of the Site, and is upwind/crosswind and hydrologically cross-gradient from the Site. Geologically, BG-1 represents areas on the margins of the Site characterized by alluvial flood plain or thin sheet-flow deposits (Quaternary). The vegetation and ground cover at BG-1 are similar to the Site.

[1] The background reference area designations used in this RSE Report have been revised from the *Boyd Tisi No. 2 Western Site Clearance Data Report* (MWH, 2016a).

- BG-2 encompasses an area of 1,598 ft^2 (approximately 0.04 acres), is located 1,500 ft northeast of the Site, and is downwind and hydrologically up-gradient from the Site. Geologically, BG-2 represents areas on the Site that have either eolian deposits with sand dune features and/or alluvial deposits along the stream bank (Quaternary). The vegetation and ground cover at BG-2 are similar to the Site.

- BG-3 encompasses an area of 521 ft^2 (approximately 0.01 acres), is located 490 ft north of the Site, and is crosswind and hydrologically cross-gradient from the Site. Geologically, BG-3 represents topographically elevated areas near the center of the Site characterized by highly weathered bedrock outcrops of the Chinle Formation and thin residual soil deposits. The vegetation and ground cover at BG-3 are similar to the central portions of the Site.

- BG-4 encompasses an area of 529 ft^2 (approximately 0.01 acres), is located 1,080 ft south of the Site, and is upwind/crosswind and hydrologically cross-gradient from the Site. Geologically, BG-4 represents topographically elevated areas near the center of the Site characterized by highly weathered bedrock outcrops of the Chinle Formation and thin residual soil deposits. BG-4 has little to no ground or vegetation cover and represents barren portions of the Site where bedrock or thin residual soils are exposed at the surface.

- BG-5 encompasses an area of 1,026 ft^2 (approximately 0.02 acres), is located 600 ft northeast of the Site, and is downwind and hydrologically up-gradient from the Site. Geologically, BG-5 represents areas on the Site that have either eolian deposits with sand dune features and/or alluvial deposits along a stream bank (Quaternary). The vegetation and ground cover at BG-5 are similar to the Site.

The potential background reference area evaluation included a walkover gamma survey, static surface and subsurface gamma measurements (at subsurface borehole locations), and surface and subsurface soil sampling at BG-1, BG-2, BG-3, and BG-4; no samples were collected from BG-5. Field personnel collected the following surface and subsurface samples, as shown in Figure D.1-2 and summarized in Table D.1-1.

- BG-1: Eleven surface soil grab samples from 11 locations, and one subsurface soil grab sample from hand auger location S135-SCX-001.

- BG-2: Eleven surface sediment grab samples from 11 locations, and one subsurface sediment grab sample from hand auger location S135-SCX-002.

- BG-3: Eleven surface soil grab samples from 11 locations, and one subsurface soil grab sample from hand auger location S135-BG3-011.

- BG-4: Eleven surface soil grab samples from 11 locations, and one subsurface soil grab sample from hand auger location S135-BG4-011.

Samples were categorized as surface samples where sample depths ranged from 0.0-0.5 ft below ground surface (bgs) and as subsurface samples where sample depths were greater than 0.5 ft bgs. Table D.1-2 provides the results of the sample analyses. It is important to note that sample analyses for BG-1, BG-2, and BG-4 are included in this appendix and not in the tables in the RSE Report. Tables D.1-3 and D.1-4 provide descriptive statistics for the metals/Ra-226

concentrations and the surface gamma measurements, respectively. Field forms, including borehole logs, are provided in Appendix C of the RSE Report.

Figure D.1-2 shows gamma survey measurements at the five potential background areas. The same equipment used for the gamma survey was used for the static one-minute gamma measurements at ground surface and down-hole hand auger locations: S135-SCX-001 (BG-1), S135-SCX-002 (BG-2), S135-BG3-011 (BG-3), and S135-BG4-011 (BG-4). Gamma measurements were collected according to the methods described in the *Removal Site Evaluation Work Plan* (MWH, 2016b).

3.0 SELECTION OF BACKGROUND REFERENCE AREA

Subsequent to performing the gamma surveys at BG-5, it was determined that the area was downwind of the Site, and therefore, not a good candidate location to represent background conditions for the Site. During Site Characterization, field personnel determined that bedrock (Chinle Formation) was more prevalent at the Site and closer to the surface (generally 1 to 4 ft bgs) than was presumed during selection of the potential background reference areas in April 2016. Although BG-1 and BG-2 have certain surficial characteristics that are similar to the Site, bedrock was not observed at the surface or in the hand auger borings at either BG-1 or BG-2. It also was established during Site Characterization that BG-2 is downwind from the Site.

BG-3 and BG-4 both contain bedrock outcrops, represent the Site geologically, and are located crosswind and upwind from the Site, respectively. BG-3 was selected as the background reference area for the Site because the ground cover and vegetation cover better represent Site conditions than the barren ground conditions observed at BG-4. BG-3 gamma survey measurements and soil sample results were used for the remainder of the RSE for the Site.

Although BG-3 was selected for the statistical evaluation and derivation of investigation levels (ILs) for the Site, it is worth noting that both BG-3 and BG-4 are geologically similar: both background reference areas represent topographically elevated areas near the center of the Site characterized by highly weathered bedrock outcrops and thin unconsolidated deposits consisting of Holocene to Pleistocene sand mixed with residual soil. However, the maximum, mean and 95-95 upper tolerance limit (UTL) for gamma measurements collected from BG-4 are almost 2,000 counts per minute (cpm) higher than those for BG-3 (refer to Appendix D.2). Consequently, background sampling results for BG-4 should be taken into consideration during future Removal Action evaluations for the Site.

4.0 REFERENCES

MWH, 2016a. Boyd Tisi No. 2 Western Site Clearance Data Report – Revision 1, Navajo Nation Abandoned Uranium Mines Environmental Response Trust. December.

MWH, 2016b. Navajo Nation AUM Environmental Response Trust – First Phase Removal Site Evaluation Work Plan. October.

USEPA, 2000. Multi-Agency Radiation Survey and Site Investigation Manual (MARSSIM), EPA 402-R-97-016, Rev. 1.

Table D.1-1
Potential Background Reference Area Soil Sampling Summary
Boyd Tisi No. 2
Removal Site Evaluation Report - Final
Navajo Nation AUM Environmental Response Trust - First Phase

Sample Location	Sample Depth (ft bgs)	Sample Category	Sample Collection Method	Sample Date	Easting [1]	Northing [1]	Sample Types Metals, Total	Sample Types Ra-226
Potential Background Reference Area - Background Area 1								
S135-BG1-001	0 - 0.5	SF	G	10/24/2016	466688.549	3968472.94	N;FD	N;FD
S135-BG1-002	0 - 0.5	SF	G	10/24/2016	466690.586	3968471.63	N	N
S135-BG1-003	0 - 0.5	SF	G	10/24/2016	466693.01	3968473.65	N	N
S135-BG1-004	0 - 0.5	SF	G	10/24/2016	466688.514	3968475.75	N	N
S135-BG1-005	0 - 0.5	SF	G	10/24/2016	466690.422	3968477.03	N	N
S135-BG1-006	0 - 0.5	SF	G	10/24/2016	466693.103	3968476.03	N	N
S135-BG1-007	0 - 0.5	SF	G	10/24/2016	466694.964	3968477.16	N	N
S135-BG1-008	0 - 0.5	SF	G	10/24/2016	466688.237	3968480.56	N	N
S135-BG1-009	0 - 0.5	SF	G	10/24/2016	466690.448	3968479.54	N;MS;MSD	N
S135-BG1-010	0 - 0.5	SF	G	10/24/2016	466692.823	3968480.15	N	N
S135-SCX-001	0 - 0.5	SF	G	10/26/2016	466692.828	3968478.23	N;MS;MSD	N
S135-SCX-001	0 - 1	SB	C	10/26/2016	466692.828	3968478.23	N	N
Potential Background Reference Area - Background Area 2								
S135-BG2-001	0 - 0.5	SF	G	10/24/2016	467204.901	3969065.99	N;FD	N;FD
S135-BG2-002	0 - 0.5	SF	G	10/24/2016	467206.724	3969063.28	N	N
S135-BG2-003	0 - 0.5	SF	G	10/24/2016	467210.321	3969062.54	N	N
S135-BG2-004	0 - 0.5	SF	G	10/24/2016	467207.47	3969068.43	N	N
S135-BG2-005	0 - 0.5	SF	G	10/24/2016	467210.391	3969067.54	N	N
S135-BG2-006	0 - 0.5	SF	G	10/24/2016	467211.632	3969064.85	N	N
S135-BG2-007	0 - 0.5	SF	G	10/24/2016	467212.987	3969070.78	N	N
S135-BG2-008	0 - 0.5	SF	G	10/24/2016	467215.975	3969070.66	N	N
S135-BG2-009	0 - 0.5	SF	G	10/24/2016	467217.664	3969067.35	N	N
S135-BG2-010	0 - 0.5	SF	G	10/24/2016	467215.435	3969065.67	N	N
S135-SCX-002	0 - 0.5	SF	G	10/26/2016	467209.177	3969063.44	N	N
S135-SCX-002	0.5 - 2	SB	C	10/26/2016	467209.177	3969063.44	N	N
Potential Background Reference Area - Background Area 3								
S135-BG3-001	0 - 0.5	SF	G	3/17/2017	466717.662	3969087.22	N	N
S135-BG3-002	0 - 0.5	SF	G	3/17/2017	466717.154	3969089.04	N;MS;MSD	N
S135-BG3-003	0 - 0.5	SF	G	3/17/2017	466718.516	3969091.02	N	N
S135-BG3-004	0 - 0.5	SF	G	3/17/2017	466720.475	3969089.51	N;FD	N;FD
S135-BG3-005	0 - 0.5	SF	G	3/17/2017	466720.537	3969087.31	N	N
S135-BG3-006	0 - 0.5	SF	G	3/17/2017	466722.933	3969087.17	N;MS;MSD	N
S135-BG3-007	0 - 0.5	SF	G	3/17/2017	466723.767	3969085.83	N;FD	N;FD
S135-BG3-008	0 - 0.5	SF	G	3/17/2017	466722.114	3969084.38	N	N
S135-BG3-009	0 - 0.5	SF	G	3/17/2017	466720.024	3969085.19	N	N
S135-BG3-010	0 - 0.5	SF	G	3/17/2017	466719.796	3969086.14	N	N
S135-BG3-011	0 - 0.5	SF	G	3/17/2017	466719.595	3969087.29	N	N
S135-BG3-011	0.5 - 0.9	SB	G	3/17/2017	466719.595	3969087.29	N	N
Potential Background Reference Area - Background Area 4								
S135-BG4-001	0 - 0.5	SF	G	3/17/2017	466726.299	3968374.29	N	N
S135-BG4-002	0 - 0.5	SF	G	3/17/2017	466724.603	3968375.42	N;FD	N;FD
S135-BG4-003	0 - 0.5	SF	G	3/17/2017	466724.16	3968377.21	N	N
S135-BG4-004	0 - 0.5	SF	G	3/17/2017	466725.719	3968378.47	N	N
S135-BG4-005	0 - 0.5	SF	G	3/17/2017	466726.723	3968377.52	N	N
S135-BG4-006	0 - 0.5	SF	G	3/17/2017	466724.801	3968380.14	N	N
S135-BG4-007	0 - 0.5	SF	G	3/17/2017	466726.52	3968380.04	N	N
S135-BG4-008	0 - 0.5	SF	G	3/17/2017	466728.274	3968380.2	N	N
S135-BG4-009	0 - 0.5	SF	G	3/17/2017	466730.334	3968376.57	N	N
S135-BG4-010	0 - 0.5	SF	G	3/17/2017	466727.307	3968376.52	N	N
S135-BG4-011	0 - 0.5	SF	G	3/17/2017	466727.032	3968374.53	N	N
S135-BG4-011	0.5 - 0.7	SB	G	3/17/2017	466727.032	3968374.53	N	N

Notes

N	Normal
FD	Field Duplicate
MS	Matrix Spike
MSD	Matrix Spike Duplicate
Ra-226	Radium 226
C	Composite Sample
G	Grab Sample
SB	Subsurface Sample
SF	Surface Sample
ft bgs	feet below ground surface

[1] Coordinate System: NAD 1983 UTM Zone 12N

Table D.1-2
Potential Background Reference Area Soil Sample Analytical Results
Boyd Tisi No. 2
Removal Site Evaluation Report - Final
Navajo Nation AUM Environmental Response Trust - First Phase

Location Identification Date Collected Depth (feet) Analyte (Units)	S135-BG1-001 Dup 10/24/2016 0 - 0.5	S135-BG1-001 10/24/2016 0 - 0.5	S135-BG1-002 10/24/2016 0 - 0.5	S135-BG1-003 10/24/2016 0 - 0.5	S135-BG1-004 10/24/2016 0 - 0.5	S135-BG1-005 10/24/2016 0 - 0.5	S135-BG1-006 10/24/2016 0 - 0.5	S135-BG1-007 10/24/2016 0 - 0.5	S135-BG1-008 10/24/2016 0 - 0.5	S135-BG1-009 10/24/2016 0 - 0.5	S135-BG1-010 10/24/2016 0 - 0.5	S135-SCX-001 10/26/2016 0 - 0.5
Metals[1] (mg/kg)												
Arsenic	2.4	0.89	0.76	0.81	1.2	0.98	1	1.3	1.6	1.2	1	1.3 J
Molybdenum	<0.18	<0.2	<0.2	<0.19	<0.2	<0.19	<0.19	<0.19	<0.18	<0.2	<0.2	<0.2
Selenium	<0.91	<1	<1	<0.93	<0.98	<0.95	<0.97	<0.95	<0.88	<1	<1	<1
Uranium	0.65	0.68	0.51	0.44	0.51	0.49	0.61	0.64	0.72	0.52	0.53	0.6 J+
Vanadium	11	7.7	8.5	9.4	8.6	7.6	8.6	7.9	9.3	9.8 J	8.7	12
Radionuclides (pCi/g)												
Radium-226	0.6 ± 0.21 J-	0.62 ± 0.2 J-	0.63 ± 0.2 J-	0.56 ± 0.17 J-	0.5 ± 0.2 J-	0.52 ± 0.18 J-	0.58 ± 0.22 J-	0.62 ± 0.18 J-	0.71 ± 0.22 J-	0.7 ± 0.2 J-	0.51 ± 0.16 J-	0.67 ± 0.21

Notes
Bold Bolded result indicates positively identified compound
mg/kg milligrams per kilogram
pCi/g picocuries per gram
[1] Analysis required a standard sample dilution of 10 times; reported values have been converted to non-dilute value
J Data are estimated due to associated quality control data
J- Data are estimated and are potentially biased low due to associated quality control data
J+ Data are estimated and are potentially biased high due to associated quality control data
< Result not detected above associated laboratory reporting limit

Table D.1-2
Potential Background Reference Area Soil Sample Analytical Results
Boyd Tisi No. 2
Removal Site Evaluation Report - Final
Navajo Nation AUM Environmental Response Trust - First Phase

Location Identification	S135-SCX-001	S135-BG2-001	S135-BG2-001 Dup	S135-BG2-002	S135-BG2-003	S135-BG2-004	S135-BG2-005	S135-BG2-006	S135-BG2-007	S135-BG2-008	S135-BG2-009	S135-BG2-010
Date Collected	10/26/2016	10/24/2016	10/24/2016	10/24/2016	10/24/2016	10/24/2016	10/24/2016	10/24/2016	10/24/2016	10/24/2016	10/24/2016	10/24/2016
Depth (feet)	0 - 1	0 - 0.5	0 - 0.5	0 - 0.5	0 - 0.5	0 - 0.5	0 - 0.5	0 - 0.5	0 - 0.5	0 - 0.5	0 - 0.5	0 - 0.5
Analyte (Units)												
Metals[1] (mg/kg)												
Arsenic	1.5	0.85	0.76	0.85	0.87	0.92	0.86	0.83	0.99	0.83	0.92	1.4
Molybdenum	<0.2	<0.18	<0.19	<0.2	<0.2	<0.2	<0.19	<0.19	<0.2	<0.2	0.22	<0.2
Selenium	<0.98	<0.92	<0.96	<1	<1	<1	<0.96	<0.96	<1	<0.98	<0.9	<0.99
Uranium	0.72	0.46	0.62	0.51	0.54	0.45	0.47	0.46	0.45	0.4	0.66	0.52
Vanadium	11	7.1	6.9	7.7	8.3	7.4	8.7	7.1	7.4	7.3	9.4	16
Radionuclides (pCi/g)												
Radium-226	0.61 ± 0.25 J-	0.58 ± 0.24	0.57 ± 0.18	0.74 ± 0.2	0.6 ± 0.2	0.79 ± 0.23	0 ± 0.19	0.59 ± 0.24	0.54 ± 0.18	0.72 ± 0.22	0 ± 0.2	0.62 ± 0.22

Notes
Bold Bolded result indicates positively identified compound
mg/kg milligrams per kilogram
pCi/g picocuries per gram
[1] Analysis required a standard sample dilution of 10 times; reported values have been converted to non-dilute value
J Data are estimated due to associated quality control data
J- Data are estimated and are potentially biased low due to associated quality control data
J+ Data are estimated and are potentially biased high due to associated quality control data
< Result not detected above associated laboratory reporting limit

Table D.1-2
Potential Background Reference Area Soil Sample Analytical Results
Boyd Tisi No. 2
Removal Site Evaluation Report - Final
Navajo Nation AUM Environmental Response Trust - First Phase

Location Identification	S135-SCX-002	S135-SCX-002	S135-BG3-001	S135-BG3-002	S135-BG3-003	S135-BG3-004	S135-BG3-004 Dup	S135-BG3-005	S135-BG3-006	S135-BG3-007	S135-BG3-007 Dup	S135-BG3-008
Date Collected	10/26/2016	10/26/2016	3/17/2017	3/17/2017	3/17/2017	3/17/2017	3/17/2017	3/17/2017	3/17/2017	3/17/2017	3/17/2017	3/17/2017
Depth (feet)	0 - 0.5	0.5 - 2	0 - 0.5	0 - 0.5	0 - 0.5	0 - 0.5	0 - 0.5	0 - 0.5	0 - 0.5	0 - 0.5	0 - 0.5	0 - 0.5
Analyte (Units)												
Metals[1] (mg/kg)												
Arsenic	0.97	1	1.3	0.88	2.5	0.6	0.59	0.57	0.67	0.69	0.66	0.62
Molybdenum	<0.2	<0.18	<0.2	<0.2	<0.2	0.25	0.26	0.31	0.28	0.38	0.33	0.24
Selenium	<1	<0.92	<0.99	<1	<1	<0.94	<0.96	<1	<1	<0.99	<0.96	<0.96
Uranium	0.52	0.6	3.3	4.8	2.9	7.7	7.6	3	1.3	1.1	1.1	3.2
Vanadium	10	12	43	35	48	36	35	39	31	39	36	30
Radionuclides (pCi/g)												
Radium-226	0.73 ± 0.19	0.63 ± 0.19 J-	3.15 ± 0.48	1.79 ± 0.34	5.45 ± 0.73	1.11 ± 0.28	0.93 ± 0.27	1.1 ± 0.27	1.14 ± 0.29	1.09 ± 0.27	1.43 ± 0.3	1.42 ± 0.31

Notes
Bold Bolded result indicates positively identified compound
mg/kg milligrams per kilogram
pCi/g picocuries per gram
[1] Analysis required a standard sample dilution of 10 times; reported values have been converted to non-dilute value
J Data are estimated due to associated quality control data
J- Data are estimated and are potentially biased low due to associated quality control data
J+ Data are estimated and are potentially biased high due to associated quality control data
< Result not detected above associated laboratory reporting limit

Table D.1-2
Potential Background Reference Area Soil Sample Analytical Results
Boyd Tisi No. 2
Removal Site Evaluation Report - Final
Navajo Nation AUM Environmental Response Trust - First Phase

Location Identification	S135-BG3-009	S135-BG3-010	S135-BG3-011	S135-BG3-011	S135-BG4-001	S135-BG4-002	S135-BG4-002 Dup	S135-BG4-003	S135-BG4-004	S135-BG4-005	S135-BG4-006	S135-BG4-007
Date Collected	3/17/2017	3/17/2017	3/17/2017	3/17/2017	3/17/2017	3/17/2017	3/17/2017	3/17/2017	3/17/2017	3/17/2017	3/17/2017	3/17/2017
Depth (feet)	0 - 0.5	0 - 0.5	0 - 0.5	0.5 - 0.9	0 - 0.5	0 - 0.5	0 - 0.5	0 - 0.5	0 - 0.5	0 - 0.5	0 - 0.5	0 - 0.5
Analyte (Units)												
Metals[1] (mg/kg)												
Arsenic	0.7	0.55	0.67	0.37	0.78	0.78	0.79	0.94	0.72	0.97	0.8	0.8
Molybdenum	0.22	0.55	0.36	0.39	0.28	0.19	0.19	0.22	0.22	0.31	0.23	<0.2
Selenium	<0.98	<1	<1	<0.97	<0.83	<0.94	<0.8	<0.93	<0.99	<0.92	<1	1.1
Uranium	5	29	8.2	2.1	1.6	2.4	2.4	2	3	2.5	2.2	1.5
Vanadium	36	35	35	36	19	18	18	20	19	19	18	19
Radionuclides (pCi/g)												
Radium-226	1.24 ± 0.29	5.01 ± 0.7	1.3 ± 0.3	1.08 ± 0.29	1.6 ± 0.35	1.79 ± 0.33	1.88 ± 0.38	1.83 ± 0.43	1.44 ± 0.31	1.69 ± 0.39	1.41 ± 0.36	1.46 ± 0.33

Notes
Bold Bolded result indicates positively identified compound
mg/kg milligrams per kilogram
pCi/g picocuries per gram
[1] Analysis required a standard sample dilution of 10 times; reported values have been converted to non-dilute value
J Data are estimated due to associated quality control data
J- Data are estimated and are potentially biased low due to associated quality control data
J+ Data are estimated and are potentially biased high due to associated quality control data
< Result not detected above associated laboratory reporting limit

Table D.1-2
Potential Background Reference Area Soil Sample Analytical Results
Boyd Tisi No. 2
Removal Site Evaluation Report - Final
Navajo Nation AUM Environmental Response Trust - First Phase

Location Identification	S135-BG4-008	S135-BG4-009	S135-BG4-010	S135-BG4-011	S135-BG4-011
Date Collected	3/17/2017	3/17/2017	3/17/2017	3/17/2017	3/17/2017
Depth (feet)	0 - 0.5	0 - 0.5	0 - 0.5	0 - 0.5	0.5 - 0.7
Analyte (Units)					
Metals[1] (mg/kg)					
Arsenic	1.1	1	1.5	1	0.77
Molybdenum	0.41	0.39	0.51	0.38	0.27
Selenium	<0.79	<0.91	<0.84	1	<1
Uranium	3.4	1.5	3.3	1.7	1.6
Vanadium	33	28	32	23	15
Radionuclides (pCi/g)					
Radium-226	1.96 ± 0.37	1.65 ± 0.36	2.39 ± 0.44	1.85 ± 0.34	1.44 ± 0.36

Notes
Bold Bolded result indicates positively identified compound
mg/kg milligrams per kilogram
pCi/g picocuries per gram
[1] Analysis required a standard sample dilution of 10 times; reported values have been converted to non-dilute value
J Data are estimated due to associated quality control data
J- Data are estimated and are potentially biased low due to associated quality control data
J+ Data are estimated and are potentially biased high due to associated quality control data
< Result not detected above associated laboratory reporting limit

Table D.1-3
Soil and Sediment Sampling Summary
Boyd Tisi No. 2
Removal Site Evaluation Report - Final
Navajo Nation AUM Environmental Response Trust - First Phase

Statistic	Arsenic (mg/kg)	Molybdenum (mg/kg)	Selenium (mg/kg)	Uranium (mg/kg)	Vanadium (mg/kg)	Radium-226 (pCi/g)
Background Reference Area Study - Background Area 1 - Quaternary Deposits						
Total Number of Observations	11	11	11	11	11	11
Percent Non-Detects	--	1	1	--	--	--
Minimum[1]	0.76	--	--	0.44	7.6	0.5
Minimum Detect[2]	--	N/A	N/A	--	--	--
Mean[1]	1.095	--	--	0.568	8.918	0.602
Mean Detects[2]	--	N/A	N/A	--	--	--
Median[1]	1	--	--	0.53	8.6	0.62
Maximum[1]	1.6	--	--	0.72	12	0.71
Maximum Detect[2]	--	N/A	N/A	--	--	--
Distribution	Normal	Not Calculated	Not Calculated	Normal	Normal	Normal
Coefficient of Variation[1]	0.229	--	--	0.154	0.139	0.123
UCL Type	95% Student's-t UCL	Not Calculated	Not Calculated	95% Student's-t UCL	95% Student's-t UCL	95% Student's-t UCL
UCL Result	1.231	Not Calculated	Not Calculated	0.616	9.595	0.642
UTL Type	UTL Normal	--	--	UTL Normal	UTL Normal	UTL Normal
UTL Result	1.8	--	--	0.814	12.4	0.811
Background Reference Area Study - Background Area 2 - Quaternary Deposits						
Total Number of Observations	11	11	11	11	11	11
Percent Non-Detects	--	0.9091	1	--	--	0.1818
Minimum[1]	0.83	--	--	0.4	7.1	--
Minimum Detect[2]	--	0.22	N/A	--	--	0.54
Mean[1]	0.935	--	--	0.495	8.764	--
Mean Detects[2]	--	0.22	N/A	--	--	0.657
Median[1]	0.87	--	--	0.47	7.7	--
Maximum[1]	1.4	--	--	0.66	16	--
Maximum Detect[2]	--	0.22	N/A	--	--	0.79
Distribution	Gamma	Not Calculated	Not Calculated	Normal	Gamma	Normal
Coefficient of Variation	0.175	--	--	0.138	0.295	--
UCL Type	95% Adjusted Gamma UCL	Not Calculated	Not Calculated	95% Student's-t UCL	95% Adjusted Gamma UCL	95% KM (t) UCL
UCL Result	1.038	Not Calculated	Not Calculated	0.532	10.4	0.683
UTL Type	UTL Gamma WH	--	--	UTL Normal	UTL Gamma WH	UTL KM Normal
UTL Result	1.405	Not Calculated	--	0.687	16.4	0.928

Table D.1-3
Soil and Sediment Sampling Summary
Boyd Tisi No. 2
Removal Site Evaluation Report - Final
Navajo Nation AUM Environmental Response Trust - First Phase

Statistic	Arsenic (mg/kg)	Molybdenum (mg/kg)	Selenium (mg/kg)	Uranium (mg/kg)	Vanadium (mg/kg)	Radium-226 (pCi/g)
Background Reference Area Study - Background Area 3 - Chinle Formation						
Total Number of Observations	11	11	11	11	11	11
Percent Non-Detects	--	64%	100%	--	--	--
Minimum[1]	1	--	--	0.600	9.20	0.710
Minimum Detect[2]	--	0.200	--	--	--	--
Mean[1]	1.57	--	--	1.05	11.3	0.985
Mean Detects[2]	--	0.260	--	--	--	--
Median[1]	1.20	--	--	1.00	10.0	0.990
Maximum[1]	--	0.235	--	--	--	--
Maximum Detect[2]	5.20	--	--	1.60	15.0	1.23
Distribution	--	0.370	--	--	--	--
Coefficient of Variation	Normal	Normal	Not Calculated	Normal	Normal	Normal
UCL Type	0.772	--	--	0.293	0.191	0.181
UCL Result	--	0.300	--	--	--	--
UTL Type	95% Student's-t UCL	95% KM (t) UCL	Not Calculated	95% Student's-t UCL	95% Student's-t UCL	95% Student's-t UCL
UTL Result	2.24	0.245	Not Calculated	1.21	12.5	1.08
Background Reference Area Study - Background Area 4 - Chinle Formation						
Total Number of Observations	11	11	11	11	11	11
Percent Non-Detects	--	0.09091	0.8182	--	--	--
Minimum[1]	0.72	--	--	1.5	18	1.41
Minimum Detect[2]	--	0.19	1	--	--	--
Mean[1]	0.945	--	--	2.282	22.55	1.734
Mean Detects[2]	--	0.314	1.05	--	--	--
Median[1]	0.94	--	--	2.2	19	1.69
Maximum[1]	1.5	--	--	3.4	33	2.39
Maximum Detect[2]	--	0.51	1.1	--	--	--
Distribution	Normal	Normal	Normal	Normal	Normal	Normal
Coefficient of Variation[1]	0.233	--	--	0.309	0.254	0.163
UCL Type	95% Student's-t UCL	95% KM (t) UCL	95% KM (t) UCL	95% Student's-t UCL	95% Student's-t UCL	95% Student's-t UCL
UCL Result	1.065	0.361	0.917	2.667	25.67	1.888
UTL Type	UTL Normal	UTL KM Normal	UTL KM Normal	UTL Normal	UTL Normal	UTL Normal
UTL Result	1.565	0.588	1.126	4.268	38.64	2.53

Notes
[1] This statistic is reported by ProUCL when the dataset contains 100 percent detections.
[2] This statistic is reported by ProUCL when non-detect values exist in the dataset. The value reported is calculated using detections only.

CV	Coefficient of variation
KM	Kaplan Meier
mg/kg	Milligrams per kilogram
--	Not applicable
pCi/g	Picocuries per gram
WH	Wilson Hilferty

Table D.1-4
Surface Gamma Survey Summary
Boyd Tisi No. 2
Removal Site Evaluation Report - Final
Navajo Nation AUM Environmental Response Trust - First Phase

Statistic \ Geologic Formation	Background Reference Area 1 (BG-1) Quaternary Deposits	Background Reference Area 2 (BG-2) Quaternary Deposits	Background Reference Area 3 (BG-3) Chinle Formation	Background Reference Area 4 (BG-4) Chinle Formation	Background Reference Area 5 (BG-5) Quaternary Deposits
Total Number of Observations	211	272	116	175	109
Minimum	7513	7670	10829	13076	7071
Mean	9292	9417	12727	14710	9357
Median	9130	9267	12758	14653	9086
Maximum	12838	13407	15070	16886	12419
Distribution	Normal	Normal	Normal	Normal	Normal
Coefficient of Variation	0.0971	0.103	0.068	0.0508	0.113
UCL Type	95% Student's-t UCL	95% Student's-t UCL	95% Student's-t UCL	95% Student's-t UCL	95% Student's-t UCL
UCL Result	9394	9514	12861	14803	9524
UTL Type	UTL Normal	UTL Normal	UTL Normal	UTL Normal	UTL Normal
UTL Result	10942	11166	14373	16091	11371

Notes
cpm Counts per minute
UCL Upper confidence limit
UTL Upper tolerance limit

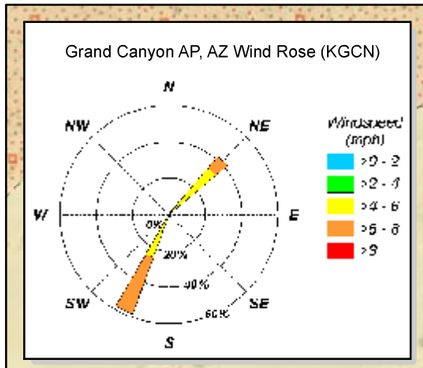

NOTE:
1. Bedrock units shown are at surface. Outside of mapped units, bedrock within the claim boundary is generally at 1 to 4 feet below ground surface and overlain by minor residual soils, alluvium, and eolian deposits.

REFERENCES:
Coordinate System: NAD 1983 UTM Zone 12N

Basemap image accessed from BING Maps imagery web mapping service (http://www.bing.com/maps) on 9/2018.

NAVAJO NATION
AUM Environmental Response Trust-First Phase

LEGEND

- Potential Background Reference Area
- Claim Boundary
- Other Claim Boundary
- Geologic Contact (Inferred)

Site Geology

QUATERNARY

- Earthworks: Human-caused disturbance of the land surface.
- Qar: ALLUVIUM (HOLOCENE) – Sand, silt, and clay with minor inter-bedded gravel.
- Qc/Qal: Surficial deposits of alluvium and colluvium.
- Qe: EOLIAN DEPOSITS (HOLOCENE to PLEISTOCENE) - Sand mixed with residual soil, well sorted, forms extensive sand sheet from 0 to greater than 40 feet thick.

TRIASSIC

- TRcp[1]: Petrified Forest Member – CHINLE FORMATION (UPPER TRIASSIC) – Claystone, siltstone, and minor sandstone, variegated.

N
W E
S

0 300 600
Feet

TITLE:
Geologic Map and Potential Background Reference Areas

PROJECT:
Removal Site Evaluation
Boyd Tisi No. 2 Mine Site

DATE: 9/28/2018

DOCUMENT NAME: Removal Site Evaluation Report

AUTHOR: CBB

REVIEWER: EDZ

FIGURE: D.1-1

Stantec

Document Path: U:\233001213\03_data\gis_cad_MXDs\RSE\RSE_BoydTisi\RSE_BoydTisi_AppendixD1_1_11x17_L_20180928.mxd

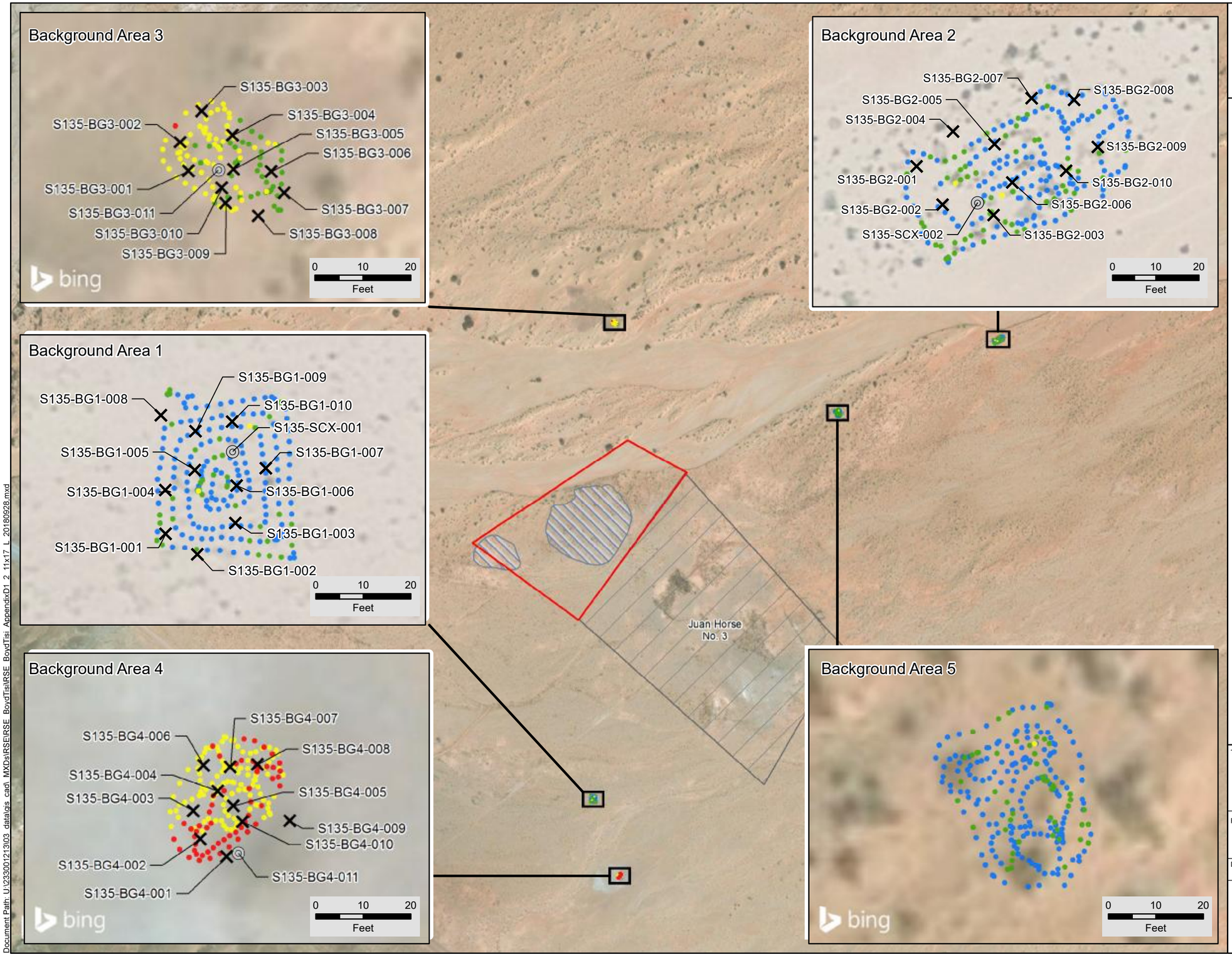

NAVAJO NATION
AUM Environmental
Response Trust-First Phase

LEGEND

- Surface Sample Location
- Subsurface Borehole Location for Background Reference
- Reclaimed Area
- Claim Boundary
- Other Claim Boundary

Gamma Survey

Counts per Minute (CPM)

- 7,071 - 10,000
- 10,042 - 12,500
- 12,502 - 15,000
- 15,006 - 16,886

REFERENCES:

Coordinate System: NAD 1983 UTM Zone 12N

Basemap image accessed from BING Maps imagery web mapping service (http://www.bing.com/maps) on 9/2018.

N
W E
S

0 400 800
Feet

TITLE:
Potential Background Reference Area Gamma Radiation Survey Results and Soil Sample Locations

PROJECT:
Removal Site Evaluation
Boyd Tisi No. 2 Mine Site

DATE: 9/28/2018

DOCUMENT NAME: Removal Site Evaluation Report

AUTHOR: CBB

REVIEWER: EDZ

FIGURE: D.1-2

Stantec

Document Path: U:\233001213\03_data\gis_cad_MXDs\RSE\RSE_BoydTisi\RSE_BoydTisi_AppendixD1_2_11x17_L_20180928.mxd

STATISTICAL EVALUATION

1.0 INTRODUCTION

This statistical evaluation presents the methods used in, and results of, statistical analyses performed on gamma radiation survey results and soil sample analytical results collected from the Boyd Tisi No. 2 Site (Site), and Background Reference Area 3 (BG-3), selected to represent Site conditions as described in Appendix D.1. The statistical evaluation includes comparing Site Survey Area and BG-3 data distributions, and documents the decision process followed to select site-specific investigation levels (ILs). The ILs are used to confirm contaminants of potential concern (COPCs) listed in the *RSE Work Plan*, and to support identification of technologically enhanced naturally occurring radioactive materials (TENORM) at the Site.

2.0 EVALUATIONS

The evaluation process included compiling the results for gamma radiation surveys and soil sample analytical results for both BG-3 and the Survey Area. The gamma radiation survey data and soil sample analytical results for BG-3 and the Survey Area were evaluated to determine the appropriate ILs for the Site as follows:

1. Identify and examine potential outlier values. Potential outlier values were identified statistically and, if justified upon further examination, removed from a dataset prior to further evaluation and calculations. No data were removed from the dataset for the calculations presented in this appendix.

2. Compare data populations between BG-3 and the Survey Area (boxplots, probability plots, hypothesis testing with Wilcoxon Mann-Whitney test). Soil sample and gamma radiation survey results were compared between BG-3 and the Survey Area qualitatively and quantitatively to evaluate similarity or difference in data distributions between the areas, and as a component of evaluating background reference area adequacy and representativeness.

3. Develop descriptive statistics. Descriptive statistics for gamma survey results and soil sample analytical results (e.g., number of observations, mean, maximum, median, etc.) were generated to facilitate qualitative comparisons of soil sample and gamma radiation survey results from one area to another.

4. Select ILs for the Site based on the results of the statistical evaluations.

3.0 RESULTS

The following sections present the evaluation of potential outlier values in the dataset, calculated descriptive statistics, and comparison of data populations between groups in support of determining ILs for use at the Site.

3.1 POTENTIAL OUTLIER VALUES

A potential outlier is a data point within a random sample of a population that is different enough from the majority of other values in the sample as to be considered potentially unrepresentative of the population, and therefore requires further inspection and evaluation. Unrepresentative values in a dataset have potential to yield distorted estimates of population parameters of interest (e.g., means, upper confidence limits, upper percentiles). Therefore, potential outliers in the Site data were evaluated further prior to performing data comparisons (Section 3.2) and developing the descriptive statistics (Section 3.3). In the context of this statistical evaluation, extreme values and statistical outliers are referred to as potential outliers.

A potential outlier value in a sample may be a true representative value in the test population (not a "discrepant" value), simply representing a degree of inherent variation present in the population. Furthermore, a statistical determination of one or more potential outliers does not indicate that the measurements are actually discrepant from the rest of the data set. Therefore, general statistical guidance does not recommend that extreme values (potential outliers) be removed from an analysis solely on a statistical basis. Statistical outlier tests can provide supportive information, but a reasonable scientific rationale needs to be identified for the removal of any potential outlier values (e.g., sampling error, records error, or the potential outlier is determined to violate underlying assumptions of the sampling design, such as the targeted geology).

At BG-3, soil samples were collected randomly. Potential outliers in the BG-3 dataset were examined using boxplots, probability plots and statistical testing. Descriptive statistics were then calculated with and without the potential statistical outliers, as applicable. Finally, the potential outlier values were evaluated to determine if a reason could be found to remove the data points before calculating final statistics. The results of these evaluations are described in the following sections.

In the Survey Area at Boyd Tisi No. 2, soil samples were collected using a judgmental sampling approach. Specifically, some sample locations were selected to characterize areas of higher gamma radiation and, as a result, potential outlier values are not unexpected. Potential outliers in this context mean values that are well-separated from the majority of the data set coming from the far/extreme tails of the data distribution (USEPA, 2016a). Descriptive statistics and comparisons of the Survey Area to BG-3 are still presented for qualitative assessment. However, potential outlier values in the Survey Area are not evaluated further nor removed from the dataset.

3.1.1 Boxplots

Boxplots depict descriptive statistics from a group of data (Figure 1A). The interquartile range is represented by the bounds of the box, the minimum and maximum values, not including potential outlier values (extreme values), are depicted by the whiskers (vertical lines) and any potential outliers are identified as singular dots. Potential outliers in this context are defined as values outside 1.5 times the interquartile range above or below the box.

3.1.1.1 Soil Sample Results Boxplots

Figure 1A. Survey Area and Background Reference Area 3 (BG-3) Soil Sample Boxplots

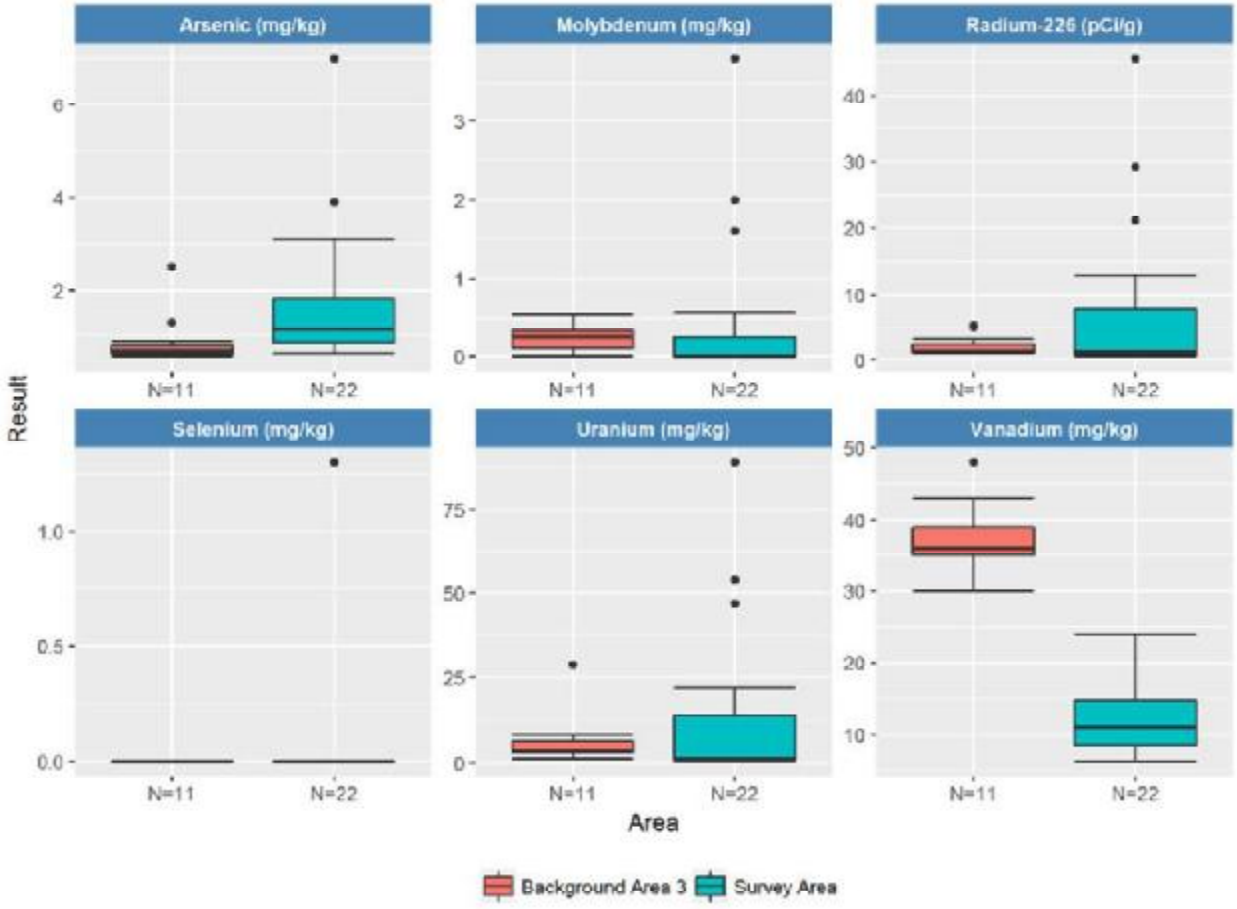

The soil sample boxplots shown on Figure 1A depict differences in the data distribution for analytical constituent concentrations between BG-3 and the Survey Area. Potential high outlier values are shown for both BG-3 and the Survey Area at Boyd Tisi No. 2.

Potential outlier values are of greatest concern in the BG-3 datasets as the data from BG-3 are used to determine the ILs. Background reference area data are presented alone in Figure 1B.

Figure 1B. Background Reference Area 3 (BG-3) Soil Sample Boxplots

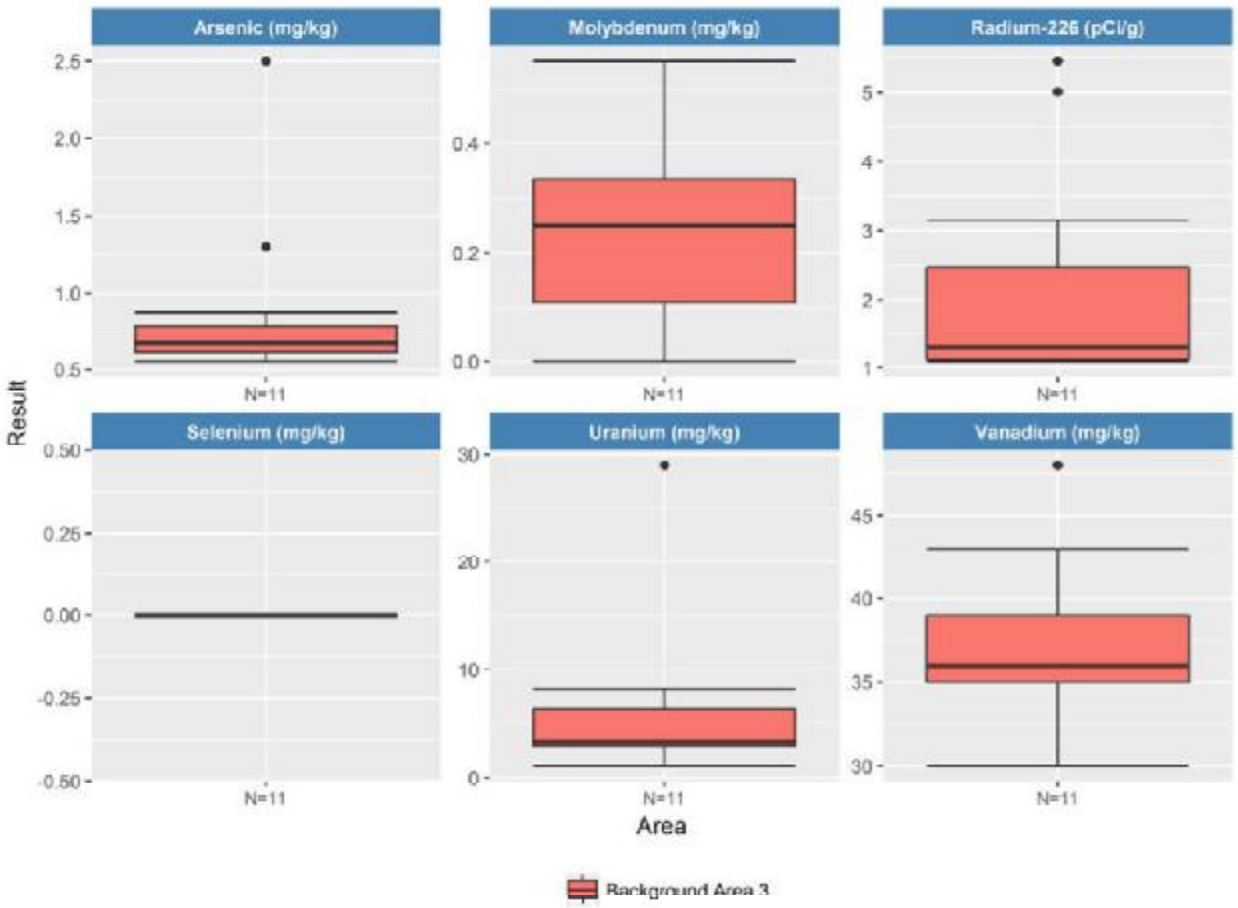

Two values each for arsenic (As) and Ra-226, and one value each for uranium (U) and vanadium (V) are identified as potential outliers (i.e., outside 1.5 times the interquartile range) in the boxplots for the BG-3 datasets at Boyd Tisi No. 2 (refer to Figure 1B).

3.1.1.2 Gamma Radiation Results Boxplots

Figure 2A. Survey Area and Background Reference Area 3 (BG-3) Gamma Radiation Boxplots

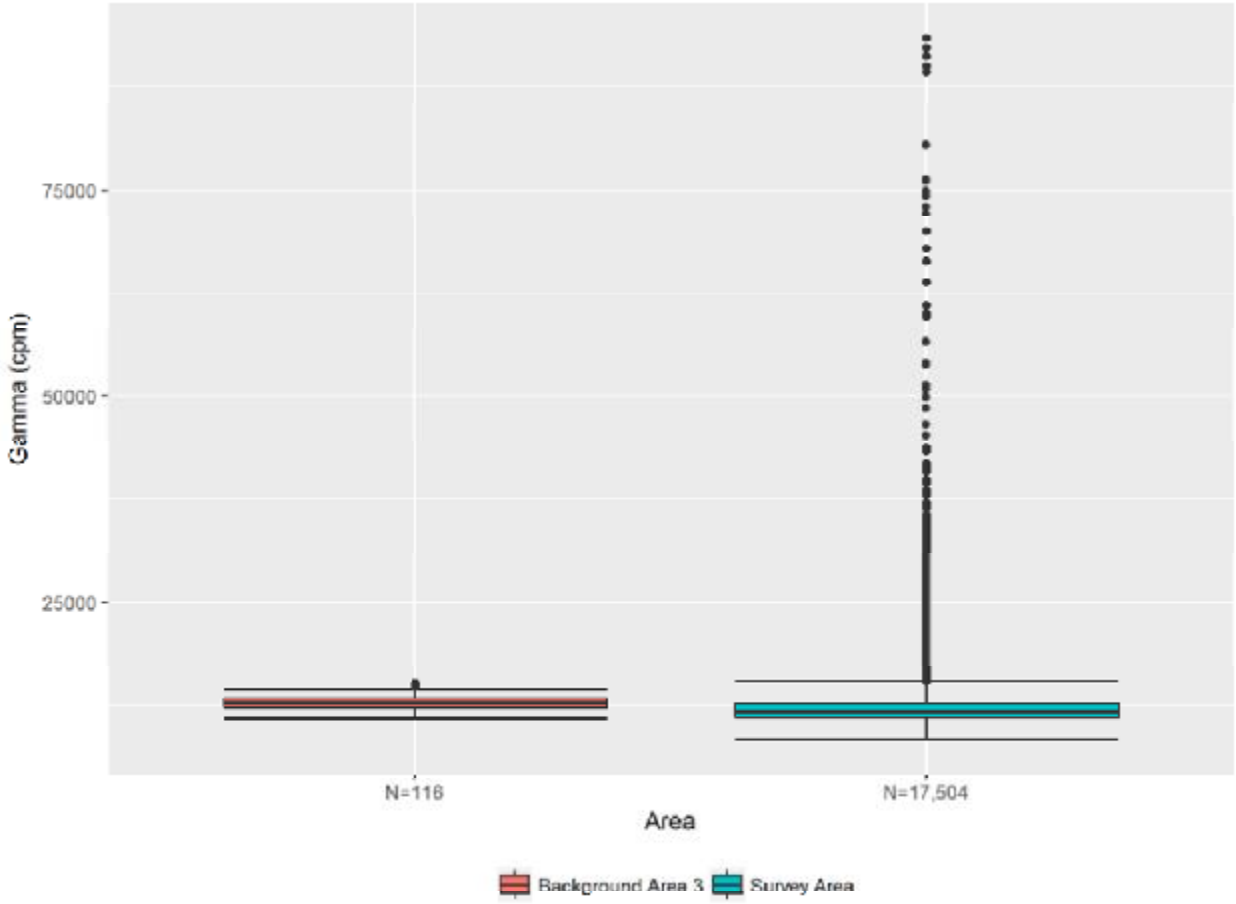

The gamma radiation survey results boxplots shown on Figure 2A depict differences in the data distribution for gamma measurements between BG-3 and the Survey Area. The large number of potential outlier values in the Survey Area boxplot indicate high skewness or possibly non-normally distributed data, instead of outlier values. This has been further evaluated with the use of probability plots in Section 3.1.2 and statistical testing in Section 3.1.4. Based on a review of the Site geology, the gamma radiation potential outlier values observed for the Survey Area data on Figure 2A represent localized areas of higher gamma radiation with respect to other parts of the Survey Area, as would be expected in areas with varying levels of mineralization, naturally occurring radioactive material (NORM), and potential TENORM. Background reference area data are presented alone in Figure 2B.

Figure 2B. Background Reference Area 3 (BG-3) Gamma Radiation Boxplot

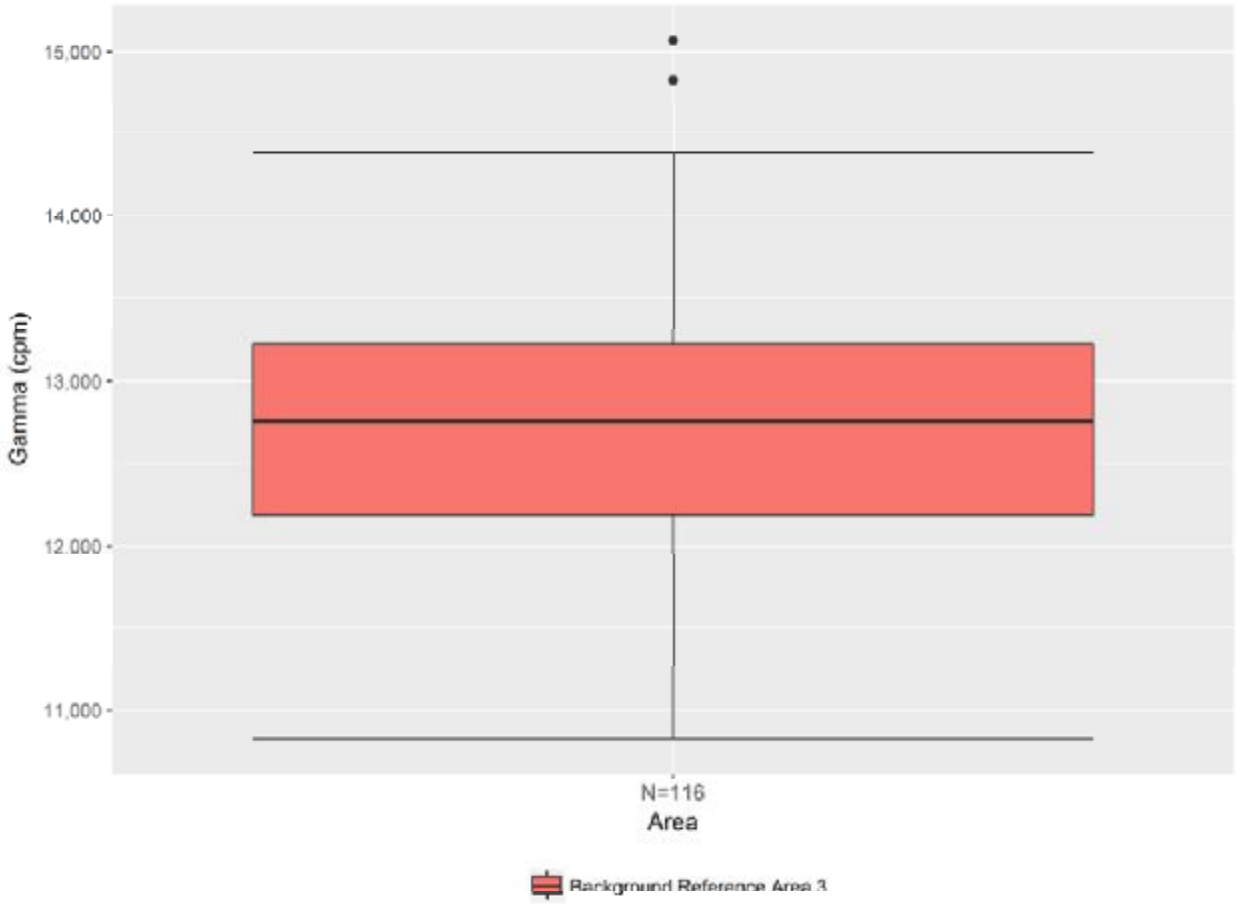

There are two potential outlier values shown for gamma data in the BG-3 dataset; however, they are not very high, represent a very small proportion of the total BG-3 gamma data values, and there is no other compelling rationale to reject these data based on the box-plot evaluation alone.

3.1.2 Probability Plots

The normal probability plot is a graphical technique for assessing whether a data set is approximately normally distributed and where there may be potential outlier values. The data are plotted against a theoretical normal distribution in such a way that the points, if normally distributed, should form an approximate straight line. Curved lines may indicate non-normally or log-normally distributed data, and "S"-shaped lines may indicate two distinct groups within the dataset.

3.1.2.1 Soil Sample Results Probability Plots

Figure 3 depicts the probability plots for metals and Ra-226 results at BG-3.

Figure 3. Background Reference Area 3 (BG-3) Soil Sample Probability Plots

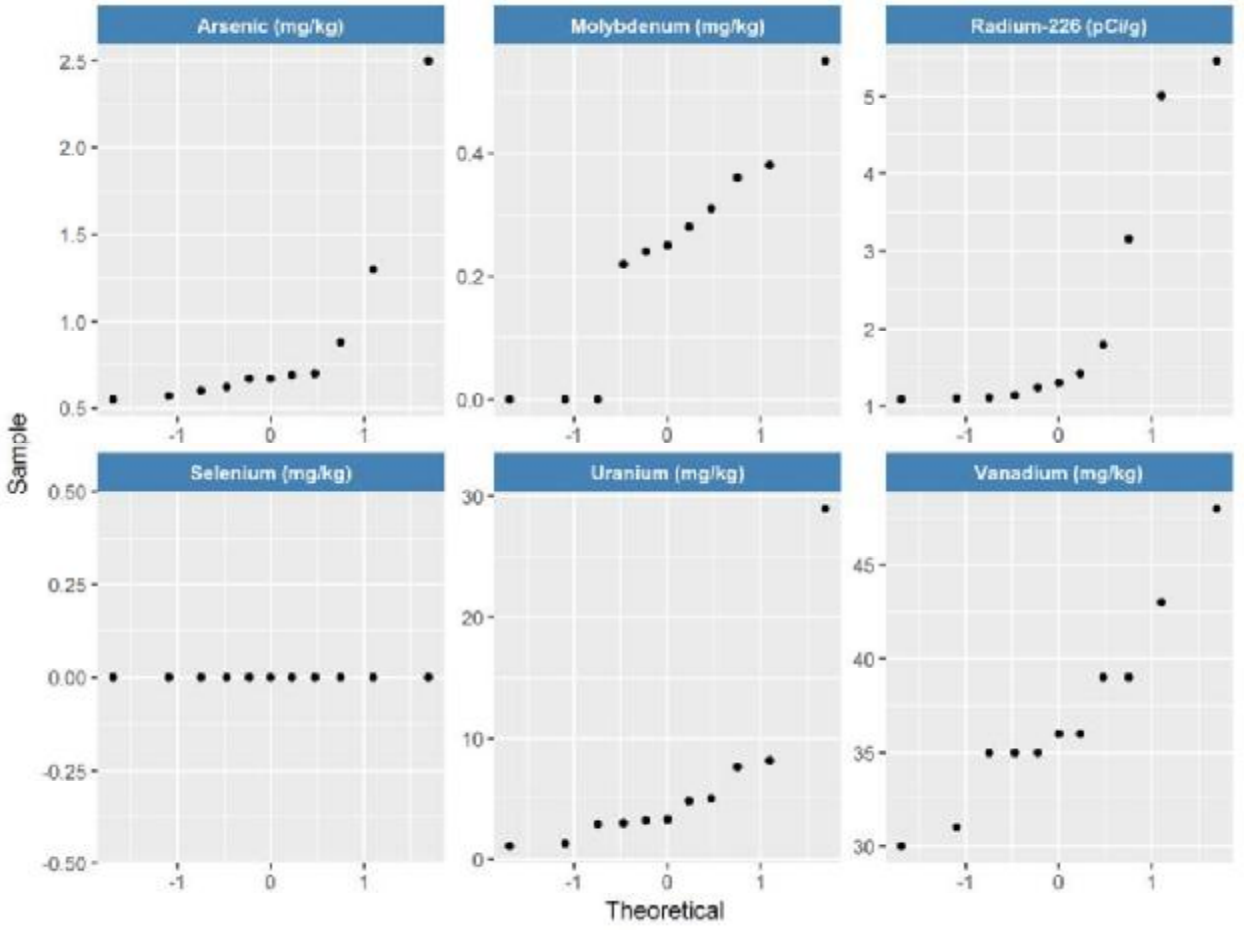

Two values each for arsenic and Ra-226, and one value each for uranium and vanadium, were identified as potential outliers in the boxplots in Figure 1B. When viewed in the probability plots in Figure 3, several of these values do appear to be substantially higher than the rest of their respective datasets. These six values were tested for statistical significance as potential outliers in Section 3.1.3. All 11 soil samples at BG-3 were non-detect for selenium (Se), and three samples were non-detect for molybdenum (Mo).

3.1.2.2 Gamma Survey Results Probability Plots

Figure 4 depicts the probability plots for gamma radiation results at BG-3 and the Survey Area.

Figure 4. Survey Area and Background Reference Area 3 (BG-3) Gamma Probability Plots

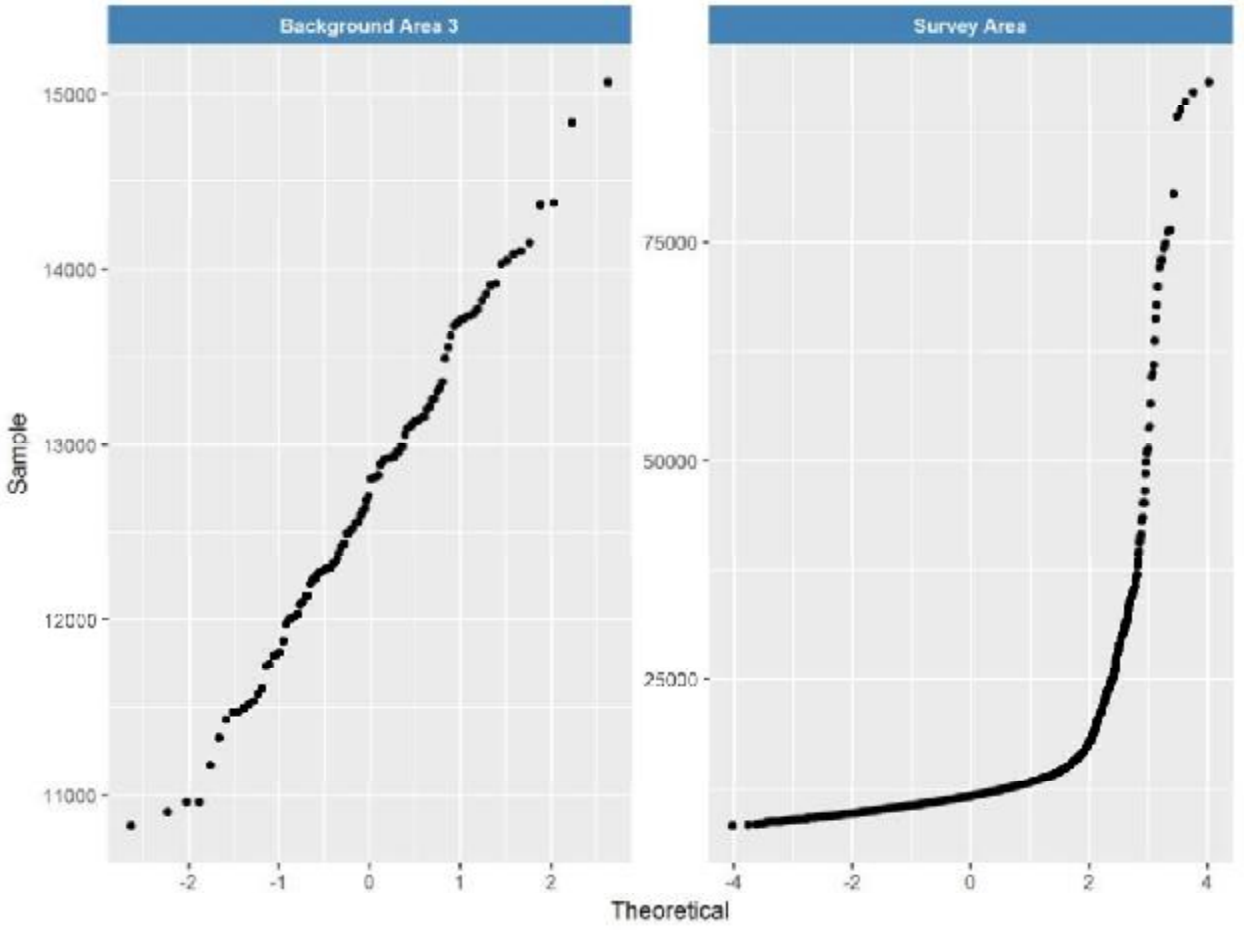

Gamma survey results indicate a generally normal distribution in the BG-3 dataset, and likely a non-normal distribution in the Survey Area dataset (Figure 4). When viewed in the probability plot, the two highest BG-3 gamma values, identified as potential outliers in the boxplot in Figure 2B, conform to the general distribution of the rest of the dataset, suggesting they are representative of BG-3.

The shape and smoothness of the probability plot for the Survey Area gamma results confirms that the gamma radiation data are more log-normally distributed than the BG-3 gamma results. This suggests that these higher values are not potential outliers but rather are representative of the spatial variability of gamma radiation in the Survey Area.

3.1.3 Potential Soil Sample Data Outliers

For the BG-3 dataset, six high results, two values each for arsenic and Ra-226, and one value each for uranium and vanadium, are identified in the boxplots in Figure 1B. These values are:

- Arsenic: 2.5 mg/kg, 1.3 mg/kg
- Ra-226: 5.45 pCi/g , 5.01 pCi/g
- Uranium: 29 mg/kg
- Vanadium: 48 mg/kg

The highest arsenic value, both Ra-226 values, and the uranium values do appear to be potential outliers relative to the rest of their respective datasets when viewed in the probability plots in Figure 3. The lower arsenic value is not substantially higher than the main sample population, and the vanadium value appears to conform to the general distribution of the BG-3 vanadium dataset. However, each of these six values were tested for statistical significance as potential outlier values.

Dixon's Test (Dixon, 1953) is designed to be used for datasets containing only one or two potential outlier values. Therefore, Dixon's Test was performed to the 95% confidence level on each of the six potential soil sample outlier values for arsenic, Ra-226, uranium and vanadium in the BG-3 datasets. The results of Dixon's Test are summarized in Table 1.

Table 1. Summary of Dixon's Test on Maximum Values

Constituent	Location ID	Method	Hypothesis	p_Value	Conclusion
As	S135-BG3-003	Dixon test for potential outliers	Highest value 2.5 is a potential outlier	< 0.05	Hypothesis accepted
As	S135-BG3-003	Dixon test for potential outliers	Second highest value 1.3 is a potential outlier	< 0.05	Hypothesis accepted
Ra-226	S135-BG3-003	Dixon test for potential outliers	Highest value 5.45 is a potential outlier	> 0.05	Hypothesis rejected
Ra-226	S135-BG3-010	Dixon test for potential outliers	Second highest value 5.01 is a potential outlier	> 0.05	Hypothesis rejected
U	S135-BG3-010	Dixon test for potential outliers	Highest value 29 is a potential outlier	< 0.05	Hypothesis accepted
V	S135-BG3-003	Dixon test for potential outliers	Highest value 48 is a potential outlier	> 0.05	Hypothesis rejected

The test confirms that three of the six potential outliers tested, those for arsenic and uranium, are statistically significant (p value <0.05). The statistically significant potential outlier values for arsenic and uranium were further investigated by reviewing sample forms, field notes and laboratory reports. Field staff and field notes indicated nothing abnormal about the locations where these samples were collected, and the laboratory dataset shows no data quality flags were applied to these values that would call their accuracy into question. Therefore, while these

values are outside the interquartile range of their respective datasets (Figure 1B), don't appear to conform with their respective dataset distributions in the probability plots (Figure 3), and are deemed potential statistical outliers by Dixon's Test, they were not removed from the BG-3 datasets because no scientific reason was found to justify removing them from their respective datasets and they are considered representative of the natural variation at BG-3. However, descriptive statistics were calculated with and without these values for comparison (Section 3.3.1).

3.1.4 Potential Gamma Data Outliers

Two potential gamma survey outlier values (high values) are observed for the BG-3 gamma dataset shown in the boxplot in Figure 2B. When viewed in the probability plot in Figure 4, the two values appear to conform to the general distribution of the BG-3 gamma dataset (i.e., the data form a straight line). Because the number of values in the BG-3 gamma dataset is >30, Dixon's Test was not appropriate for testing these potential outlier values. Instead, because the values appear to be generally normally distributed, it was appropriate to identify potential outliers using Z, t and chi squared scoring methods at the 95% confidence level. These tests were performed in the 'Outliers' package in R (Lukasz Komsta, 2011), and the results are summarized in Table 2. The R programming language complements ProUCL in its ability to provide more meaningful and useful graphics and summarizes the results equivalent to ProUCL. Because ProUCL and R packages follow similar statistical procedures, the results are comparable. The interquartile range evaluation (values outside 1.5 times the interquartile range) results are also provided in Table 2.

Table 2. Potential Gamma Outlier Interquartile Range, Z Score, t Score and Chi Squared Score Results

Value (cpm)	Interquartile Range Result	Z Score Result	t Score Result	Chi Sq Score Result
15,070	High	Potential Outlier	Potential Outlier	Potential Outlier
14,830	High	Potential Outlier	Potential Outlier	Potential Outlier

cpm Counts per minute

These two values are deemed potential outliers and represent 2 out of 116 data points (1.7 percent). One possible reason for the potential outliers in a gamma radiation dataset may be the presence of a localized source of radiation within the BG-3 area. This was evaluated by viewing the relative position of the potential outlier values to each other. The two potential outlier values were measured to be within less than 10 feet of each other, supporting the hypothesis of a localized source of radiation at BG-3. While this observation may explain the presence of these values in the dataset, nothing in the field notes or the gamma data records indicates a scientific reason for these values to be excluded from the dataset (e.g., data handling error, equipment malfunction), and there is no record of anomalous soil or other material at BG-3. Therefore, the values are considered representative of the natural variation present at the BG-3 area, and there is no basis to remove them from the BG-3 gamma dataset.

However, descriptive statistics were calculated with and without these values for comparison (Section 3.3.2).

Potential outlier values in the gamma dataset for the Survey Area appear in the Figure 2A boxplots. However, because of the non-linear shape and continuous distribution of gamma results shown in the probability plot in Figure 4, these values are thought to be representative of the heterogeneous nature of radioactive materials within the Survey Area and are not outlier values. Indeed, Figure 4-1 of the RSE Report shows that while gamma results for the majority of the Survey Area are within the range of background, localized areas of elevated gamma results associated with mineralized areas are also present.

3.2 COMPARE DATA POPULATIONS

Group comparison analyses provide insight into the relative concentrations of constituents between the background reference area and the Survey Area. Observations made during these analyses may indicate the need for further evaluation or discussion regarding the influence of potential outlier values, and the use of background data. For instance, if two or more background reference areas were determined to be statistically similar to each other, these data could be combined to calculate more robust statistics (not a factor in this evaluation, as one background reference area was selected to represent the Survey Area). Alternatively, testing of this kind may reveal background concentrations statistically higher than corresponding Survey Area concentrations, requiring additional interpretation or modifications in the use of background reference area datasets. Finally, results of these evaluations are a component of determining background reference area representativeness, though statistical comparisons are not the only factors to be considered in judging representativeness. Factors such as geologic materials, aspect, vegetation cover, wind direction and soil depth are all important to the selection of background reference areas.

Group comparisons, therefore, are considered instructive as a component of the overall evaluation of soil sample and gamma radiation survey results collected from BG-3 and the Survey Area. Relative data distributions were investigated by evaluating the boxplots and probability plots in Figures 1A through 4, and by hypothesis testing with the non-parametric Mann-Whitney test, as applicable.

3.2.1 Evaluation of Boxplots

3.2.1.1 Soil Sample Boxplots

When interpreting the soil sample boxplots in Figures 1A and 1B , it is important to note that samples at BG-3 were collected randomly, while samples in the Survey Area were collected judgmentally. Observations from the boxplots in Figures 1A and 1B indicate:

- Arsenic. Arsenic results appear elevated in the Survey Area with respect to BG-3.
- Molybdenum. Molybdenum results appear similar in BG-3 with respect to the Survey Area.
- Ra-226. Ra-226 results appear elevated in the Survey Area with respect to BG-3.
- Selenium. Selenium results appear similar in BG-3 with respect to the Survey Area.
- Uranium. Uranium results appear elevated in the Survey Area with respect to BG-3.
- Vanadium. Vanadium is markedly elevated in BG-3 relative to the Survey Area.

3.2.1.2 Gamma Radiation Boxplots and Probability Plots

The boxplot comparison in Figures 2A and 2B suggests that median and interquartile range values are similar between BG-3 and the Survey Area. Gamma radiation data distributions between BG-3 and the Survey Area shown on Figure 4 are not similar (normal vs. non-normal, respectively). These observations are further evaluated in Section 3.2.2 using the non-parametric Mann-Whitney test.

3.2.2 Mann-Whitney Testing

The Mann-Whitney test (Bain and Engelhardt, 1992) is a nonparametric test used for determining whether a difference exists between two or more population distributions. This test is also known as the Wilcoxon Rank Sum (WRS) test. This test evaluates whether measurements from one population consistently tend to be larger (or smaller) than those from another population. This test was selected over other comparative tests such as the Student's t test and analysis of variance (ANOVA) because it remains robust in the absence of required assumptions that these two tests require such as normally distributed data and equality of variances.

Soil samples at BG-3 were collected randomly, while soil samples in the Survey Area were collected judgmentally (see Section 3.1). Mann-Whitney testing is not appropriate for comparative analysis if one or both groups contain data collected using a judgmental approach. Therefore, the Mann-Whitney test was not performed for soil sample data between BG-3 and the Survey Area. Gamma radiation data, however, do represent non-judgmental sampling, and so the Mann-Whitney test was appropriate for comparison between BG-3 and the Survey Area (Table 3). Therefore, the test was performed 2-sided on the BG-3 and Survey Area gamma radiation data. The two-sided test accounts for results from one group being lower or

higher than any other group (i.e., the hypothesis tested is whether two groups differ, independent of which group is higher). A test result p-value of 0.05 or smaller indicates that a significant difference exists between any two groups that are compared. Results of Mann-Whitney testing are presented in Table 3.

Table 3. Summary of Gamma Survey Mann-Whitney Test Results

Comparison	p_Value	Description
Background Reference Area 3 (BG-3) vs Survey Area	<0.05	Significant Difference
Background Reference Area 3 (BG-3) vs Background Reference Area 3 (BG-3) Potential Outliers Excluded	0.822	No Significant Difference
Background Reference Area 3 (BG-3) Potential Outliers Excluded vs Survey Area	<0.05	Significant Difference

The results of the Mann-Whitney testing on gamma radiation survey results in Table 3 indicate the following:

- Gamma results are statistically elevated in the Survey Area with respect to BG-3. This result is likely due to the presence of radiation coincident with historic waste piles in the central and northwest portions of the Survey Area. In addition, BG-3 may not fully represent the degree of natural mineralization present at the Survey Area (see RSE Report Section 3.2.2.2). This latter point does not prohibit use of the gamma ILs calculated from BG-3, but this observation should be considered as Site conditions are further evaluated for remediation.

- The inclusion or removal of potential outlier values has no effect on the results of the Mann-Whitney test at BG-3.

- Results of the Mann-Whitney test between BG-3 and the Survey Area show there is a statistically significant difference in gamma results between BG-3 and the Survey Area with and without potential outlier values included.

3.3 DESCRIPTIVE STATISTICS

Descriptive statistics, including the upper confidence limit (UCL) of the mean and the 95-95 upper tolerance limit (UTL), were calculated from gamma survey data and soil sample results. Descriptive statistics are important for any data evaluation to present the basic statistics of a dataset with regards to its limits (maximum and minimum), central tendencies (mean and median) as well as data dispersion (coefficient of variance). The ILs for the Site also are taken from the descriptive statistics, namely the 95-95 UTL. The UTL value is selected by ProUCL as the maximum value in the dataset when the data are determined to be non-parametric. The parameters and constituents evaluated include gamma radiation, arsenic, molybdenum, selenium, uranium, vanadium, and Ra-226.

Statistics were calculated using Environmental Protection Agency (EPA) ProUCL version 5.1 software. Statistical methodology employed by the software is documented in the *ProUCL*

Version 5.1 Technical Guide Statistical Software for Environmental Applications for Data Sets with and without Nondetect Observations (EPA, 2015). In the case of non-detect results, ProUCL does not recommend detection limit substitution methods (e.g., 1/2 the detection limit), considering these methods to be imprecise and out of date (EPA, 2015). The software instead calculates descriptive statistics for the detected results only, and follows various methods accordingly to calculate UCL and UTL values based on the percentage of non-detect results present in the dataset and on the distribution of the data (i.e., normal, lognormal, gamma, or unknown distribution).

Descriptive statistics for soil samples and gamma radiation survey results have been calculated with and without the potential outlier values previously identified, as applicable. Select descriptive statistics for these constituents are presented in Tables 4 and 5.

3.3.1 Soil Sample Analytical Results Summary

Table 4 presents the descriptive statistics output from the ProUCL software for soil sample results.

Table 4. Summary of Soil Sampling Results

Area	Statistic	Arsenic (mg/kg)	Molybdenum (mg/kg)	Selenium (mg/kg)	Uranium (mg/kg)	Vanadium (mg/kg)	Radium-226 (pCi/g)
Background Reference Area 3 (BG-3) All Data	Total Number of Observations	11	11	11	11	11	11
	Percent Non-Detects	--	27%	100%	--	--	--
	Minimum[1]	0.550	--	--	1.10	30.0	1.09
	Minimum Detect[2]	--	0.220	--	--	--	--
	Mean[1]	0.886	--	--	6.32	37.0	2.16
	Mean Detects[2]	--	0.324	--	--	--	--
	Maximum[1]	2.50	--	--	29.0	48.0	5.45
	Maximum Detect[2]	--	0.550	--	--	--	--
	Distribution	Normal	Normal	Not Calculated	Gamma	Normal	Unknown
	Coefficient of Variation[1]	0.649	--	--	1.24	0.139	0.754
	CV Detects[2]	--	0.332	--	--	--	--
	UCL Type	95% Student's-t UCL	95% KM (t) UCL	Not Calculated	95% Adjusted Gamma UCL	95% Student's-t UCL	95% Chebyshev (Mean, Sd) UCL
	UCL Result	1.20	0.350	Not Calculated	12.4	39.8	4.31
	UTL Type	UTL Normal	UTL KM Normal	--	UTL Gamma WH	UTL Normal	UTL Non-Parametric
	UTL Result	2.51	0.577	--	34.1	51.5	5.45
Background Reference Area 3 (BG-3) Excluding Potential Outliers[3]	Total Number of Observations	9	--	--	10	--	--
	Minimum[1]	0.550	--	--	1.10	--	--
	Mean[1]	0.661	--	--	4.05	--	--
	Maximum[1]	0.88	--	--	8.20	--	--
	Distribution	Normal	--	--	Normal	--	--
	Coefficient of Variation[1]	0.148	--	--	0.593	--	--
	UCL Type	95% Student's-t UCL	--	--	95% Student's-t UCL	--	--
	UCL Result	0.722	--	--	5.44	--	--
	UTL Type	UTL Normal	--	--	UTL Normal	--	--
	UTL Result	0.957	--	--	11.1	--	--
Survey Area	Total Number of Observations	22	22	22	22	22	22
	Percent Non-Detects	--	68%	95%	--	--	--
	Minimum[1]	0.610	--	--	0.380	6.30	0.570
	Minimum Detect[2]	--	0.220	1.30	--	--	--
	Mean[1]	1.73	--	--	12.1	12.1	6.70
	Mean Detects[2]	--	1.24	1.30	--	--	--
	Maximum[1]	7.00	--	--	89.0	24.0	45.6
	Maximum Detect[2]	--	3.80	1.30	--	--	--
	Distribution	Lognormal	Normal	Not Calculated	Unknown	Gamma	Unknown
	Coefficient of Variation[1]	0.860	--	--	1.89	0.419	1.72
	UCL Type	95% H-UCL	95% KM (t) UCL	Not Calculated	95% Chebyshev (Mean, Sd) UCL	95% Adjusted Gamma UCL	95% Chebyshev (Mean, Sd) UCL
	UCL Result	2.25	0.776	Not Calculated	33.4	14.3	17.4
	UTL Type	UTL Lognormal	UTL KM Normal	Not Calculated	UTL Non-Parametric	UTL Gamma WH	UTL Non-Parametric
	UTL Result	6.06	2.52	Not Calculated	89.0	26.1	45.6

[1] This statistic is reported by ProUCL when the dataset contains 100 percent detections.
[2] This statistic is reported by ProUCL when non-detect values exist in the dataset. The value reported is calculated using detections only.
[3] No potential statistical outliers were identified for molybdenum, selenium, vanadium or Ra-226 in this area.

CV Coefficient of variation
KM Kapplan Meier
mg/kg Milligrams per kilogram
-- Not applicable
pCi/g Picocuries per gram
WH Wilson Hilferty

Note The UTL result that is shown on the table is based on the output from ProUCL. ProUCL evaluates the data and provides all possible UCLs from its UCL module for three possible data distributions, then identifies a recommended UCL value. ProUCL does not identify a recommended UTL value. The UTLs are therefore based on the distribution of the recommended UCL. Please refer to *ProUCL Version 5.1 Technical Guide Statistical Software for Environmental Applications for Data Sets with and without Non-detect Observations* (EPA, 2015) for further information

As described in Section 3.2.1.1, arsenic, uranium, and Ra-226 results appear elevated for the Survey Area relative to BG-3. Results for molybdenum in the Survey Area are similar to those for BG-3, selenium results were 95% non-detect for the Survey Area and all non-detect for BG-3, and vanadium results are higher in BG-3 than the Survey Area. However, an important consideration when comparing concentrations of metals and Ra-226 between BG-3 and the Survey Area is that the background reference area was selected to be representative of the geology present in the region around the Site, whereas the Site was selected as a mine claim because it is in an area of mineralized bedrock likely to have localized, naturally elevated uranium concentrations (see RSE Report Section 3.2.2.2). In addition, soil sampling for metals and Ra-226 in the background reference area was conducted in a random manner, whereas soil sampling for metals and Ra-226 in the Survey Area was judgmental. As a result, it is not surprising that some metals and Ra-226 concentrations in the Survey Area appear to be elevated relative to concentrations in BG-3. It should be noted, however, that concentrations of several of the metals measured in the Survey Area are within the range of metals concentrations typically observed in Western U.S. soils (United States Geological Survey [USGS], 1984):

- Arsenic (mean = 5.5 mg/kg; range <0.10 – 97 mg/kg)
- Molybdenum (mean = 0.85 mg/kg; range <3 – 7 mg/kg)
- Selenium (mean = 0.23 mg/kg; range <0.1 – 4.3 mg/kg)
- Uranium (mean = 2.5 mg/kg; range 0.68 – 7.9 mg/kg)
- Vanadium (mean = 70 mg/kg; range 7 – 500 mg/kg)

As shown in Table 4, maximum detected concentrations of arsenic, molybdenum, selenium and vanadium in the Survey Area are within typical ranges reported for Western U.S soils. Exceptions to the above are uranium and Ra-226; elevated concentrations of these constituents in the Survey Area are likely attributable to residual uranium concentrations and Ra-226 concentrations associated with the historic waste piles in the central and northwest portions of the Survey Area, as well as a higher degree of natural mineralization within the Survey Area relative to BG-3.

3.3.2 Gamma Radiation Results Summary

Table 5 presents the descriptive statistics output from the ProUCL software for the gamma radiation survey results.

Table 5. Summary of Walk-Over Gamma Results

Area	Statistic	Gamma (cpm)
Background Reference Area 3 (BG-3) All Data	Total Number of Observations	116
	Minimum	10,829
	Mean	12,727
	Median	12,758
	Maximum	15,070
	Distribution	Normal
	Coefficient of Variation	0.068
	UCL Result	12,861
	UTL Type	UTL Normal
	UTL Result	14,373
Background Reference Area 3 (BG-3) Excluding Potential Outliers	Total Number of Observations	114
	Minimum	10,829
	Mean	12,688
	Median	12,698
	Maximum	14,377
	Distribution	Normal
	Coefficient of Variation	0.065
	UCL Result	12,816
	UTL Type	UTL Normal
	UTL Result	14,250
Survey Area	Total Number of Observations	17,504
	Minimum	8,366
	Mean	12,250
	Median	11,717
	Maximum	93,363
	Distribution	Normal
	Coefficient of Variation	0.274
	UCL Result	12,292
	UTL Type	UTL Normal
	UTL Result	17,843

cpm Counts per minute
WH Wilson Hilferty

As noted for metals and Ra-226 in Section 3.3.1, gamma results measured within the Survey Area appear to be elevated relative to gamma results measured in BG-3 because background reference areas were selected to represent the geology present in the region around the Site, whereas the Site was selected as a mine claim because it is in an area of mineralized bedrock likely to have localized naturally elevated uranium concentrations. Therefore, it's not surprising that gamma results within the Survey Area are somewhat higher than gamma results at BG-3. Elevated gamma results in portions of the Survey Area are likely attributable to historic waste piles, as well as a higher degree of natural mineralization within the Survey Area relative to BG-3.

4.0 INVESTIGATION LEVELS

The calculated 95-95 UTL values described in Section 3.3 are used as the ILs for gamma measurement results and soil sampling results because they reflect the natural variability in the background data, and provide an upper limit from background data to be used for single-point comparisons to Survey Area data. The calculated ILs are summarized below.

The ILs for analytical results of soil samples and gamma radiation results in the Survey area, based on BG-3, are presented in Tables 4 and 5 in Section 3.3 and are as follows:

- Arsenic (mg/kg): 2.51
- Molybdenum (mg/kg): 0.577
- Selenium (mg/kg): None (all results non-detect)
- Uranium (mg/kg): 34.1
- Vanadium (mg/kg): 51.5
- Ra-226 (pCi/g): 5.45
- Gamma radiation measurements (cpm): 14,373

5.0 REFERENCES

Bain, L.J. and Engelhardt, M. (1992). *Introduction to probability and Mathematical Statistics*. Second Edition. Duxbury Press, California.

Dixon, W.J. (1953). *Processing Data for Outliers*. Biometrics 9: 74-89.

EPA, (2015). *ProUCL Version 5.1 Technical Guide Statistical Software for Environmental Applications for Data Sets with and without Nondetect Observations*. https://www.epa.gov/sites/production/files/2016-05/documents/proucl_5.1_tech-guide.pdf

Lukasz Komsta (2011). *Outliers: Tests for outliers*. R package version 0.14. https://CRAN.R-project.org/package=outliers

R Core Team (2016). *R: A language and environment for statistical computing*. R Foundation for Statistical Computing, Vienna, Austria. URL https://www.R-project.org/.

Schiffler, R.E (1998). *Maximum Z scores and outliers*. Am. Stat. 42, 1, 79-80.

H. Wickham (2009). ggplot2: *Elegant Graphics for Data Analysis*. Springer-Verlag New York.

Appendix E Cultural and Biological Resource Clearance Documents

BIOLOGICAL EVALUATION

For the Proposed:

Boyd Tisi No. 2 Western
Abandon Uranium Mine - Environmental Response Trust Project

Sponsored by:

MWH Global / Stantec



Prepared by:

Adkins Consulting, Inc.
180 East 12th Street, Unit 5
Durango, Colorado 81301

Revised August 2016
June 2016

TABLE OF CONTENTS

1. Introduction and Project Background 4
2. Project Description 4
2.1. Location 4
2.2. Estimated Disturbance 5
3. Affected environment 5
3.1. Proposed Project Area (PPA) 5
4. Threatened, Endangered, and Sensitive Species Evaluation 7
4.1. Methods 7
4.2. ESA-Listed Species Analysis and Results 8
4.3. NESL Species Analysis and Results 9
4.4. Migratory Bird Species 12
5. Effects Analysis 14
5.1. Direct and Indirect Effects 14
5.2. Cumulative Effects 15
6. Conclusions 16
7. Recommendations for avoidance 16
8. Supporting Information 17
8.1. Consultation and Coordination 17
8.2. Report Preparers and Certification 17
8.3. References 18

Appendix A. Maps
Appendix B. Photographs
Appendix C. Redente Plant Survey Report
Appendix D. NESL Letter

This page intentionally left blank.

1. INTRODUCTION AND PROJECT BACKGROUND

The federal Endangered Species Act (ESA) of 1973, 16 U.S.C. §1531 et seq., requires all federal departments and agencies to conserve threatened, endangered, and critical and sensitive species and the habitats on which they depend, and to consult with the U.S. Fish and Wildlife Service (USFWS) on all actions authorized, funded, or carried out by each agency to ensure that the action will not likely jeopardize the continued existence of any threatened and endangered species or adversely modify critical habitat [USFWS 1998]. This report describes the potential for federal ESA-listed species and Navajo Nation Endangered Species List (NESL) endangered, threatened, candidate, or otherwise designated sensitive flora and fauna to occur in the proposed action area. The action area with regard to the ESA is defined as any area that may be directly or indirectly impacted by the proposed action [50 CFR §402.02]. This report is intended to provide the responsible official with information to make determinations of effect on species with special conservation status.

As the result of settlement by the United States, the Navajo Nation AUM Environmental Response Trust—First Phase was established to evaluate certain abandoned uranium mines located across the Navajo Nation. The project requires investigation of these sites prior to potential remediation activities in the future. MWH Global, a division of Stantec (MWH), will conduct exploratory activities at the Boyd Tisi No. 2 Western abandoned uranium mine (AUM) such as pedestrian gamma surveys, mapping, well sampling, and surface soil sampling within the mine claim boundaries and surrounding buffer zone. Subsequent earthwork and long term monitoring may be involved after final approval by the Navajo Nation Environmental Protection Agency (NNEPA) in conjunction with the U. S. Environmental Protection Agency (USEPA).

In support of this project, MWH contracted Adkins Consulting, Inc. (ACI) to conduct surveys for ESA-listed fauna and Navajo Nation Endangered Species List (NESL) endangered, threatened, candidate, or otherwise designated sensitive fauna. MWH contracted Redente Ecological Consultants (Redente) to conduct surveys for NESL and ESA-listed plant species. The results of the 2016 Redente biological investigations will be incorporated in this report and can be found in entirety attached as Appendix C.

The objectives of the biological surveys were as follows:

- To compile a list of ESA-listed or NESL species potentially occurring in the proposed action area.
- To provide a physical and biological description of the proposed action area.
- To determine the presence of ESA-listed or NESL species in the proposed action area.
- To assess potential impacts the proposed action may have on any ESA-listed or NESL species present in the area.
- To assess potential impacts to species protected under the Migratory Bird Treaty Act (MBTA).

2. PROJECT DESCRIPTION

2.1. Location

Boyd Tisi No. 2 Western is located in Coconino County, Arizona approximately 50 miles north of Flagstaff, Arizona at an elevation of approximately 4,216 ft. Global Positioning System coordinates are 35° 51’ 42” N by 111° 22’ 18”W, NAD 83. The site is located on Navajo Tribal Trust Lands within the Bureau of Indian Affairs (BIA) Tuba City Agency. The legal description of the project surface location is as follows: Section 30, Township 29 North, Range 10 West, Gila and Salt River Meridian. Project area maps are provided in Appendix A.

2.2. Estimated Disturbance

MWH proposes a phased approach to scientific investigations at the Boyd Tisi No. 2 Western AUM. The study area encompasses the claim boundary and a 100-foot perimeter buffer zone for a total of approximately 13.3 acres. Please refer to Appendix A for maps delineating the mine claim boundary and buffer zone.

The project will also include a walkover survey for gamma radiation across a small area known as the "background area". Please refer to Appendix A for a map of the background sample areas. A few soil samples approximately 3 inches in diameter and up to 6 inches deep will be collected by hand in these areas.

- Phase I: Spring of 2016 activity would entail pedestrian biological surveys and land surveying. Fall of 2016 work would entail pedestrian activity including gamma surveys, mapping, well sampling, and surface soil sampling. In 2016 there will be a maximum of 5 people onsite for no more than 5 to 7 days. Surface disturbance would be minimal and noise would be light.

- Phase II: Beginning in 2017, equipment including an excavator or small mobile drilling unit may be used to collect one or more soil samples. Up to 8 people may be onsite all day for a period of one week. Equipment travel would be confined to a temporary travel corridor approximately 20 feet in width. Within the travel corridor, vegetation and surface soil would sustain some disturbance but would not be bladed or bulldozed. During Phase II, noise may be moderate for a short duration, and surface disturbance will be light to moderate but confined to a minimal footprint within the study area. No permanent structures will be left on site.

3. AFFECTED ENVIRONMENT

3.1. Proposed Project Area (PPA)

The proposed project area (PPA) at Boyd Tisi No. 2 Western includes the mine boundary with a 100-foot buffer zone surrounding the perimeter of the boundary. The affected environment or action area includes any area that may be directly or indirectly impacted by the proposed activities. Project area maps are provided in Appendix A.

3.1.1. Environmental Setting

Project activities would occur in northeastern Arizona located within the USEPA designated Arizona/New Mexico Plateau Level III Ecoregion. The Arizona/New Mexico Plateau occurs primarily in Arizona, Colorado, and New Mexico, with a small portion in Nevada. This ecoregion is approximately 45,870,500 acres, and the elevation ranges from 2,165 to 11,949 feet. The ecoregion's landscapes include low mountains, hills, mesas, foothills, irregular plains, alkaline basins, some sand dunes, and wetlands. This ecoregion is a large transitional region between the semiarid grasslands to the east, the drier shrublands and woodlands to the north, and the lower, hotter, less vegetated areas to the west and south.

Boyd Tisi No. 2 Western is situated within a shrubland / semiarid grassland valley just east of the Little Colorado River. A site specific description is presented below which is added with permission from the Redente site investigation report *Plant Survey Report for Species of Concern at Boyd Tisi #2 Project Site* (Redente 2016) found in Appendix C.

Climate

The climate of the Boyd Tisi #2 site is classified as semi-arid, with an average annual precipitation in Coconino County of 11.3 inches with the greatest precipitation months occurring in July and August (USDA 1983). Average annual temperature is 54° F, which is much lower that the Arizona average annual temperature of 65.8^{o} F.

Soils

The U.S. Department of Agriculture (USDA) Soil Survey for Coconino County was published in 1983 and covers portions of central Coconino County and extends to approximately 0.3 km south of the Boyd Tisi #2 site. Based on the topographic features of the site, the general mapping unit for the area may be Epikom-Tours-Purgatory (USDA 1983). This map unit is mainly plateaus and mesas with slopes that range from 0 to 15%. The soils in this map unit are shallow and well drained and formed in alluvial and eolian deposits derived dominantly from sandstone and sandy shale.

Land Use

The land type on the Body Tisi #2 site is rangeland and the principal land use is domestic grazing. The area is heavily grazed and the site is in fair to poor condition.

Flora

Vegetation communities found within the region include shrublands with big sagebrush, rabbitbrush, winterfat, shadscale saltbush, and greasewood; and grasslands of blue grama, Western wheatgrass, green needlegrass, and needle-and-thread grass. Higher elevations may support piñon pine and juniper woodlands. The Boyd Tisi No. 2 Western site is sparsely vegetated grassland with sporadic shrubs.

A site specific description is presented below which is added with permission from the Redente site investigation report *Plant Survey Report for Species of Concern at Boyd Tisi #2 Project Site* (Redente 2016) found in Appendix C.

Plant Community Type

The vegetation on the Boyd Tisi #2 site is part of the Grama-galleta steppe according to Bailey (1980). The most common species on the site include black grama (*Bouteloua eriopoda*), blue grama (*Bouteloua gracilis*), alkali sacaton (*Sporobolus airoides*), galleta (*Pleuraphis jamesii*), fourwing saltbush (*Atriplex canescens*), rubber rabbitbrush (*Ericameria nauseosa*), and Mormon tea (*Ephedra viridis*)).

Fauna

Wildlife or evidence of wildlife observed within the PPA included common raven (*Corvus corax*), cottontail rabbit (S*ylvilagus* sp.), coyote (*Canis latrans*), mule deer (*Odocoileus hemionus*), turkey vulture (*Cathartes aura*), and Western scrub-jay (*Aphelocoma californica*). No signs of consistent raptor use such as whitewash or nests were observed. No prairie dog (*Cynomys* sp.) burrows were recorded within the PPA or immediate vicinity. Further analysis of sensitive species can be found in Section 4 of this document.

Hydrology/Wetlands

Under Executive Orders 11988 and 11990, Federal agencies are required to minimize the destruction, loss, or degradation of wetlands and floodplains, and preserve and enhance their natural and beneficial values. These habitats should be conserved through avoidance, or mitigated to ensure that there would be no net loss of wetlands function and value.

Run-off from precipitation in the project area generally drains through an unnamed wash to the intermittent / ephemeral Little Colorado River, located approximately 0.6 miles west of the PPA. There are no wetlands, seeps, springs, or riparian areas within the proposed project area. Proposed project activities would contribute to a negligible increase in sedimentation down gradient of the PPA. ESA-listed

fish species are not known to occur within the Little Colorado River near the PPA, nor is it considered critical habitat of any ESA-listed species near the PPA.

Cumulative impacts to surface waters would be negligible. Surface-disturbing activities other than the proposed action that may cause accelerated erosion include, but are not limited to, construction of roads, other facilities, and installation of trenches for utilities; road maintenance such as grading or ditch-cleaning; public recreational activities; vegetation manipulation and management activities; natural and prescribed fires; and livestock grazing. Because the proposed action would have a negligible impact to downstream surface water quality, the cumulative impact also would be negligible when added to other past, present, and reasonably foreseeable activities.

4. THREATENED, ENDANGERED, AND SENSITIVE SPECIES EVALUATION

The Endangered Species Act (ESA) of 1973 requires all federal departments and agencies to conserve threatened, endangered, and critical and sensitive species and the habitats on which they depend, and to consult with the U.S. Fish and Wildlife Service (USFWS) on all actions authorized, funded, or carried out by the agency to ensure that the action will not likely jeopardize the continued existence of any threatened and endangered species or adversely modify critical habitat.

4.1. Methods

4.1.1. Off-site Methods

Prior to conducting fieldwork, ACI compiled data on animal species listed under the ESA. Informal consultation was initiated by requesting an Official Species List from the USFWS Information, Planning, and Conservation System (IPaC) website (http://ecos.fws.gov/ipac/). ACI received the Official Species List (02EAAZ00-2016-SLI-0355) on April 7, 2016. See Table 1 for USFWS-listed threatened, endangered, or candidate species with potential to occur in the PPA.

The Navajo Nation Department of Fish and Wildlife (NNDFW), Navajo Natural Heritage Program (File # 15mwh101) sent MWH a NESL information letter dated 29 December, 2015. The letter suggests biologists determine habitat suitability within the project area for the provided list of species of concern with potential to occur on the 7.5-minute quadrangles containing the project boundaries. The Navajo species of concern listed in the NESL information letter are included in Table 2.a below.

In addition to the above listed species, ACI reviewed species protected under the MBTA with potential to occur in the proposed project and action area (Table 3).

4.1.2. On-site Survey Methods

An on-site pedestrian survey was conducted in March 2016 by ACI personnel permitted by NNDFW. The purpose of the survey was to assess habitat potential for ESA-listed or NESL animal species. Field biologists with considerable experience identifying local wildlife species lead survey crews. The survey consisted of walking transects ten feet apart throughout the PPA including a survey buffer of approximately 50 feet beyond the PPA edge of disturbance. The surrounding areas were visually inspected with binoculars for nests, raptors, or past signs of raptor use. Weather conditions were clear with a slight breeze. All plant and wildlife species observed in the action area were recorded, and digital photos were taken (Appendix B).

Redente conducted surveys for plant species of concern. The results of the 2016 Redente biological investigations will be incorporated in Sections 4.2 and 4.3 of this report and can be found in entirety attached as Appendix C.

4.2. ESA-Listed Species Analysis and Results

4.2.1. Species from the USFWS IPaC Official Species List

Table 1 includes ESA-listed species that have the potential to occur in the project area based on the USFWS IPaC Official Species List. Biologists evaluated habitat suitability within and surrounding the PPA for the species in Table 1.

Table 1: USFWS IPaC Official Species List for the Boyd Tisi No. 2 Western Project

Species	Status	Occurrence Within Region	Habitat	Potential to Occur within Action Area
BIRDS				
California Condor (*Gymnogyps californianus*)	Endangered	In northern Arizona, condors are located primarily near the Vermilion cliffs, Grand Canyon and Coconnino County.[3]	Large areas of remote country for foraging, roosting, and nesting. Roost on large trees or snags, or on isolated rocky outcrops and cliffs. Nests are located in shallow caves and rock crevices on cliffs where there is minimal disturbance. Foraging habitat includes open grasslands and oak savanna foothills that support populations of large mammals such as deer and cattle.[1]	No potential. Action area does not provide suitable habitat for species to occur.
Yellow-Billed Cuckoo (*Coccyzus americanus*)	Threatened	Possible rare summer/breeding occurrences.[2]	In the southwestern U.S., associated with riparian woodlands dominated by cottonwood or willow trees. In New Mexico, native or exotic species may be used.[2]	No potential. Action area does not provide suitable habitat for species to occur.
FISHES				
Roundtail chub (*Gila robusta*)	Proposed Threatened	San Juan and Mancos Rivers. Rarely encountered in recent surveys; some found from Shiprock to near Lake Powell with most between Shiprock and Aneth. [2,3]	Rocky runs, rapids, and pools of creeks and small to large rivers; also large reservoirs in the upper Colorado River system. [3,4]	No potential. Action area does not provide suitable habitat for species to occur.
PLANTS				
Fickeisen Plains cactus (*Pediocactus peeblesianus fickeiseniae*)	Endangered	Occurs in northern Arizona, specifically in Coconino and Mohave Counties.[5]	It grows in gravelly-limestone soils in Desert Shrub communities in the elevation range of 1,310 to 1,660 m.[5]	No potential. Action area does not provide suitable habitat for species to occur.[5]
MAMMALS				

Table 1: USFWS IPaC Official Species List for the Boyd Tisi No. 2 Western Project

Species	Status	Occurrence Within Region	Habitat	Potential to Occur within Action Area
Black-Footed ferret (*Mustela nigripes*)	Experimental Population, Non-Essential	Reintroduced into Coconico County.[1]	Open habitat, including grasslands, steppe, and shrub steppe. Closely associated with prairie dog colonies. At least 40 hectares of prairie dog colony required to support one ferret.[2]	No potential. Action area does not provide suitable habitat for species to occur. Action area does not provide prairie dog colonies of sufficient size
REPTILES				
Northern Mexican gartersnake (*Thamnophis eques megalops*)	Threatened	Most of AZ; In SE NM including Carton, Grant and Hildago County [2]	Considered a riparian obligate except during dispersal behavior. Occurs chiefly in the following general habitat types: (1) Source-area wetlands [e.g., cienegas (mid-elevation wetlands with highly organic, reducing (basic or alkaline) soils), stock tanks (small earthen impoundment, etc.]; (2) large river riparian woodlands and forest; and (3) streamside gallery forests (as defined by well-developed broadleaf deciduous riparian forests with limited, if any, herbaceous ground cover or dense grass). Occurs at elevations from 130 to 8,497 (ft).	No potential. Action area does not provide suitable habitat for species to occur.

[1]USFWS; [2]NatureServe Explorer; [3]Navajo Endangered Species List, Species Accounts 2008, [4] IUCN Red List, [5]Redente 2016

4.2.2. ESA-Listed Species Eliminated From Further Consideration

Table 1 includes six (6) ESA-listed species that have the potential to occur in the project area based on the USFWS IPaC Official Species List. All of the species in Table 1 have been eliminated from further discussion in this report. There would be no direct, indirect or cumulative impacts to the species in Table 1.

4.3. NESL Species Analysis and Results

4.3.1. Navajo Endangered Species List (NESL) and Species of Concern

Table 2.a lists species of concern with potential to occur on the 7.5-minute quadrangle(s) containing the project boundaries. According to the NESL information letter received from the NFWD found in Appendix D, there is no record of species of concern occurring on or near the project site. Biologists evaluated the potential for species of concern listed in the table below to occur within the project area.

Additionally, the NESL information letter requested that the potential for black-footed ferret (*Mustela nigripes*) be evaluated if prairie dog towns of sufficient size (per NFWD guidelines) occur in the project

area, and that potential for Parish's alkali grass (*Puccinellia parishii*) be evaluated if wetland conditions exist that contain white alkaline crusts. Species listed by the USFWS in Table 1 are not reiterated here.

Table 2.a: Navajo Endangered Species List (NESL) and Species of Concern

Species	Status	Habitat Associations	Potential to Occur in Project or Action Area
ANIMALS			
Wupatke Pocket Mouse (*Perognathus amplus cineris*)	NESL G4	Range of a narrow swath of western Navajo Nation from northern Echo Cliffs south to Wupatki National Monument near Flagstaff, AZ. Potential range on Navajo Nation likely extends from the Colorado River (Marble Canyon) east to Kaibito Plateau, south through Cameron to Leupp area.[3] Found in various types of desert scrub habitats (greasewood, rabbitbrush, creosote bush, cactus, mesquite, palo verde, etc.); and along scattered scrub oak in some areas. Sleeps and rears young in underground burrows. Sign includes small burrow openings with piles of sand, usually under a plant. Elevation ranges from 3,900 to 5,420 feet. [1,3]	Action area provides suitable habitat for species to occur; PPA is near eastern extent of range.
Northern Leopard Frog (*Lithobates pipiens*)	NESL G2	Springs, slow streams, marshes, bogs, ponds, canals, flood plains, reservoirs, and lakes; usually permanent water with rooted aquatic vegetation. In summer, commonly inhabits wet meadows and fields. Takes cover underwater, in damp niches, or in caves when inactive. Over winters usually underwater. Eggs are laid and larvae develop in shallow, still, permanent water (typically), generally in areas well exposed to sunlight.[5]	No potential. Action area does not provide suitable habitat for species to occur.
Southwestern Willow Flycatcher (*Empidonax traillii extimus*)	NESL G2 USFWS-E	Breeds in dense riparian habitat. [3,4]	No potential. Action area does not provide suitable habitat for species to occur.
Golden eagle (*Aquila chrysaetos*)	NESL G3	In the west, mostly open habitats in mountainous, canyon terrain. Nests primarily on cliffs.	Action area provides potential foraging habitat for species to occur.
Ferruginous hawk (*Buteo regalis*)	NESL G3	Breed in open country, usually prairies, plains and badlands; semi- desert grass-shrub, sagebrush-grass & piñon-juniper plant associations.	Action area provides potential foraging habitat for species to occur.
American peregrine falcon (*Falco peregrinus*)	NESL G4 NM-T	Nest in ledges or potholes on cliffs in wooded/forested habitats; Forage over riparian woodlands, coniferous & deciduous forests, shrublands, prairies.	No potential. Action area does not provide suitable habitat for species to occur.
PLANTS			
Round Dunebroom (*Errazurizia rotundata*)	NESL G3	Outcrop areas ranging from sandy and gravelly soils to alluvial cinders in sandstone breaks. Populations have been recorded for this species at elevations between 1,400 to 1580 m. [1,3,5]	Action area provides appropriate habitat for species to occur. No individuals found during Redente plant survey.[5]

Species	Status	Habitat Associations	Potential to Occur in Project or Action Area
Beath Milk-vetch (*Astragalus beathii*)	NESL G4	Sandy flats, red clay knolls and gullied washes especially on selenium-bearing soils at elevations between 1,220 and 1,460 m. [1,3,5]	Action area provides appropriate habitat for species to occur. No individuals found during Redente plant survey.[5]
Peebles' Blue-star (*Amsonia peeblesii*)	NESL G4	Plains grasslands and in Great Basin Desert Shrub communities on soils that are alkaline and coarse textured. It occurs at elevation ranges between 1,220 and 1,715 m. [1,3,5]	Action area provides appropriate habitat for species to occur. No individuals found during Redente plant survey.[5]

Species are listed by the NESL as; Group 2: Endangered (survival or recruitment in jeopardy); Group 3: Endangered (survival or recruitment in jeopardy in foreseeable future); and Group 4: Species of Consideration. NESL Species with New Mexico State Endangered or Threatened status are labeled as NM-T or NM-E.

Sources: [1]New Mexico Natural Heritage Program 2010, [2]NatureServe Explorer; [3]Navajo Endangered Species List, Species Accounts 2008, [4] IUCN Red List, [5]Redente 2016, [6] Hammerson et al 2004.

4.3.2. NESL Species Eliminated From Further Consideration

Table 2.a includes nine (9) NESL and Navajo Species of Concern that have the potential to occur in the project area based on the general geographical association. The following species have been eliminated from further discussion in this report: Southwestern Willow Flycatcher (*Empidonax traillii extimus*), American peregrine falcon (*Falco peregrinus*), Round Dunebroom (*Errazurizia rotundata*), Beath Milk-vetch (*Astragalus beathii*), Fickeisen Plains cactus (*Pediocactus peeblesianus fickeiseniae*), and Peebles' Blue-star (*Amsonia peeblesii*). None of these species were observed during surveys of the proposed project area or immediate surroundings. Critical habitats of these species do not exist within or adjacent to the proposed project area. There would be no direct, indirect or cumulative impacts to these species.

4.3.3. NESL Species Warranting Further Analysis

Table 2.b lists NESL and Navajo Species of Concern with potential to occur within the proposed project area based on habitat suitability or actual record of observation.

Table 2.b: NESL and Navajo Species of Concern Warranting Further Analysis

Species	Status	Habitat Associations	Potential to Occur in Project or Action Area
ANIMALS			
Golden eagle (*Aquila chrysaetos*)	NESL G3	In the west, mostly open habitats in mountainous, canyon terrain. Nests primarily on cliffs.[1,3]	Action area provides potential foraging habitat for species to occur.
Ferruginous hawk (*Buteo regalis*)	NESL G3	Breed in open country, usually prairies, plains and badlands; semi- desert grass-shrub, sagebrush-grass & piñon-juniper plant associations. [1,3]	Action area provides potential foraging habitat for species to occur.
Wupatke Pocket Mouse (*Perognathus amplus cineris*)	NESL G4	Range of a narrow swath of western Navajo Nation from northern Echo Cliffs south to Wupatki National Monument near Flagstaff, AZ. Potential range on Navajo Nation likely extends from the Colorado River (Marble Canyon) east to Kaibito Plateau, south through Cameron to Leupp area.[3] Found in various types of desert scrub habitats (greasewood, rabbitbrush, creosote	Action area provides suitable habitat for species to occur; PPA is near eastern extent of range.

Species	Status	Habitat Associations	Potential to Occur in Project or Action Area
		bush, cactus, mesquite, palo verde, etc.); and along scattered scrub oak in some areas. Sleeps and rears young in underground burrows. Sign includes small burrow openings with piles of sand, usually under a plant. Elevation ranges from 3,900 to 5,420 feet. [1,3]	

Species are listed by the NESL as; Group 2: Endangered (survival or recruitment in jeopardy); Group 3: Endangered (survival or recruitment in jeopardy in foreseeable future); and Group 4: Species of Consideration. NESL Species with New Mexico State Endangered or Threatened status are labeled as NM-T or NM-E.

Sources: Sources: [1]New Mexico Natural Heritage Program 2010, [2]NatureServe Explorer; [3]Navajo Endangered Species List, Species Accounts 2008, [4] IUCN Red List, [5]Redente 2016, [6] Hammerson et al 2004.

4.4. Migratory Bird Species

The Migratory Bird Treaty Act (MBTA) implements various treaties and conventions between the U.S. and Canada, Japan, Mexico and the former Soviet Union for the protection of migratory birds. Under the Act, taking, killing or possessing migratory birds is unlawful.

The bald eagle (*Haliaeetus leucocephalus*) was delisted under the ESA on August 9, 2007. Both the bald eagle and golden eagle (*Aquila chrysaetos*) are still protected under the MBTA and Bald and Golden Eagle Protection Act (BGEPA). The BGEPA affords both eagles protection in addition to that provided by the MBTA, in particular, by making it unlawful to "disturb" eagles.

In preparation for conducting the migratory bird survey, information from the New Mexico Partners In Flight website (http://www.hawksaloft.org/pif.shtml), the New Mexico PIF highest priority list of species of concern by vegetation type, the USFWS's Division of Migratory Bird Management website (http://www.fws.gov/migratorybirds/), and the 2002 Birds of Conservation Concern Report for the Southern Rockies/Colorado Plateau Bird Conservation Region (BCR) No. 16, were used to develop a list of high priority migratory bird species with potential to occur in the area of the proposed action. Species addressed previously will not be reiterated here.

Table 3: Priority Birds of Conservation Concern with Potential to Occur in the Project Area

Species Name	Habitat Associations	Potential to Occur in the Project Area
Black-throated sparrow (*Amphispiza bilineata*)	Xeric habitats dominated by open shrubs with areas of bare ground.	Suitable habitat is present within the action area for species to occur.
Brewer's sparrow (*Spizella breweri*)	Closely associated with sagebrush, preferring dense stands broken up with grassy areas.	No suitable habitat is present within the action area for species to occur.
Gray vireo (*Vireo vicinior*)	Open stands of piñon pine and Utah juniper (5,800 – 7,200 ft) with a shrub component and mostly bare ground; antelope bitterbrush, mountain mahogany, Utah serviceberry and big sagebrush often present. Broad, flat or gently sloped canyons, in areas with rock outcroppings, or near ridge-tops.	No suitable habitat is present within the action area for species to occur.
Loggerhead shrike (*Lanius ludovicianus*)	Open country interspersed with improved pastures, grasslands, and hayfields. Nests in sagebrush areas, desert scrub, and woodland edges.	Suitable habitat is present within the action area for species to occur.
Mountain bluebird (*Sialia*	Open piñon-juniper woodlands, mountain	No suitable habitat is present within

currucoides)	meadows, and sagebrush shrublands; requires larger trees and snags for cavity nesting.	the action area for species to occur.
Mourning dove (*Zenaida macroura*)	Open country, scattered trees, and woodland edges. Feeds on ground in grasslands and agricultural fields. Roost in woodlands in the winter. Nests in trees or on ground.	No suitable habitat is present within the action area for species to occur.
Sage sparrow (*Amphispiza belli*)	Large and contiguous areas of tall and dense sagebrush. Negatively associated with seral mosaics and patchy shrublands and abundance of greasewood.	No suitable habitat is present within the action area for species to occur.
Sage thrasher (*Oreoscoptes montanus*)	Shrub-steppe dominated by big sagebrush.	Marginal habitat is present within the action area for species to occur. Lack of significant sagebrush shrubland likely a limiting factor.
Scaled quail (*Callipepla squamata*)	Brushy arroyos, cactus flats, sagebrush or mesquite plains, desert grasslands, Plains grasslands, and agricultural areas. Good breeding habitat has a diverse grass composition, with varied forbs and scattered shrubs.	No suitable habitat present within the action area for species to occur. Lack of diverse grass composition with varied forbs likely a limiting factor.
Swainson's hawk (*Buteo swainsoni*)	A mixture of grassland, cropland, and shrub vegetation; nests on utility poles and in isolated trees in rangeland. Nest densities higher in agricultural areas.	No suitable habitat is present within the action area for species to occur.
Vesper sparrow (*Pooecetes gramineus*)	Dry montane meadows, grasslands, prairie, and sagebrush steppe with grass component; nests on ground at base of grass clumps.	No suitable habitat present within the action area for species to occur. Lack of significant grassland/prairie component a limiting factor.
Bald eagle (*Haliaeetus leucocephalus*)	Near lakes, rivers and cottonwood galleries. Nests near surface water in large trees. May forage terrestrially in winter	No suitable habitat present within the action area for species to occur.
Bendire's thrasher (*Toxostoma bendirei*)	Typically inhabits sparse desert shrubland and open woodland with scattered shrubs; breeds in AZ and scattered locations in central & western portions of NM; most common in southwest NM.	Marginal habitat is present within the action area for species to occur.
Piñon jay (*Gymnorhinus cyanocephalus*)	Foothills throughout CO and NM wherever large blocks of piñon-juniper woodland habitat occurs.	No suitable habitat present within the action area for species to occur.
Prairie falcon (*Falco mexicanus*)	Arid, open country, grasslands or desert scrub, rangeland; nests on cliff ledges, trees, power structures.	Suitable foraging habitat is present within the action area for species to occur.
Mountain plover *(Charadrius montanus)*	Typically nests in flat (<2% slope) to slightly rolling expanses of grassland, semi-desert, or badland, in an area with short, sparse vegetation, large bare areas (often >1/3 of total area), and that is typically disturbed (e.g. grazed); may also nest in plowed or fallow cultivation fields. Nest is a scrape in dirt often next to a grass clump or old cow manure pile. Migration habitat is similar to breeding habitat.	No suitable habitat present within the action area for species to occur.

Western burrowing owl (*Athene cunicularia hypugaea*)	Open grasslands and sometimes other open areas (such as vacant lots). Nests in abandoned burrows, such as those dug by prairie dogs.[2]	No suitable habitat present within the action area for species to occur. Lack of burrows a limiting factor.

5. EFFECTS ANALYSIS

Effects or impacts can be either long term (permanent or residual) or short term (incidental or temporary). Short-term impacts affect the environment for only a limited period and then the environment reverts rapidly back to pre-action conditions. Long-term impacts are substantial and permanent alterations to the pre-existing environmental condition. Direct effects are those effects that are caused by the action and occur in the same time and place as the action. Indirect effects are those effects that are caused by or will result from the proposed action and are later in time but still reasonably certain to occur (USFWS 1998).

5.1. Direct and Indirect Effects

The PPA includes the claim boundary and a 100-foot perimeter buffer zone for a total of approximately 13.3 acres. The project will also include a walkover survey for gamma radiation across a small area known as the "background area" (see Appendix A for map). A few soil samples approximately 3 inches in diameter and up to 6 inches deep will be collected by hand in these areas. The proposed action would result in a short term increase in human activity within the PPA at varying degrees depending on the project phase:

- Phase I: Spring of 2016 activity would entail pedestrian biological surveys and land surveying. Fall of 2016 work would entail pedestrian activity including gamma surveys, mapping, well sampling, and surface soil sampling. For this phase, there will be a maximum of 5 people onsite for no more than 5 to 7 days. Surface disturbance would be minimal and noise would be light.

- Phase II: Beginning in 2017, equipment including an excavator or small mobile drilling unit may be used to collect one or more soil samples. Up to 8 people may be onsite all day for a period of one week. Equipment travel would be confined to a temporary travel corridor approximately 20 feet in width. Within the travel corridor, vegetation and surface soil would sustain some disturbance but would not be bladed or bulldozed. During Phase II, noise may be moderate for a short duration, and surface disturbance will be light to moderate but confined to a minimal footprint within the study area. No permanent structures will be left on site.

Best Management Practices (BMPs) incorporated into project design will reduce potential impacts including: confining equipment travel to PPA boundary, minimizing travel corridors as much as practicable, limiting truck and equipment travel within the PPA when surfaces are wet and soil may become deeply rutted, and using previously disturbed areas for travel when possible.

5.1.1. Golden eagle, Ferruginous hawk

Due to the mobility of adult raptors and the lack of appropriate nesting sites in the vicinity of the proposed project area, it is unlikely that the proposed project would result in 1) injury to a raptor, 2) a decrease in its productivity, by substantially interfering with normal breeding, feeding, or sheltering behavior, or 3) nest abandonment, by substantially interfering with normal breeding, feeding, or sheltering behavior. Short term audial and visual disturbances associated with the Phase II activity could cause minor indirect habitat loss by temporarily deterring raptors from using available habitat adjacent to the proposed project area.

5.1.2. Wupatke Pocket Mouse

The PPA is near the eastern extent of the potential range for this species, and the action area does provide suitable habitat for this species to occur; however, surveyors did not observe any burrows

characteristic of this species during the April 2016 survey of the PPA. Short term human presence in the area may temporarily disrupt any adults that may be present from foraging behavior, but burrows or young would not be directly disturbed. Due to the minimal surface area potentially disturbed during project phases, any effects to this species or its habitat are anticipated to be minimal.

5.1.3. Migratory Birds

The PPA encompasses approximately 13.3 acres of potential migratory bird habitat in the form of Great Basin Desert scrub. No trees would be removed as a result of the proposed project.

Phase I:
Noise and surface disturbance will be low during pedestrian survey activity. Adult migratory birds would not be directly impacted by Phase I because of their mobility and ability to avoid areas of human activity. Minor human presence during project activities within the breeding season may indirectly disturb or displace adults from nests and foraging habitats for a short period of time. Direct and indirect effects are expected to be short term and negligible.

Phase II:
Adult migratory birds would not be directly harmed by the activities because of their mobility and ability to avoid areas of human activity. During Phase II, noise may be moderate but for a short duration, and surface disturbance will be light to moderate but confined to a minimal footprint within the study area. No permanent structures will be left on site. Direct impacts are more likely if surface disturbing activities occur during the breeding season (April 1 through August 15); however, surface disturbance will be confined to a minimal footprint (likely less than one acre) within the study area. The increased human presence during project activities within the breeding season may indirectly disturb or displace adults from nests and foraging habitats for a short period of time.

5.2. Cumulative Effects

Cumulative impacts of an action include the total effects on a resource or ecosystem. Cumulative effects in the context of the Endangered Species Act pertain to non-Federal actions, and are reasonably certain to occur in the action area (USFWS 1998).

5.2.1. Golden eagle, Ferruginous hawk

Additional existing surface disturbances within the action area include unimproved access roads to the residences nearby, all-terrain vehicle use and active wildlife and livestock grazing. These foreseeable actions would cumulatively impact raptors through habitat loss. Human activity may also increase available prey base if the activity leads to an increase in rodent population numbers. The intensity of indirect effects would be dependent upon the species, its life history, time of year and/or day and the type and level of human and vehicular activity is occurring.

5.2.2. Wupatke Pocket Mouse

As stated above in Section 5.2.1, foreseeable human activity in the area would contribute to cumulative effects; however if project activities are confined to the PPA, no direct or indirect impacts, and therefore no cumulative impacts, are expected from the proposed action.

5.2.3. Migratory Birds

With the implementation of BMPs discussed in Section 5.1, the cumulative impact of the proposed action on migratory birds would be low based on the minimal surface disturbance involved and the availability of adjacent similar habitats.

6. CONCLUSIONS

U.S. Fish and Wildlife Service Listed Species (USFWS)

ACI conducted informal consultation with the USFWS and received an Official Species List for the proposed project area. Qualified ACI biologists evaluated habitat suitability within and surrounding the PPA for these species and concluded the potential does not exist for USFWS-listed species to occur within the proposed project area. No further consultation with the USFWS is required.

Migratory Birds

The proposed action phases would result in short term activity within approximately 13.3 acres of potential migratory bird habitat in the form of Great Basin Desert scrub. During Phase I, noise and surface disturbance will be low during pedestrian survey activity. Direct and indirect effects are expected to be short term and negligible. For Phase II, the total surface disturbance is unknown at this point; however equipment movement would be confined to only a few temporary travel corridors. Within the travel corridors, vegetation and surface soil would sustain some disturbance but would not be bladed or bulldozed. Possible direct impacts would be short term and are more likely if surface disturbing activities occur during the breeding season (April 1 through August 15). Effects to potential habitat for migratory birds is anticipated to be minor and short term due to the limited degree of vegetation and soil disruption and the abundance of adjacent habitat for these species.

Wetlands

Under Executive Orders 11988 and 11990, Federal agencies are required to minimize the destruction, loss, or degradation of wetlands and floodplains, and preserve and enhance their natural and beneficial values. These habitats should be conserved through avoidance, or mitigated to ensure that there would be no net loss of wetlands function and value. No impacts to wetlands are anticipated. The proposed project activities would contribute to a negligible increase in sedimentation down gradient of the project area. ESA-listed fish species are not known to occur in the Little Colorado River near the PPA, nor is the area near the PPA considered critical habitat of any ESA-listed species.

Navajo Endangered Species List (NESL) and Species of Concern

Three (3) NESL and Navajo species of concern have potential to occur within the PPA based on habitat suitability or actual record of observation. Based on site surveys, ACI determined the PPA contains potential foraging habitat for the following: golden eagle, ferruginous hawk, and Wupatke pocket mouse. Due to the mobility of adults and the lack of appropriate nesting or breeding sites in the vicinity of the proposed project area, it is unlikely that the proposed project would result in detriment to these species.

7. RECOMMENDATIONS FOR AVOIDANCE

ACI recommends that the proponent implement standard Best Management Practices (BMPs) designed to protect sensitive wildlife species during project activity including: confining equipment travel to PPA boundary, minimizing travel corridors as much as practicable, limiting truck and equipment travel within the PPA when surfaces are wet and soil may become deeply rutted, and using previously disturbed areas for travel when possible.

8. SUPPORTING INFORMATION

8.1. Consultation and Coordination

John Nystedt, Fish and Wildlife Biologist/AESO Tribal Coordinator
USFWS AZ Ecological Services Office - Flagstaff Suboffice
Southwest Forest Science Complex, 2500 S Pine Knoll Dr, Rm 232
Flagstaff, AZ 86001

Pam Kyselka, Project Reviewer and
Chad Smith, Zoologist
Navajo Nation Department of Fish and Wildlife
Natural Heritage Program
PO Box 1480
Window Rock, AZ 86515

8.2. Report Preparers and Certification

Adkins Consulting, Inc.
180 E. 12th Street, Unit 5
Durango, Colorado 81301
Lori Gregory, Biologist; Sarah McCloskey, Field Biologist; Arnold Clifford, Lead Field Biologist

It is believed by Adkins Consulting that the proposed action would not violate any of the provisions of the Endangered Species Act of 1973, as amended. Conclusions are based on actual field examination and are correct to the best of my knowledge.



1 August 2016

_____ _____
Lori Gregory Date
Wildlife Biologist
Adkins Consulting
505.787.4088

8.3. References

BirdLife International. 2015. *Gymnogyps californianus. The IUCN Red List of Threatened Species 2015: e.T22697636A79322139.* http://dx.doi.org/10.2305/IUCN.UK.2015-4.RLTS.T22697636A79322139.en. Downloaded on 12 June 2016

Code of Federal Regulations (CFR). Interagency Cooperation - 50 CFR §402 (June 3, 1986). U.S. Government Publishing Office Electronic Code of Federal Regulations. 732 North Capitol Street, NW, Washington, DC. Retrieved from: https://www.gpo.gov/fdsys/search/home.action.

Hammerson, Geoffrey, Frank Solís, Roberto Ibáñez, César Jaramillo, Querube Fuenmayor. 2004. *Lithobates pipiens*. The IUCN Red List of Threatened Species 2004: e.T58695A11814172. http://dx.doi.org/10.2305/IUCN.UK.2004.RLTS.T58695A11814172.en. Downloaded on 10 June 2016.

Heil, Kenneth D. 2000. *Four Corners Invasive and Poisonous Plant Field Guide.* Bureau of Land Management (BLM), Farmington District, and San Juan College, Farmington, New Mexico.

NatureServe. 2015. NatureServe Explorer: An online encyclopedia of life [web application]. Version 7.1. NatureServe, Arlington, Virginia. Available http://explorer.natureserve.org. (Accessed: June 9, 2016).

Navajo Nation Division of Natural Resources, Department of Fish and Wildlife. 2008a. *Navajo Endangered Species List (NESL)*. Resources Committee Resolution No. RCS-41-08. Window Rock, AZ.

Navajo Nation Division of Natural Resources, Department of Fish and Wildlife. 2008b. *Navajo Endangered Species List (NESL) Species Accounts.* Retrieved from: http://www.nndfw.org/nnhp/species_acct.pdf

New Mexico Department of Game and Fish. *BISON-M (Biota Information System of New Mexico).* Available at: http://www.bison-m.org.

New Mexico Natural Heritage Program. 2006. The website of Natural Heritage New Mexico: An online resource. Version 2.0. Albuquerque, New Mexico, USA: University of New Mexico. http://nmnhp.unm.edu.

New Mexico Rare Plant Technical Council. 1999. *New Mexico Rare Plants*. Albuquerque, NM: New Mexico Rare Plants Home Page. http://nmrareplants.unm.edu.

Prall, Dexter . 2015. Navajo Endangered Species List (NESL) Information letter to Eileen Dornfest, MWH Global (File# 15mwh101). Navajo Nation Department of Fish and Wildlife, Natural Heritage Program, Window Rock, AZ.

Redente. Edward F. 2016. Plant Survey Report for Species of Concern at Boyd Tisi#2 Project Site.

U.S. Department of Agriculture, Natural Resources Conservation Service (NRCS). 2006. Web Soil Survey. Version 1.1. NRCS. http://websoilsurvey.nrcs.usda.gov/app.

U.S. Fish and Wildlife Service (USFWS), Endangered Species Program. Information, Protection, and Conservation (iPaC). http://ecos.fws.gov/ipac/. Official Species List (02ENNM00-2016-SLI-0448) dated April 8, 2016

U.S. Fish and Wildlife Service (USFWS) 1998. Final Endangered Species Act (ESA) Section 7 Consultation Handbook, March 1998. https://www.fws.gov/endangered/esa-library/pdf/esa_section7_handbook.pdf

U.S. Fish and Wildlife Service. 2008. *Wetlands Online Mapper.* National Wetlands Inventory (NWI). http://wetlandsfws.er.usgs.gov/wtlnds/launch.html.

APPENDIX A. MAPS





Survey Area

Boyd Tisi #2

Section 30 Township 29N, Range 10E
Cocorino County, Arizona

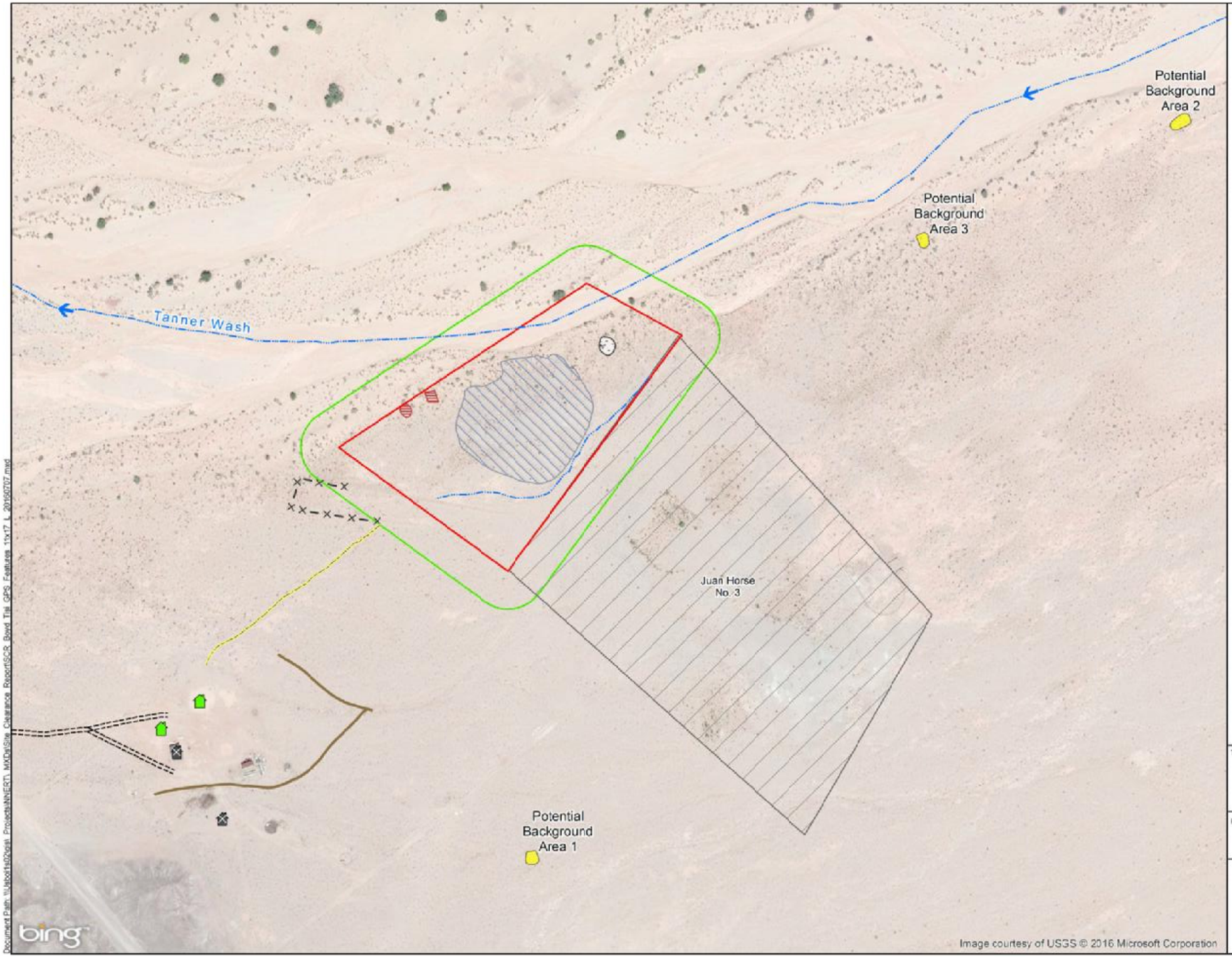

LEGEND

- Habitable Building
- Uninhabitable Building
- Flow Direction
- Berm
- Drainage
- Fence
- Potential Haul Road
- Road
- Potential Background Area
- Debris
- Reclaimed Area
- Waste Pile
- Claim Boundary
- Other Claim Boundary
- 100-Foot Claim Buffer

REFERENCES:

Base Image: BING Imagery

Coordinate System: NAD 1983 UTM Zone 12N
Units: Meter

N W E S

0 250 500
Feet

TITLE:

Boyd Tisi No. 2 Western
Field Mapping Data

PROJECT:

Navajo Nation Environmental Response Trust
Removal Site Evaluation

NAVAJO NATION
Abandoned Uranium Mines Environmental Response Trust

MWH.

DOCUMENT NAME:

Site Clearance Data Report

AUTHOR: CBB

REVIEWER: EDZ

FIGURE: 4

Document Path: \\Usbol1s02\gis_Projects\NNERT_MXDs\Site_Clearance_Report\SCR_Boyd_Tisi_GPS_Features_11x17_L_20160707.mxd

APPENDIX B. PHOTOGRAPHS



APPENDIX C. REDENTE PLANT SURVEY REPORT

Navajo Nation AUM Environmental Response Trust



Plant Survey Report for Species of Concern At Boyd Tisi No. 2 Western Project Site Coconino County, Arizona August 2016

Prepared by:
Redente Ecological Consultants
1322 Alene Circle
Fort Collins, CO 80525

Table of Contents

INTRODUCTION 1
Purpose of Report 1
Site Location 1
Environmental Setting 1
Climate 1
Soils 1
Plant Community Type 2
Land Use 2
REGULATORY SETTING 2
METHODS 3
Study Area 3
Database Queries and Literature Review 3
Rare Plant Survey Protocols 3
2016 Field Survey 4
RESULTS 4
REFERENCES 6
LIST OF PREPARERS 7

INTRODUCTION

Purpose of Report

A biological survey was conducted at the Boyd Tisi No. 2 Western site as part of the Navajo Nation AUM Environmental Response Trust Project. The purpose of the survey is to determine if plant species of concern are present within the claim boundary and extending 100 feet around the site. Biological clearance is required at each site prior to any site investigation to determine if the project may affect potential species of concern or potential federal threatened and endangered (T&Es) species and/or critical habitat.

Site Location

Boyd Tisi No. 2 Western is located in central Coconino County Arizona approximately 80 km (50 miles) north of Flagstaff, Arizona at an elevation of approximately 1,270 m (4,167 ft). Global Positioning System coordinates are 35º 51' 47" N by 111º 22' 08"W (North American Datum of 1983). The site is located on Tribal Trust Land (TTL).

Environmental Setting

Climate

The climate of the Boyd Tisi No. 2 Western site is classified as semi-arid, with an average annual precipitation in Coconino County of 286 mm (11.3 in) with the greatest precipitation months occurring in July and August (USDA 1983). Average annual temperature is 12.2º C (54º F), which is much lower than the Arizona average annual temperature of 18.8º C (65.8º F).

Soils

The U.S. Department of Agriculture (USDA) Soil Survey for Coconino County was published in 1983 and cover portions of central Coconino County and extends to approximately 0.5 km (0.3 miles) south of the Boyd Tisi No. 2 Western site. Based on the topographic features of the site, the general mapping unit for the area may be Epikom-Tours-Purgatory (USDA 1983). This map unit is mainly plateaus and mesas with slopes that range from 0 to 15%. The soils in this mapping unit are shallow and well drained and

formed in alluvial and eolian deposits derived dominantly from sandstone and sandy shale.

Plant Community Type

The vegetation on the Boyd Tisi No. 2 Western site is part of the Grama-galleta steppe according to Bailey (1980). The most common species on the site include black grama (*Bouteloua eriopoda*), blue grama (*Bouteloua gracilis*), alkali sacaton (*Sporobolus airoides*), galleta (*Pleuraphis jamesii*), fourwing saltbush (*Atriplex canescens*), rubber rabbitbrush (*Ericameria nauseosa*), and Mormon tea (*Ephedra viridis*).

Land Use

The land type on the Body Tisi #2 site is rangeland and the principal land use is domestic grazing. The area is heavily grazed and the site is in fair to poor condition.

REGULATORY SETTING

The survey for vegetation species-of-concern was conducted according to the Navajo Natural Heritage Program (NNHP) guidelines and the Endangered Species Act (ESA), including the procedures set forth in the *Biological Resource Land Use Clearance Policies and Procedures* (RCP), RCS-44-08 (NNDFW 2008), the Species Accounts document (NNHP 2008), and the USFWS survey protocols and recommendations. Data requests for species of concern were submitted to the NNHP and for federal T&E species to the USFWS. NNHP responded to the request for species of concern with a letter to MWH dated 19 November 2015. The letter provided a list of species of concern known to occur within the proximity of the project area. The list of species included their status as either NESL (Navajo Endangered Species List), Federally Endangered, Federally Threatened, or Federal Candidate. Species were further classified as G2, G3 or G4. G2 includes endangered species or subspecies whose prospects of survival or recruitment are in jeopardy. G3 includes endangered species or subspecies whose prospects of survival or recruitment are likely to be in jeopardy in the foreseeable future. G4 are “candidates” and includes those species or subspecies which may be endangered but for which we lack sufficient information to support being listed.

The Navajo Natural Heritage Program identified three endangered plant species that may occur in the project area. These species included Beath milkvetch (*Astragalus beathii*), Round dune-broom (*Errazurisia rotundata*), and Peebles blue star (*Amsonia peeblesii*). The USFWS listed Fickeisen plains cactus (*Pediocactus peeblesianus fickeiseniac*) as an additional threatened species that may occur in the area.

METHODS

Study Area

The area evaluated for plant species of concern was defined by the claim boundary, with an additional 100 foot buffer around all sides.

Database Queries and Literature Review

Prior to initiating field surveys, a target list of all potentially occurring species of concern identified by NNHP and the USFWS was compiled. Ecologic and taxonomic information was reviewed for each species prior to initiating field work to better understand ecological characteristics of the species, habitat requirements and key taxonomic indicators for proper identification (ANPS 2000).

Rare Plant Survey Protocols

The plant survey followed currently accepted resource agency protocols and guidelines, for conducting and reporting botanical inventories for special status plant species (USFWS 1996). According to these protocols, a rare plant survey was conducted by botanists with considerable experience with the local flora. All species observed during the surveys were identified to the degree necessary to correctly identify the species and determine if the plant had special status. The survey was conducted in the spring of 2016 during the appropriate season to observe the phenological characteristics of the special status plant species that were necessary for identification.

The botanical survey team was assisted during the survey by GIS trained staff from MWH with training specifically in the use of the Trimble GeoExplorer 6000 Series. The GPS

operator was also instructed in sight identification of species of concern to help delineate points or polygons and other data collection and data management tasks. GPS units were preloaded for the plant team with background and data files that showed the aerial photographic base map, the site boundaries, and the study area, so team members could clearly identify their exact location in the field at all times.

2016 Field Survey

The project site was surveyed by a field botanist. The botanist walked meandering "transect" lines through each area and looked for suitable habitat for these species, such as clay knolls, gullied washes, calcareous outcrops, sandstone breaks, and volcanic cinders. The most emphasis was placed in areas with suitable habitat for the species of concern. If a species of concern was identified, the location would be recorded using the point or polygon feature in the GPS units. Further, the population size was planned to be obtained either by direct counts, estimations, or by sampling the population.

Field botanists documented every field visit on field forms, by area, and took photographs of field conditions and species of concern, if found on site. The botanist also recorded all plant communities and plant species observed during each field visit. Plant community types were also photographed in to document site conditions (Photos #1 and #2).

RESULTS

A total of 4 plant species of concern were identified as potentially occurring within the proximity of the project area. These species included *Astragalus beathii*, *Errazurisia rotundata*, *Amsonia peeblesii,* and *Pediocactus peeblesianus fickeiseniac*. *Astragalus beathii* is a native perennial legume that has a general distribution in Coconino County and inhabits sandy flats, red clay knolls and gullied washes especially on selenium-bearing soils at elevations between 1,220 and 1,460 m (4,003 and 4,790 ft). *Errazurisia rotundata* is a native low growing shrub that occurs in Coconino and Navajo Counties and inhabits outcrop areas ranging from sandy and gravelly soils to alluvial cinders in sandstone breaks. Populations have been recorded for this species at elevations between 1,400 to 1580 m (4,593 and 5,184 ft). *Amsonia peeblesii* is native perennial forb found in Coconino, Navajo and Apache Counties. It is found growing on plains grasslands and in

Great Basin Desert Shrub communities on soils that are alkaline and coarse textured. It occurs at elevation ranges between 1,220 and 1,715 m (4,003 and 5,627 ft). *Pediocactus peeblesianus fickeiseniac* is a small (2.5 to 6.0 cm tall) (1 to 2 in tall) pincushion cactus that occurs in northern Arizona, specifically in Coconino and Mohave Counties. It grows in gravelly-limestone soils in Desert Shrub communities in the elevation range of 1,310 to 1,660 m (4,298 and 5,446 ft).

The survey at Boyd Tisi No. 2 Western on May 3, 2016 did not identify any of the four species that have been listed as potential species of concern for this site. The habitat at Boyd Tisi No. 2 Western may be appropriate for the occurrence of *Astragalus beathii*, *Errazurisia rotundata*, and *Amsonia peeblesii,* but most likely not appropriate for *Pediocactus peeblesianus fickeiseniac*. *Astragalus beathii* is known to occur on soils with elevated selenium levels and it is not known if the soils at Boyd Tisi No. 2 Western meet this criteria. The elevation, soil conditions and plant community type at the site are all out of the habitat range for *Pediocactus peeblesianus fickeiseniac*.



Photo #1—Overview of general landscape and plant community at Boyd Tisi No. 2 Western.



Photo #2—Overview of general landscape and plant community at Boyd Tisi No. 2 Western.

REFERENCES

ANPS. 2000. Arizona Rare Plant Field Guide. U.S. Government Printing Office. Washington, D.C.

Bailey, Robert G. 1980. Ecoregions of the United States. USDA Forest Service. Miscellaneous Publication 1391. Washington, D.C.

Navajo Nation Department of Fish and Wildlife (NNDFW), 2008. Biological Resource Land Use Clearance Policies and Procedures, RCS-44-08. September 10.

Navajo Natural Heritage Program (NNHP), 2008. *Species Accounts*, Navajo Nation Endangered Species List, version 3.08.

USDA. 1983. Soil Survey for Coconino County Area Arizona Central Part. U.S. Department of Agriculture, Soil Conservation Service. Washington, D.C.

USFWS. 1996. Guidelines for Conducting and Reporting Botanical Inventories for Federally Listed, Proposed, and Candidate Plants. Sacramento Fish and Wildlife Office, Sacramento, California.

LIST OF PREPARERS

Redente, Edward F. Plant Ecologist. B.A., M.S. and Ph.D. Over 40 years of experience in plant ecology and plant survey studies throughout the semi-arid and arid western U.S. Author or Co-author of over 200 publications.

APPENDIX D. NESL LETTER

NNHP
Navajo Natural Heritage Program

PO Box 1480
Window Rock, AZ
86515

P 928.871.6472
F 928.871.7603

http://nnhp.ndfw.org

15mwh101

19-November-2015

Eileen Dornfest - Project Manager
MWH Americas
3665 John F Kennedy Parkway
Bldg 1, Suite 206
Ft. Collins, CO 80525

SUBJECT: Navajo Nation AUM Environmental Response Trust (ERT) Project - 16 Abandoned Uranium Mine (AUM) Sites

Eileen Dornfest,

NNHP has performed an analysis of your project in comparison to known biological resources of the Navajo Nation and has included the findings in this letter. The letter is composed of seven parts. The sections as they appear in the letter are:

1. **Known Species** – a list of all species within relative proximity to the project
2. **Potential Species** – a list of potential species based on project proximity to respective suitable habitat
3. **Quadrangles** – an exhaustive list of quads containing the project
4. **Project Summary** – a categorized list of biological resources within relative proximity to the project grouped by individual project site(s) or quads
5. **Conditional Criteria Notes** – additional details concerning various species, habitat, etc.
6. **Personnel Contacts** – a list of employee contacts
7. **Resources** – identifies sources for further information

Known Species lists “species of concern” known to occur within proximity to the project area. Planning for avoidance of these species is expected. If no species are displayed then based upon the records of the Navajo Nation Department of Fish and Wildlife (NNDFW) there are no “species of concern” within proximity to the project. Refer to the Navajo Endangered Species List (NESL) Species Accounts for recommended avoidance measures, biology, and distribution of NESL species on the Navajo Nation (http://nnhp.ndfw.org/sp_account.htm).

Potential Species lists species that are potentially within proximity to the project area and need to be evaluated for presence/absence. If no species are found within the Known or Potential Species lists, the project is not expected to affect any federally listed species, nor significantly impact any tribally listed species or other species of concern. Potential for species has been determined primarily on habitat characteristics and species range information. A thorough habitat analysis, and if necessary, species specific surveys, are required to determine the potential for each species.

Species of concern include protected, candidate, and other rare or otherwise sensitive species, including certain native species and species of economic or cultural significance. For legally protected species, the following tribal and federal statuses are indicated: NESL, federal Endangered Species Act (ESA), Migratory

Bird Treaty Act (MBTA), and Eagle Protection Act (EPA). No legal protection is afforded species with only ESA candidate, NESL group 4 status, and species listed on the Sensitive Species List. Please be aware of these species during surveys and inform the NNDFW of observations. Reported observations of these species and documenting them in project planning and management is important for conservation and may contribute to ensuring they will not be up listed in the future.

In any and all correspondence with NNDFW or NNHP concerning this project please cite the Data Request Code associated with this document. It can be found in this report on the top right corner of the every page. Additionally please cite this code in any biological evaluation documents returned to our office.

1. Known Species *(NESL=Navajo Endangered Species List, FE=Federally Endangered, FT=Federally Threatened, FC=Federal Candidate)*

Species

AMPE = Amsonia peeblesii / Peebles' Blue-star NESL G4
AQCH = Aquila chrysaetos / Golden Eagle NESL G3
CASP = Carex specuicola / Navajo Sedge NESL G3 FT
LIPI = Lithobates pipiens / Northern Leopard Frog NESL G2
PEAMCI = Perognathus amplus cineris / Wupatki Pocket Mouse NESL G4
PUPA = Puccinellia parishii / Parish's Alkali Grass NESL G4

**All or parts of this project currently are within areas protected by the Golden and Bald Eagle Nest Protection Regulations; consult with NNDFW zoologist or EA Reviewer for more information and recommendations.

2. Potential Species

Species

ALGO = Allium gooddingii / Gooding's Onion NESL G3
AMPE = Amsonia peeblesii / Peebles' Blue-star NESL G4
AQCH = Aquila chrysaetos / Golden Eagle NESL G3
ASBE = Astragalus beathii / Beath Milk-vetch NESL G4
ASNA = Astragalus naturitensis / Naturita Milk-vetch NESL G3
ASWE = Asclepias welshii / Welsh's Milkweed NESL G3 FT
ATCU = Athene cunicularia / Burrowing Owl NESL G4
BURE = Buteo regalis / Ferruginous Hawk NESL G3
CASP = Carex specuicola / Navajo Sedge NESL G3 FT
CHMO = Charadrius montanus / Mountain Plover NESL G4
CIME = Cinclus mexicanus / American Dipper NESL G3
CIRY = Cirsium rydbergii / Rydberg's Thistle NESL G4
CYUT = Cystopteris utahensis / Utah Bladder-fern NESL G4
EMTREX = Empidonax traillii extimus / Southwestern Willow Flycatcher NESL G2 FE
ERAC = Erigeron acomanus / Acoma Fleabane NESL G3
ERRH = Erigeron rhizomatus / Rhizome Fleabane/zuni Fleabane NESL G2 FT
ERRO = Errazurizia rotundata / Round Dunebroom NESL G3
ERSI = Erigeron sivinskii / Sivinski's Fleabane NESL G4
FAPE = Falco peregrinus / Peregrine Falcon NESL G4
GIRO = Gila robusta / Roundtail Chub NESL G2
LENA = Lesquerella navajoensis / Navajo Bladderpod NESL G3
LIPI = Lithobates pipiens / Northern Leopard Frog NESL G2
MUNI = Mustela nigripes / Black-footed Ferret NESL G2 FE

PEAMCI = Perognathus amplus cineris / Wupatki Pocket Mouse NESL G4
PLZO = Platanthera zothecina / Alcove Bog-orchid NESL G3
PRSP = Primula specuicola / Cave Primrose NESL G4
PTLU = Ptchocheilus lucius / Colorado Pikeminnow NESL G2
PUPA = Puccinellia parishii / Parish's Alkali Grass NESL G4
SAPAER = Salvia pachyphylla ssp eremopictus / Arizona Rose Sage NESL G4
STOCLU = Strix occidentalis lucida / Mexican Spotted Owl NESL G3 FT
VUMA = Vulpes macrotis / Kit Fox NESL G4
ZIVA = Zigadenus vaginatus / Alcove Death Camass NESL G3

3. Quadrangles (7.5 Minute)

Quadrangles

Cameron SE (35111-G3) / AZ
Dalton Pass (35108-F3) / NM
Del Muerto (36109-B4) / AZ
Dos Lomas (35107-C7) / NM
Gallup East (35108-E6) / NM
Garnet Ridge (36109-H7) / AZ, UT
Horse Mesa (36109-F1) / AZ, NM
Indian Wells (35110-D1) / AZ
Mexican Hat SE (37109-A7) / UT, AZ
Oljeto (37110-A3) / UT, AZ
Toh Atin Mesa East (36109-H3) / AZ, UT
Toh Atin Mesa West (36109-H4) / AZ, UT

4. Project Summary *(EO1 Mile/EO 3 Miles=elements occuring within 1 & 3 miles., MSO=mexican spotted owl PACs, POTS=potential species, RCP=Biological Areas)*

SITE	EO1MI	EO3MI	QUAD	MSO	POTS	AREAS
Alongo Mines	None	AQCH	Horse Mesa (36109-F1) / AZ, NM	None	LIPI, FAPE, EMTREX, CHMO, BURE, ATCU, AQCH, ZIVA, PUPA, PLZO, CIRY, CASP	Area 3
Barton 3	None	None	Toh Atin Mesa West (36109-H4) / AZ, UT	None	PTLU, GIRO, EMTREX, CHMO, BURE, ATCU, AQCH, ZIVA, PLZO, CIRY, CASP	Area 3
Boyd Tisi No. 2 Western	None	AMPE, PEAMCI, LIPI	Cameron SE (35111-G3) / AZ	None	LIPI, PEAMCI, FAPE, EMTREX, BURE, AQCH, ERRO, ASBE, AMPE	Area 3
Charles Keith	None	None	Oljeto (37110-A3) / UT, AZ	None	LIPI, FAPE, EMTREX, CHMO, BURE, AQCH	Area 1, Area 3

SITE	EO1MI	EO3MI	QUAD	MSO	POTS	AREAS
Eunice Becenti	None	None	Gallup East (35108-E6) / NM	None	FAPE, EMTREX, ATCU, AQCH, LENA, ERSI, ERRH, ERAC	Area 3
Harvey Blackwater No. 3	AQCH	AQCH, PUPA	Garnet Ridge (36109-H7) / AZ, UT	None	VUMA, LIPI, FAPE, EMTREX, CIME, BURE, ATCU, AQCH, ZIVA, PUPA, PRSP, PLZO, CIRY, CASP, ASWE	Area 3
Harvey Blackwater No. 3	AQCH	AQCH, PUPA	Mexican Hat SE (37109-A7) / UT, AZ	None	VUMA, FAPE, EMTREX, ATCU, AQCH, ZIVA, PLZO, CIRY, CASP, ASWE	Area 1
Hoskie Tso No. 1	AQCH	AQCH	Indian Wells (35110-D1) / AZ	None	FAPE, CHMO, BURE, ATCU, AQCH, SAPAER	Area 3
Mitten No. 3	None	AQCH	Oljeto (37110-A3) / UT, AZ	None	LIPI, FAPE, EMTREX, CHMO, BURE, AQCH	Area 3
NA-0904	None	AQCH	Toh Atin Mesa East (36109-H3) / AZ, UT	None	STOCLU, LIPI, PTLU, GIRO, FAPE, EMTREX, CHMO, ATCU, AQCH, PUPA	Area 3
NA-0928	None	None	Toh Atin Mesa East (36109-H3) / AZ, UT	None	STOCLU, LIPI, PTLU, GIRO, FAPE, EMTREX, CHMO, ATCU, AQCH, PUPA	Area 3
Oak124, Oak125	AQCH	AQCH	Horse Mesa (36109-F1) / AZ, NM	None	LIPI, FAPE, EMTREX, CHMO, BURE, AQCH, ZIVA, PUPA, PLZO, CIRY, CASP	Area 3
Occurrence B	None	AQCH, CASP	Del Muerto (36109-B4) / AZ	None	LIPI, FAPE, EMTREX, CIME, AQCH, ZIVA, PLZO, CYUT, CIRY, CASP, ALGO	Area 3
Section 26 (Desiddero Group)	None	None	Dos Lomas (35107-C7) / NM	None	FAPE, CHMO, ATCU, AQCH	Area 3
Standing Rock	None	None	Dalton Pass (35108-F3) / NM	None	VUMA, MUNI, FAPE, CHMO, BURE, ATCU, AQCH, ERSI, ASNA	Area 3

SITE	EO1MI	EO3MI	QUAD	MSO	POTS	AREAS
Tsosie 1	AQCH	AQCH	Toh Atin Mesa East (36109-H3) / AZ, UT	None	STOCLU, LIPI, PTLU, GIRO, FAPE, EMTREX, CHMO, AQCH, PUPA	Area 1, Area 3

5. Conditional Criteria Notes *(Recent revisions made please read thoroughly. For certain species, and/or circumstances, please read and comply)*

A. **Biological Resource Land Use Clearance Policies and Procedures (RCP)** - The purpose of the RCP is to assist the Navajo Nation government and chapters ensure compliance with federal and Navajo laws which protect, wildlife resources, including plants, and their habitat resulting in an expedited land use clearance process. After years of research and study, the NNDFW has identified and mapped wildlife habitat and sensitive areas that cover the entire Navajo Nation.
The following is a brief summary of six (6) wildlife areas:
1.***Highly Sensitive Area*** – recommended no development with few exceptions.
2.***Moderately Sensitive Area*** – moderate restrictions on development to avoid sensitive species/habitats.
3.***Less Sensitive Area*** – fewest restrictions on development.
4.***Community Development Area*** – areas in and around towns with few or no restrictions on development.
5.***Biological Preserve*** – no development unless compatible with the purpose of this area.
6.***Recreation Area*** – no development unless compatible with the purpose of this area.
None - outside the boundaries of the Navajo Nation
This is not intended to be a full description of the RCP please refer to the our website for additional information at http://www.nndfw.org/clup.htm.

B. **Raptors** – If raptors are known to occur within 1 mile of project location: Contact Chad Smith at 871-7070 regarding your evaluation of potential impacts and mitigation.
o **Golden and Bald Eagles**- If Golden or Bald Eagle are known to occur within 1 mile of the project, decision makers need to ensure that they are not in violation of the Golden and Bald Eagle Nest Protection Regulations found at http://nnhp.nndfw.org/docs_reps/gben.pdf.
o **Ferruginous Hawks** – Refer to "Navajo Nation Department of Fish and Wildlife's Ferruginous Hawk Management Guidelines for Nest Protection" http://nnhp.nndfw.org/docs_reps.htm for relevant information on avoiding impacts to Ferruginous Hawks within 1 mile of project location.
o **Mexican Spotted Owl** - Please refer to the Navajo Nation Mexican Spotted Owl Management Plan http://nnhp.nndfw.org/docs_reps.htm for relevant information on proper project planning near/within spotted owl protected activity centers and habitat.

C. **Surveys** – Biological surveys need to be conducted during the appropriate season to ensure they are complete and accurate please refer to NN Species Accounts http://nnhp.nndfw.org/sp_account.htm. Surveyors on the Navajo Nation must be permitted by the Director, NNDFW. Contact Jeff Cole at (928) 871-7068 for permitting procedures. Questions pertaining to surveys should be directed to the NNDFW Zoologist (Chad Smith) for animals at 871-7070, and Botanist (Andrea Hazelton) for plants at (928)523-3221. Questions regarding biological evaluation should be directed to Jeff Cole at 871-7068.

D. **Oil/Gas Lease Sales** – Any settling or evaporation pits that could hold contaminants should be lined and covered. Covering pits, with a net or other material, will deter waterfowl and other migratory bird use. Lining pits will protect ground water quality.

E. **Power line Projects** – These projects need to ensure that they do not violate the regulations set forth in the Navajo Nation Raptor Electrocution Prevention Regulations found at http://nnhp.nndfw.org/docs_reps/repr.pdf.

F. **Guy Wires** – Does the project design include guy wires for structural support? If so, and if bird species may occur in relatively high concentrations in the project area, then guy wires should be equipped with highly visual markers to reduce the potential mortality due to bird-guy wire collisions. Examples of visual markers include aviation balls and bird flight diverters. Birds can be expected to occur in relatively high concentrations along migration routes (e.g., rivers, ridges or other distinctive linear topographic features) or where important habitat for breeding, feeding, roosting, etc. occurs. The U.S. Fish and Wildlife Service recommends marking guy wires with at least one marker per 100 meters of wire.

G. **San Juan River** – On 21 March 1994 (Federal Register, Vol. 59, No. 54), the U.S. Fish and Wildlife Service designated portions of the San Juan River (SJR) as critical habitat for Ptychocheilus lucius (Colorado pikeminnow) and Xyrauchen texanus (Razorback sucker). Colorado pikeminnow critical habitat includes the SJR and its 100-year floodplain from the State Route 371 Bridge in T29N, R13W, sec. 17 (New Mexico Meridian) to Neskahai Canyon in the San Juan arm of Lake Powell in T41S, R11E, sec. 26 (Salt Lake Meridian) up to the full pool elevation. Razorback sucker critical habitat includes the SJR and its 100-year floodplain from the Hogback Diversion in T29N, R16W, sec. 9 (New Mexico Meridian) to the full pool elevation at the mouth of Neskahai Canyon on the San Juan arm of Lake Powell in T41S, R11E, sec. 26 (Salt Lake Meridian). All actions carried out, funded or authorized by a federal agency which may alter the constituent elements of critical habitat must undergo section 7 consultation under the Endangered Species Act of 1973, as amended. Constituent elements are those physical and biological attributes essential to a species conservation and include, but are not limited to, water, physical habitat, and biological environment as required for each particular life stage of a species.

H. **Little Colorado River** - On 21 March 1994 (Federal Register, Vol. 59, No. 54) the U.S. Fish and Wildlife Service designated Critical Habitat along portions of the Colorado and Little Colorado Rivers (LCR) for Gila cypha (humpback chub). Within or adjacent to the Navajo Nation this critical habitat includes the LCR and its 100-year floodplain from river mile 8 in T32N R6E, sec. 12 (Salt and Gila River Meridian) to its confluence with the Colorado River in T32N R5E sec. 1 (S&GRM) and the Colorado River and 100-year floodplain from Nautuloid Canyon (River Mile 34) T36N R5E sec. 35 (S&GRM) to its confluence with the LCR. All actions carried out, funded or authorized by a federal agency which may alter the constituent elements of Critical Habitat must undergo section 7 consultation under the Endangered Species Act of 1973, as amended. Constituent elements are those physical and biological attributes essential to a species conservation and include, but are not limited to, water, physical habitat, and biological environment as required for each particular life stage of a species.

I. **Wetlands** – In Arizona and New Mexico, potential impacts to wetlands should also be evaluated. The U.S. Fish & Wildlife Service's National Wetlands Inventory (NWI) maps should be examined to determine whether areas classified as wetlands are located close enough to the project site(s) to be impacted. In cases where the maps are inconclusive (e.g., due to their small scale), field surveys must be completed. For field surveys, wetlands identification and delineation methodology contained in the "Corps of Engineers Wetlands Delineation Manual" (Technical Report Y-87-1) should be used. When wetlands are present, potential impacts must be addressed in an environmental assessment and the Army Corps of Engineers, Phoenix office, must be contacted. NWI maps are available for examination at the Navajo Natural Heritage Program (NNHP) office, or may be purchased through the U.S. Geological Survey (order forms are available through the NNHP). The NNHP has complete coverage of the Navajo Nation, excluding Utah, at 1:100,000 scale; and coverage at 1:24,000 scale in the southwestern portion of the Navajo Nation. In Utah, the U.S. Fish & Wildlife Service's National Wetlands Inventory maps are not yet available for the Utah portion of the Navajo Nation, therefore, field surveys should be completed to determine whether wetlands are located close enough to the project site(s) to be impacted. For field surveys, wetlands identification and delineation methodology contained in the "Corps of Engineers Wetlands Delineation Manual" (Technical Report Y-87-1) should be used. When wetlands are present, potential impacts must be addressed in an environmental assessment and the Army Corps of Engineers, Phoenix office, must be contacted. For more information contact the Navajo Environmental Protection Agency's Water Quality Program.

J. **Life Length of Data Request** – The information in this report was identified by the NNHP and NNDFW's biologists and computerized database, and is based on data available at the time of this response. If project planning takes more than two (02) years from the date of this response, verification of the information provided herein is necessary. It should not be regarded as the final statement on the occurrence of any species, nor should it substitute for on-site surveys. Also, because the NNDFW information is continually updated, any given information response is only wholly appropriate for its respective request.

K. **Ground Water Pumping** - Projects involving the ground water pumping for mining operations, agricultural projects or commercial wells (including municipal wells) will have to provide an analysis on the effects to surface water and address potential impacts on all aquatic and/or wetlands species listed below. NESL Species potentially impacted by ground water pumping: Carex specuicola (Navajo Sedge), Cirsium rydbergii (Rydberg's Thistle), Primula specuicola (Cave Primrose), Platanthera zothecina (Alcove Bog Orchid), Puccinellia parishii (Parish Alkali Grass), Zigadenus vaginatus (Alcove Death Camas), Perityle specuicola (Alcove Rock Daisy), Symphyotrichum welshii (Welsh's American-aster), Coccyzus americanus (Yellow-billed Cuckoo), Empidonax traillii extimus (Southwestern Willow Flycatcher), Rana pipiens (Northern Leopard Frog), Gila cypha (Humpback Chub), Gila robusta (Roundtail Chub), Ptychocheilus lucius (Colorado Pikeminnow), Xyrauchen texanus (Razorback Sucker), Cinclus mexicanus (American Dipper), Speyeria nokomis (Western Seep Fritillary), Aechmophorus clarkia (Clark's Grebe), Ceryle alcyon (Belted Kingfisher), Dendroica petechia (Yellow Warbler), Porzana carolina (Sora), Catostomus discobolus (Bluehead Sucker), Cottus bairdi (Mottled Sculpin), Oxyloma kanabense (Kanab Ambersnail)

6. Personnel Contacts

Wildlife Manager
Sam Diswood
928.871.7062
sdiswood@nndfw.org

Zoologist
Chad Smith
928.871.7070
csmith@nndfw.org

Botanist
Vacant

Biological Reviewer
Pamela Kyselka
928.871.7065
pkyselka@nndfw.org

GIS Supervisor
Dexter D Prall
928.645.2898
prall@nndfw.org

Wildlife Tech
Sonja Detsoi
928.871.6472
sdetsoi@nndfw.org

7. Resources

National Environmental Policy Act

Navajo Endangered Species List:
http://nnhp.nndfw.org/endangered.htm

Species Accounts:
http://nnhp.nndfw.org/sp_account.htm

Biological Investigation Permit Application
http://nnhp.nndfw.org/study_permit.htm

Navajo Nation Sensitive Species List
http://nnhp.nndfw.org/study_permit.htm

Various Species Management and/or Document and Reports
http://nnhp.nndfw.org/docs_reps.htm

Consultant List
(Coming Soon)

Dexter D Prall, GIS Supervisor - Natural Heritage Program
Navajo Nation Department of Fish and Wildlife

MWH

BUILDING A BETTER WORLD

November 18, 2015

TO: Navajo Natural Heritage Program
Navajo Nation Dept. of Fish and Wildlife
ATTN: Sonja Detsoi and Dexter Prall
P.O. Box 1480
Window Rock, AZ 86515

FROM: MWH Americas
ATTN: Eileen Dornfest, Project Manager
3665 John F Kennedy Parkway
Bldg 1, Suite 206
Ft. Collins, CO 80525
Phone: (970) 377-9410
Fax: (970) 377-9406
E-mail: Eileen.Dornfest@mwhglobal.com

SUBJECT: Request for T and E Information for 16 Abandoned Uranium Mine (AUM) Sites

PROJECT NAME:
Navajo Nation AUM Environmental Response Trust (ERT) Project

LOCATION:
16 AUM Sites (attached in GIS shape files and USGS topographic maps)

SUMMARY DESCRIPTION OF PROJECT:
The work is to be conducted at 16 Abandoned Uranium Mines (AUMs) and includes Removal Site Evaluations (RSEs) according to CERCLA at each of the Sites. The RSEs are site investigations that include the following activities:

- conducting background soil studies
- conducting gamma radiation scans of surface soils
- sampling surface and subsurface soils and sediments related to historic mining operations
- assessing radiation exposure inside mine operations buildings, homes, or other nearby structures (if present at the Sites)
- sampling existing and accessible groundwater wells
- mitigating physical hazards and other interim response actions
- preparing a final written report documenting the work performed and information obtained for each of the Sites

MWH

BUILDING A BETTER WORLD

TOPOGRAPHIC MAPS ATTACHED:

- Blue Gap Quadrangle, Arizona-Apache Co.
- Cameron SE Quadrangle, Arizona-Coconino Co.
- Cameron South Quadrangle, Arizona-Coconino Co.
- Del Muerto Quadrangel, Arizona-Apache Co.
- Five Buttes Quadrangle, Arizona-Navajo Co.
- Garnet Ridge Quadrangle, Arizona-Utah
- Horse Mesa Quadrangle, Arizona-New Mexico
- Indian Wells Quadrangle, Arizona-Navajo Co.
- Tah Chee Wash Quadrangle, Arizona-Apache Co.
- Toh Atin Mesa East Quadrangle, Arizona-Utah
- Toh Atin Mesa West Quadrangle, Arizona-Utah
- Bluewater Quadrangle, New Mexico
- Bread Springs Quadrangle, New Mexico-McKinley Co.
- Dalton Pass Quadrangle, New Mexico-McKinley Co.
- Dos Lomas Quadrangle, New Mexico
- Gallup East Quadrangle, New Mexico-McKinley Co.
- Sand Spring Quadrangle, New Mexico-San Juan Co.
- Standing Rock Quadrangle, New Mexico-McKinley Co.
- Mexican Hat SE Quadrangle, Utah-San Juan Co.
- Oljato Quadrangle, Utah-San Juan Co.

3665 John F Kennedy Pkwy.
Bldg 1, Suite 206
Ft. Collins, CO 80525

TEL 970 377 9410
FAX 970 377 9406
www.mwhglobal.com

THE NAVAJO NATION
HISTORIC PRESERVATION DEPARTMENT
PO Box 4950, Window Rock, Arizona 86515
TEL: (928) 871-7198 FAX: (928) 871-7886

CULTURAL RESOURCE COMPLIANCE FORM

ROUTE COPIES TO:	NNHPD NO.: HPD-16-482
☑ DCRM	OTHER PROJECT NO.: DCRM 2016-08

PROJECT TITLE: A Cultural Resource Inventory of Two Abandoned Uranium Mines (Hoskie Tso No. 1 and Boyd Tisi No. 2) in Indian Wells and Cameron Chapter, Navajo Nation.

LEAD AGENCY: USEPA

SPONSORS: 1. Sadie Hoskie, Trustee, The Navajo Nation AUMs Environmental Response, P.O. Box 3330, Window Rock, AZ 86515
2. MWH Global, Inc., 2130 Resort Dr., STE. 200, Steamboat Springs, Colorado 80487

PROJECT DESCRIPTION: The proposed undertaking will involve the complete Removal Site Evaluations (RSEs) to define the horizontal extent of contamination in surface soils and sediments at two former uranium mine areas. Ground disturbance includes collecting soil & sediment samples for analysis & drilling/minor excavation work. The area of effect is 22.-6-acres (Hoskie Tso No. 1=23.7-acres; Boyd Tisi No. 2=13.3-acres). Ground disturbing activities will be intensive and extensive with the use of heavy equipment.

LAND STATUS:	Navajo Tribal Trust													
CHAPTER:	Indian Wells & Cameron													
LOCATION: Hoskie Tso Mine	***T.***	**23**	***N.,***	***R.***	**21**	***E-***	***Sec.***	**Unplatted;**	Indian Wells	Quadrangle,	Navajo	County	Arizona	G&SRPM
LOCATION Boyd Tisi Mine	***T.***	**29**	***N.,***	***R.***	**10**	***E-***	***Sec.***	**Unplatted;**	Cameron SE	Quadrangle,	Coconino	County	Arizona	G&SRPM

PROJECT ARCHAEOLOGIST:	Jeffrey Begay & Jeremy Begay
NAVAJO ANTIQUITIES PERMIT NO.:	B16041
DATE INSPECTED:	4/20/2016 – 5/4/16
DATE OF REPORT:	6/15/2016
TOTAL ACREAGE INSPECTED:	37.0 – ac
METHOD OF INVESTIGATION:	Class III pedestrian inventory with transects spaced 10-12 m apart.
LIST OF CULTURAL RESOURCES FOUND:	**(8) Isolated Occurrences (IO**
LIST OF ELIGIBLE PROPERTIES:	**None**
LIST OF NON-ELIGIBLE PROPERTIES:	**(8) IO**
LIST OF ARCHAEOLOGICAL RESOURCES:	**None**

EFFECT/CONDITIONS OF COMPLIANCE: No historic properties affected.

In the event of a discovery [*"discovery"* means any previously unidentified or incorrectly identified cultural resources including but not limited to archaeological deposits, human remains, or locations reportedly associated with Native American religious/traditional beliefs or practices], all operations in the immediate vicinity of the discovery must cease, and the Navajo Nation Historic Preservation Department must be notified at (928) 871-7198.

FORM PREPARED BY: **Tamara Billie**
FINALIZED: July 19, 2016

Notification to Proceed Recommended
Conditions: ☑ Yes ☐ No / ☐ Yes ☑ No — The Navajo Nation Historic Preservation Office — 7/20/16 Date

Navajo Region Approval: X Yes ☐ No — Acting BIA – Navajo Regional Office — 8-29-16 Date

NNDFW Review No. 15mwh101-bt2

BIOLOGICAL RESOURCES COMPLIANCE FORM
NAVAJO NATION DEPARTMENT OF FISH AND WILDLIFE
P.O. BOX 1480, WINDOW ROCK, ARIZONA 86515-1480

It is the Department's opinion the project described below, with applicable conditions, is in compliance with Tribal and Federal laws protecting biological resources including the Navajo Endangered Species and Environmental Policy Codes, U.S. Endangered Species, Migratory Bird Treaty, Eagle Protection and National Environmental Policy Acts. This form does not preclude or replace consultation with the U.S. Fish and Wildlife Service if a Federally-listed species is affected.

PROJECT NAME & NO.: Boyd Tisi No. 2 - Abandoned Uranium Mine Project

DESCRIPTION: Proposed Phase I & II scientific investigations at an abandoned mine site. Phase I would entail biological and land surveying with a maximum of 5 people onsite for no more than 5-7 days. Disturbance would be light. Phase II would require the use of an excavator or a small mobile drilling unit to collect one or more soil samples with up to 8 people onsite for a period of one week. A temporary travel corridor 20 ft. in width would be necessary to move equipment to the site. Disturbance would be light to moderate. No permanent structures would be left onsite. The proposed project area (mine boundary and buffer) would be approximately 13.3 acres.

LOCATION: 35°51'42"N 111°22'18"W, Coalmine Mesa Chapter, Coconino County, Arizona

REPRESENTATIVE: Lori Gregory, Adkins Consulting, Inc. for MWH Global/Stantec

ACTION AGENCY: U.S. Environmental Protection Agency and Navajo Nation

B.R. REPORT TITLE / DATE / PREPARER: BE-Boyd Tisi No. 2 Abandoned Uranium Mine Project/AUG 2016/Lori Gregory, Plant Survey Report for Species of Concern At Boyd Tisi No. 2 Project Site/AUG 2016/Redente Ecological Consultants

SIGNIFICANT BIOLOGICAL RESOURCES FOUND: Area 3. Suitable nesting habitat is present in the project area for Migratory Birds not listed under the NESL or ESA. Migratory Birds and their habitats are protected under the Migratory Bird Treaty Act (16 USC §703-712) and Executive Order 13186. Under the EO, all federal agencies are required to consider management impacts to protect migratory non-game birds.

POTENTIAL IMPACTS

NESL SPECIES POTENTIALLY IMPACTED: NA

FEDERALLY-LISTED SPECIES AFFECTED: NA

OTHER SIGNIFICANT IMPACTS TO BIOLOGICAL RESOURCES: NA

AVOIDANCE / MITIGATION MEASURES: Mitigation measures will be implemented to ensure that there are no impacts to migratory birds that could potentially nest in the project area.

CONDITIONS OF COMPLIANCE*: NA

FORM PREPARED BY / DATE: Pamela A. Kyselka/17 NOV 2016

COPIES TO: (add categories as necessary)

☐ _____ ☐ _____

2 NTC § 164 Recommendation:	Signature	Date
☒Approval ☐Conditional Approval (with memo) ☐Disapproval (with memo) ☐Categorical Exclusion (with request letter) ☐None (with memo)	Gloria M. Tom, Director, Navajo Nation Department of Fish and Wildlife	11/08/16

*I understand and accept the conditions of compliance, and acknowledge that lack of signature may be grounds for the Department not recommending the above described project for approval to the Tribal Decision-maker.

Representative's signature Date

From:	Nystedt, John
To:	Justin Peterson
Cc:	Lori Gregory; Pam Kyselka; tbillie@navajo-nsn.gov; Harrilene Yazzie; Melissa Mata
Subject:	Navajo Nation AUM Environmental Response Trust - -First Phase
Date:	Monday, November 07, 2016 4:08:30 PM
Attachments:	image001.png

Justin,

Thank you for your November 6, 2016, email. This email documents our response regarding the subject project, in compliance with section 7 of the Endangered Species Act of 1973 (ESA) as amended (16 U.S.C. 1531 et seq.). Based on the information you provided, we believe no endangered or threatened species or critical habitat will be affected by this project; nor is this project likely to jeopardize the continued existence of any proposed species or adversely modify any proposed critical habitat. No further review is required for this project at this time. Should project plans change or if new information on the distribution of listed or proposed species becomes available, this determination may need to be reconsidered. In all future communication on this project, please refer to consultation numbers given below.

In keeping with our trust responsibilities to American Indian Tribes, by copy of this email, we will notify the Navajo Nation, which may be affected by the proposed action and encourage you to invite the Bureau of Indian Affairs to participate in the review of your proposed action.

Should you require further assistance or if you have any questions, please contact me as indicated below, or my supervisor, Brenda Smith, at 556-2157. Thank you for your continued efforts to conserve endangered species.

Claim 28	02EAAZ00-2016-SLI-0358
Section 26 (Desiddero Group)	02ENNM00-2016-SLI-0447
Mitten #3	06E23000-2016-SLI-0210
NA-0904	02EAAZ00-2016-SLI-0363
Occurrence B	02EAAZ00-2016-SLI-0361
Standing Rock	02ENNM00-2016-SLI-0448
Alongo Mines	02ENNM00-2016-SLI-0465
Tsosie 1*	02EAAZ00-2016-SLI-0364
Boyd Tisi No. 2 Western	02EAAZ00-2016-SLI-0355
Harvey Blackwater #3	02EAAZ00-2016-SLI-0356 / 06E23000-2016-SLI-0207
Oak 124/125	02ENNM00-2016-SLI-0466
NA-0928	02EAAZ00-2016-SLI-0360
Hoskie Tso #1	02EAAZ00-2016-SLI-0362
Charles Keith	06E23000-2016-SLI-0208
Barton 3	02EAAZ00-2016-SLI-0354
Eunice Becenti	02ENNM00-2016-SLI-0444

* It is our understanding that the Tsosie No. 1 site has been put on hold indefinitely due to access issues. However, provided the results of the survey were negative (i.e., no potential for

any ESA-listed species) then we would come to the same conclusion, above, as for the other 15 projects.

.‥..‥..‥..‥...‥..‥..‥..‥..‥..‥..‥..‥...‥..‥..‥..‥..‥.

Fish and Wildlife Biologist/AESO Tribal Coordinator
USFWS AZ Ecological Services Office - Flagstaff Suboffice
Southwest Forest Science Complex, 2500 S Pine Knoll Dr, Rm 232
Flagstaff, AZ 86001-6381 (928) 556-2160 Fax-2121 Cell:(602) 478-3797
http://www.fws.gov/southwest/es/arizona/

Appendix F Data Usability Report, Laboratory Analytical Data, and Data Validation Reports

F.1 Data Usability Report

F.2 Laboratory Analytical Data and Data Validation Reports

(provided in a separate electronic file due to its file size and length)

F.1 Data Usability Report

DATA USABILITY REPORT

1.0 INTRODUCTION

This data usability report presents a summary of the validation results for the sample data collected from the Boyd Tisi No. 2 Site (the Site) as part of the Removal Site Evaluation (RSE) performed for the Navajo Nation AUM Environmental Response Trust—First Phase. The purpose of the validation was to ascertain the data usability measured against the data quality objectives (DQOs) and confirm that results obtained are scientifically defensible.

Samples were collected between October 24, 2016 and March 17, 2017 and were analyzed by ALS Environmental of Ft. Collins, Colorado, for all methods. Samples were analyzed for one or more of the following:

- Radium-226 in soil by United States Environmental Protection Agency (USEPA) Method 901.1
- Metals in soil by USEPA Method SW6020
- Isotopic thorium in soil by USDOEAS-06/EMSL/LV

Samples were collected and analyzed according to the procedures and specific criteria presented in the *Quality Assurance Project Plan, Navajo Nation AUM Environmental Response Trust (QAPP)* (MWH, 2016).

Project data were validated as follows:

- Laboratory Data Consultants, Inc. (LDC) of Carlsbad, California, performed validation of all radiological soil data, plus ten percent of the non-radiological data (Level IV only)
- All non-radiological soil data were validated by the Stantec Consulting Services Inc. (Stantec; formerly MWH) Project Chemist (Level III only)
- All samples received Level III data validation
- Ten percent of the sample results for all methods received a more detailed Level IV validation

The analytical data were validated based on the results of the following data evaluation parameters or quality control (QC) samples:

- Compliance with the QAPP
- Sample preservation
- Sample extraction and analytical holding times

- Initial calibration (ICAL), initial calibration verification (ICV), and continuing calibration verification (CCV) results
- Method and initial/continuing calibration blank (ICB/CCB) sample results
- Matrix spike/matrix spike duplicate (MS/MSD) sample results
- Laboratory duplicate results
- Serial dilution (metals analysis only)
- Interference check samples (ICS) (metals analysis only)
- Laboratory control sample (LCS) and laboratory control sample duplicate (LCSD) results
- Field duplicate sample results
- Minimum detectable concentration (radiological analyses only)
- Reporting limits
- Sample result verification
- Completeness evaluation
- Comparability evaluation

Sample results that were qualified due to quality control parameters outside of acceptance criteria are listed on Table F.1-1.

2.0 DATA VALIDATION RESULTS

Stantec reviewed the data validation reports and assessed the qualified data against the DQOs for the project. The following summarizes the data validation findings for each of the data evaluation parameters.

2.1 QUALITY ASSURANCE PROJECT PLAN COMPLIANCE EVALUATION

Based on the data validation, all samples were analyzed following the quality control criteria specified in the QAPP, with the following exception: ALS routinely dilutes all metals samples by a factor of 10 times in order to protect their ICP-MS instrument from the adverse effects of running samples with high total dissolved solids. This also includes running a long series of samples (as is common in a production laboratory) with intermediate dissolved solids. The vulnerable parts of the instrument are the nebulizer, which produces an aerosol, and the cones, which disperse the aerosol. These areas form scaly deposits from the samples in the sample solution, despite the

nitric acid and other acids present in the digestate. These parts of the instrument periodically need to be taken apart and cleaned, but in a production setting the laboratory wants to avoid any downtime as much as possible. As an ameliorating factor, the laboratory also takes account of this dilution factor up front in the project planning stages. The laboratory will not quote a reporting limit for this instrument that cannot be achieved after the 10 times dilution required for the instrument. Not all of the requested reporting limits can be met using the laboratory's routine protocol. The dilution is narrated by the laboratory merely as a matter of transparency, as well as for the validator's information. The dilution should have no impact on the project's sensitivity goals.

Sample Preservation Evaluation. All samples were preserved as specified in the QAPP.

Holding Time Evaluation. All analytical holding times were met.

Initial Calibration, Initial Calibration Verification, and Continuing Calibration Verification Evaluation. All ICAL, ICV, and CCV results were within acceptance criteria.

Method Blank Evaluation. No sample data were qualified due to method blank results.

Initial and Continuing Calibration Blank Evaluation. No sample data were qualified due to ICB/CCB data.

Matrix Spike/Matrix Spike Duplicate Samples Evaluation. All MS/MSD recoveries were within acceptance criteria with the exception of a few metals. Table F.1-1 lists the analytes where an MS and/or MSD percent recovery was outside the acceptance criteria. Sample results were qualified with a "J+" flag for results that are estimated and potentially biased high; sample results were qualified with a "J-" flag for results that are estimated and potentially biased low. All MS/MSD RPDs were within acceptance criteria.

Laboratory Duplicate Sample Evaluation. For some analyses, the laboratory prepared and analyzed a duplicate sample. RPD results were evaluated between the parent and laboratory duplicate samples. Sample results qualified due to laboratory duplicate RPDs outside of the acceptance criteria are listed on Table F.1-1. Sample results were qualified with a "J" flag if not otherwise qualified.

Serial Dilution Evaluation. All serial dilution percent differences were within acceptance criteria with the exception of one uranium result. The sample result was qualified with a "J" flag to indicate an estimated result.

Interference Check Sample Evaluation. All interference check samples were within acceptance criteria.

Laboratory Control Sample/Laboratory Control Sample Duplicate Evaluation. All LCS and LCSD recoveries were within acceptance criteria. All LCS/LCSD RPDs were within acceptance criteria.

Field Duplicate Evaluation. The RPDs were less than the guidance RPD of 30 percent established in the QAPP for all field duplicate pairs, with the exception of results for four metals and one radium-226. The primary cause for RPDs exceeding 30 percent for some duplicate pairs is assumed to be the heterogeneity/variability of soil samples. The sample IDs, sample results, and RPDs for those results that did not meet the guidance RPD are listed in Table F.1-2. Sample results were not qualified due to RPDs exceeding the guidance criteria, as described in the QAPP.

Minimum Detectable Concentration Evaluation. All minimum detectable concentrations met reporting limits with the exception of four samples for the analysis of radium-226. However, the reported activity for each of these samples was greater than the achieved minimum detectable concentration and no qualification was needed.

Reporting Limit Evaluation. All sample data were reported to the reporting limit established in the QAPP, with the exception of the metals, as discussed at the beginning of this section related to dilution.

Sample Result Verification. All sample result verifications were acceptable with the exception of 35 samples analyzed for radium-226. Cases that exceed the limit of +/- 15% of the density of the calibration standard were qualified with a "J+" flag for those results that may be biased high and a "J-" flag for those results that may be biased low (see Table F.1-1).

Completeness Evaluation. All samples and QC samples were collected as scheduled, resulting in 100 percent sampling completeness for this project. Based on the results of the data validation described in the previous sections, all data are considered valid as qualified. No data were rejected; consequently, analytical completeness was 100 percent, which met the 95 percent analytical completeness goal established in the QAPP.

Comparability Evaluation. Comparability is a qualitative parameter that expresses the confidence that one data set may be compared to another. For this project, sample collection and analysis followed standard methods and the data were reported using standard units of measure as specified in the QAPP. In addition, QC data for this project indicate the data are comparable. As a result, the data from this project should be comparable to other data collected at this Site using similar sample collection and analytical methodology.

3.0 DATA VALIDATION SUMMARY

Precision. Based on the MS/MSD sample, LCS/LCSD sample, laboratory duplicate sample, and field duplicate results, the data are precise as qualified.

Accuracy. Based on the ICAL, ICV, CCV, MS/MSD, and LCS, the data are accurate as qualified.

Representativeness. Based on the results of the sample preservation and holding time evaluation; the method and ICB/CCB blank sample results; the field duplicate sample

evaluation; and the RL evaluation the data are considered representative of the Site as reported.

Completeness. All media and QC sample results were valid and collected as scheduled; therefore, completeness for this RSE is 100 percent.

Comparability. Standard methods of sample collection and standard units of measure were used during this project. The analysis performed by the laboratory was in accordance with current USEPA methodology and the QAPP.

Based on the results of the data validation, all data are considered valid as qualified.

Table F.1-1
Summary of Qualified Data
Boyd Tisi No. 2
Removal Site Evaluation Report - Final
Navajo Nation AUM Environmental Response Trust - First Phase

Field Sample Identification	Sample Date	Analysis Code	Analyte	Sample Result	Units	QC Type	QC Result	QC Limit	Added Flag	Comment
S135-BG1-001	10/24/16	E901.1	Radium-226	0.62	pCi/g	Result Verification		±15%	J-	Result is estimated, potentially biased low. Sample density differs by more than 15% of LCS density.
S135-BG1-002	10/24/16	E901.1	Radium-226	0.63	pCi/g	Result Verification		±15%	J-	Result is estimated, potentially biased low. Sample density differs by more than 15% of LCS density.
S135-BG1-003	10/24/16	E901.1	Radium-226	0.56	pCi/g	Result Verification		±15%	J-	Result is estimated, potentially biased low. Sample density differs by more than 15% of LCS density.
S135-BG1-004	10/24/16	E901.1	Radium-226	0.5	pCi/g	Result Verification		±15%	J-	Result is estimated, potentially biased low. Sample density differs by more than 15% of LCS density.
S135-BG1-005	10/24/16	E901.1	Radium-226	0.52	pCi/g	Result Verification		±15%	J-	Result is estimated, potentially biased low. Sample density differs by more than 15% of LCS density.
S135-BG1-006	10/24/16	E901.1	Radium-226	0.58	pCi/g	Result Verification		±15%	J-	Result is estimated, potentially biased low. Sample density differs by more than 15% of LCS density.
S135-BG1-007	10/24/16	E901.1	Radium-226	0.62	pCi/g	Result Verification		±15%	J-	Result is estimated, potentially biased low. Sample density differs by more than 15% of LCS density.
S135-BG1-008	10/24/16	E901.1	Radium-226	0.71	pCi/g	Result Verification		±15%	J-	Result is estimated, potentially biased low. Sample density differs by more than 15% of LCS density.
S135-BG1-009	10/24/16	E901.1	Radium-226	0.7	pCi/g	Result Verification		±15%	J-	Result is estimated, potentially biased low. Sample density differs by more than 15% of LCS density.
S135-BG1-009	10/24/16	SW6020	Vanadium	9.8	mg/kg	LR	22%	20%	J	Result is estimated, bias unknown. LR RPD outside acceptance criteria.

Notes

mg/kg milligrams per kilogram	MS matrix spike
pCi/g picocuries per gram	MSD matrix spike duplicate
LCS laboratory control sample	RPD relative percent difference
LR laboratory replicate (duplicate)	

Table F.1-1
Summary of Qualified Data
Boyd Tisi No. 2
Removal Site Evaluation Report - Final
Navajo Nation AUM Environmental Response Trust - First Phase

Field Sample Identification	Sample Date	Analysis Code	Analyte	Sample Result	Units	QC Type	QC Result	QC Limit	Added Flag	Comment
S135-BG1-010	10/24/16	E901.1	Radium-226	0.51	pCi/g	Result Verification		±15%	J-	Result is estimated, potentially biased low. Sample density differs by more than 15% of LCS density.
S135-BG1-201	10/24/16	E901.1	Radium-226	0.6	pCi/g	Result Verification		±15%	J-	Result is estimated, potentially biased low. Sample density differs by more than 15% of LCS density.
S-135-BG3-001	3/17/17	E901.1	Radium-226	3.15	pCi/g	Result Verification		±15%	J+	Result is estimated, potentially biased low. Sample density differs by more than 15% of LCS density.
S-135-BG3-002	3/17/17	SW6020	Vanadium	35	mg/kg	MS MSD	139% 160%	75% - 125% 75% - 125%	J+	Result is estimated, potentially biased high. MS and MSD recoveries above acceptance criteria.
S-135-BG3-008	3/17/17	E901.1	Radium-226	1.42	pCi/g	Result Verification		±15%	J+	Result is estimated, potentially biased low. Sample density differs by more than 15% of LCS density.
S135-BG4-003	3/17/17	E901.1	Radium-226	1.83	pCi/g	Result Verification		±15%	J+	Result is estimated, potentially biased low. Sample density differs by more than 15% of LCS density.
S135-BG4-006	3/17/17	E901.1	Radium-226	1.41	pCi/g	Result Verification		±15%	J+	Result is estimated, potentially biased low. Sample density differs by more than 15% of LCS density.
S135-C05-001	10/26/16	E901.1	Radium-226	0.64	pCi/g	Result Verification		±15%	J-	Result is estimated, potentially biased low. Sample density differs by more than 15% of LCS density.
S135-SCX-001-1	10/26/16	SW6020	Arsenic	1.3	mg/kg	LR	33%	20%	J	Result is estimated, bias unknown. LR RPD outside acceptance criteria.
S135-SCX-001-1	10/26/16	SW6020	Uranium	0.6	mg/kg	MS LR	136% 28%	75% - 125% 20%	J+	Result is estimated, potentially biased high. MS recovery above acceptance criteria. LR RPD outside acceptance criteria.

Notes
mg/kg milligrams per kilogram
pCi/g picocuries per gram
LCS laboratory control sample
LR laboratory replicate (duplicate)
MS matrix spike
MSD matrix spike duplicate
RPD relative percent difference

Table F.1-1
Summary of Qualified Data
Boyd Tisi No. 2
Removal Site Evaluation Report - Final
Navajo Nation AUM Environmental Response Trust - First Phase

Field Sample Identification	Sample Date	Analysis Code	Analyte	Sample Result	Units	QC Type	QC Result	QC Limit	Added Flag	Comment
S135-SCX-001-2	10/26/16	E901.1	Radium-226	0.61	pCi/g	Result Verification		±15%	J-	Result is estimated, potentially biased low. Sample density differs by more than 15% of LCS density.
S135-SCX-002-2	10/26/16	E901.1	Radium-226	0.63	pCi/g	Result Verification		±15%	J-	Result is estimated, potentially biased low. Sample density differs by more than 15% of LCS density.
S135-SCX-004-2	10/26/16	E901.1	Radium-226	13.9	pCi/g	Result Verification		±15%	J-	Result is estimated, potentially biased low. Sample density differs by more than 15% of LCS density.
S135-SCX-007-01	11/12/16	E901.1	Radium-226	1.21	pCi/g	Result Verification		±15%	J-	Result is estimated, potentially biased low. Sample density differs by more than 15% of LCS density.
S135-SCX-007-04	11/12/16	E901.1	Radium-226	10.3	pCi/g	Result Verification		±15%	J	Result is estimated, bias unknown. Sample volume not within 0.5 cm of associated calibration volume.
S135-SCX-009-02	11/12/16	E901.1	Radium-226	0.84	pCi/g	Result Verification		±15%	J-	Result is estimated, potentially biased low. Sample density differs by more than 15% of LCS density.
S135-SCX-010-02	11/12/16	E901.1	Radium-226	0.8	pCi/g	Result Verification		±15%	J-	Result is estimated, potentially biased low. Sample density differs by more than 15% of LCS density.
S135-SCX-010-03	11/12/16	E901.1	Radium-226	0.61	pCi/g	Result Verification		±15%	J-	Result is estimated, potentially biased low. Sample density differs by more than 15% of LCS density.
S135-SCX-011-01	11/12/16	E901.1	Radium-226	13	pCi/g	Result Verification		±15%	J-	Result is estimated, potentially biased low. Sample density differs by more than 15% of LCS density.
S135-SCX-011-02	11/12/16	E901.1	Radium-226	8.2	pCi/g	Result Verification		±15%	J-	Result is estimated, potentially biased low. Sample density differs by more than 15% of LCS density.

Notes
mg/kg milligrams per kilogram
pCi/g picocuries per gram
LCS laboratory control sample
LR laboratory replicate (duplicate)
MS matrix spike
MSD matrix spike duplicate
RPD relative percent difference

Table F.1-1
Summary of Qualified Data
Boyd Tisi No. 2
Removal Site Evaluation Report - Final
Navajo Nation AUM Environmental Response Trust - First Phase

Field Sample Identification	Sample Date	Analysis Code	Analyte	Sample Result	Units	QC Type	QC Result	QC Limit	Added Flag	Comment
S135-SCX-011-03	11/12/16	E901.1	Radium-226	0.81	pCi/g	Result Verification		±15%	J-	Result is estimated, potentially biased low. Sample density differs by more than 15% of LCS density.
S135-SCX-012-03	11/12/16	E901.1	Radium-226	71.4	pCi/g	Result Verification		±15%	J-	Result is estimated, potentially biased low. Sample density differs by more than 15% of LCS density.
S135-SCX-012-04	11/12/16	E901.1	Radium-226	0.63	pCi/g	Result Verification		±15%	J-	Result is estimated, potentially biased low. Sample density differs by more than 15% of LCS density.
S135-SCX-013-02	11/13/16	E901.1	Radium-226	0.73	pCi/g	Result Verification		±15%	J-	Result is estimated, potentially biased low. Sample density differs by more than 15% of LCS density.
S135-SCX-013-03	11/13/16	E901.1	Radium-226	0.62	pCi/g	Result Verification		±15%	J-	Result is estimated, potentially biased low. Sample density differs by more than 15% of LCS density.
S135-SCX-014-03	11/13/16	E901.1	Radium-226	0.72	pCi/g	Result Verification		±15%	J-	Result is estimated, potentially biased low. Sample density differs by more than 15% of LCS density.
S135-SCX-016-01	11/13/16	SW6020	Uranium	0.65	mg/kg	Serial Dilution	181%	10%	J	Serial dilution %D greater than acceptance criteria.
S135-SCX-016-01	11/13/16	SW6020	Vanadium	29	mg/kg	MS MSD LR	40% 8% 47%	75% - 125% 75% - 125% 20%	J-	Result is estimated, potentially biased low. MS and MSD recoveries below acceptance criteria. LR RPD outside
S135-SCX-016-02	11/13/16	E901.1	Radium-226	0.73	pCi/g	Result Verification		±15%	J-	Result is estimated, potentially biased low. Sample density differs by more than 15% of LCS density.
S135-SCX-213-03	11/13/16	E901.1	Radium-226	1.24	pCi/g	Result Verification		±15%	J+	Result is estimated, potentially biased high. Sample density differs by more than 15% of LCS density.
S135-SCX-214-03	11/13/16	E901.1	Radium-226	0.67	pCi/g	Result Verification		±15%	J-	Result is estimated, potentially biased low. Sample density differs by more than 15% of LCS density.

Notes
mg/kg milligrams per kilogram
pCi/g picocuries per gram
LCS laboratory control sample
LR laboratory replicate (duplicate)
MS matrix spike
MSD matrix spike duplicate
RPD relative percent difference

Table F.1-2
Results that did not Meet the Relative Percent Difference Guidance
Boyd Tisi No. 2
Removal Site Evaluation Report - Final
Navajo Nation AUM Environmental Response Trust - First Phase

Primary Sample / Duplicate Indentification	Sample Date	Parameter	Primary Result	Duplicate Result	Units	RPD (%)
S135-BG1-001/S135-BG1-201	10/24/2016	Arsenic	0.89	2.4	mg/kg	92%
S135-BG1-001/S135-BG1-201	10/24/2016	Vanadium	7.7	11	mg/kg	35%
S135-SCX-013-03/S135-SCX-213-03	11/13/2016	Arsenic	2	1.4	mg/kg	35%
S135-SCX-013-03/S135-SCX-213-03	11/13/2016	Radium-226	0.62	1.24	pCi/g	67%
S135-SCX-014-03/S135-SCX-214-03	11/13/2016	Vanadium	14	8.6	mg/kg	48%

Notes
mg/kg milligrams per kilogram
pCi/g picocuries per gram
RPD relative percent difference