SEMS-RM DOCID # 100016415

Barton 3 (#220)

Removal Site Evaluation Report

Final | October 9, 2018

Stantec

NAVAJO NATION
AUM Environmental Response Trust-First Phase

Barton 3 (#220) Removal Site Evaluation Report - Final

October 9, 2018

Prepared for:

Navajo Nation AUM Environmental Response Trust – First Phase

Prepared by:

Stantec Consulting Services Inc.

Title and Approval Sheet

Title: Barton 3 Removal Site Evaluation Report - Final

Approvals

This Removal Site Evaluation Report is approved for implementation without conditions.

Dr. Donald Benn Navajo Nation Environmental Protection Agency Executive Director	10/15/18 Date
Linda Reeves US Environmental Protection Agency, Region 9 Remedial Project Manager	10/17/18 Date
Sadie Hoskie Navajo Nation AUM Environmental Response Trust – First Phase Trustee	10/18/2018 Date
Toby Leeson, P.G. Stantec Consulting Services, Inc. Project Technical Lead	10/18/2018 Date

Revision Log

Revision No.	Date	Description
0	April 18, 2018	Submission of Draft RSE report to Agencies for review
1	October 9, 2018	Submission of Final RSE report to Agencies

Stantec

NAVAJO NATION
AUM Environmental Response Trust-First Phase

Sign-off Sheet

This document entitled *Barton 3 Removal Site Evaluation Report* was prepared by MWH, now part of Stantec Consulting Services Inc. (Stantec) on behalf of the Navajo Nation AUM Environmental Response Trust – First Phase (the "Client") for submittal to the Navajo Nation Environmental Protection Agency (NNEPA) and United States Environmental Protection Agency (USEPA) (collectively, the "Agencies"). The material in it reflects Stantec's professional judgment in light of the scope, schedule and other limitations stated in the document and in the contract between Stantec and the Client. The opinions in the document are based on conditions and information existing at the time the document was published and do not take into account any subsequent changes. In preparing the document, Stantec did not verify information supplied to it by others. Any use which a third party makes of this document is the responsibility of such third party. Such third party agrees that Stantec shall not be responsible for costs or damages of any kind, if any, suffered by it or any other third party as a result of decisions made or actions taken based on this document.

Per the *Navajo Nation AUM Environmental Response Trust Agreement – First Phase*, *Section 5.4.1,* (United States [US], 2015) the following certification must be signed by a person who supervised or directed the preparation of the Removal Site Evaluation report: "Under penalty of law, I certify that to the best of my knowledge, after appropriate inquiries of all relevant persons involved in the preparation of this report, the information submitted herein is true, accurate, and complete. I am aware that there are significant penalties for submitting false information, including the possibility of fine and imprisonment for knowing violations."

Prepared by _____

(signature)

Emily Yeager, P.G.

Reviewed by _____

(signature)

Kelly Johnson, PhD, P.G.

Approved by _____

(signature)

Toby Leeson, P.G.

Table of Contents

1.0 INTRODUCTION 1.1
1.1 BACKGROUND 1.1
1.2 OBJECTIVES AND PURPOSE OF THE REMOVAL SITE EVALUATION 1.2
1.3 REPORT ORGANIZATION 1.4

2.0 SITE HISTORY AND PHYSICAL CHARACTERISTICS 2.1
2.1 SITE HISTORY AND LAND USE 2.1
2.1.1 Mining Practices and Background 2.1
2.1.2 Ownership and Surrounding Land Use 2.1
2.1.3 Site Access 2.2
2.1.4 Previous Work at the Site 2.2
2.2 PHYSICAL CHARACTERISTICS 2.3
2.2.1 Regional and Site Physiography 2.3
2.2.2 Geologic Conditions 2.4
2.2.3 Regional Climate 2.5
2.2.4 Surface Water Hydrology 2.6
2.2.5 Vegetation and Wildlife 2.6
2.2.6 Cultural Resources 2.6
2.2.7 Observations of Potential Mining and Reclamation 2.7

3.0 SUMMARY OF SITE INVESTIGATION ACTIVITIES 3.1
3.1 INTRODUCTION 3.1
3.2 SUMMARY OF SITE CLEARANCE ACTIVITIES 3.3
3.2.1 Desktop Study 3.3
3.2.2 Field Investigations 3.4
3.3 SUMMARY OF REMOVAL SITE EVALUATION ACTIVITIES 3.12
3.3.1 Baseline Studies Activities 3.12
3.3.2 Site Characterization Activities and Assessment 3.17
3.3.3 Identification of TENORM Areas 3.19
3.4 DATA MANAGEMENT AND DATA QUALITY ASSESSMENT 3.20
3.4.1 Data Management 3.20
3.4.2 Data Quality Assessment 3.21

4.0 FINDINGS AND DISCUSSION 4.1
4.1 BACKGROUND REFERENCE AREA STUDY RESULTS AND CALCULATION OF INVESTIGATION LEVELS 4.1
4.2 SITE GAMMA RADIATION SURVEY RESULTS AND PREDICTED RADIUM-226 CONCENTRATIONS 4.4
4.2.1 Site Gamma Radiation Results 4.4
4.2.2 Gamma Correlation Results 4.6
4.3 SOIL METALS AND RADIUM-226 ANALYTICAL RESULTS 4.9
4.4 CONSTITUENTS OF POTENTIAL CONCERN 4.12
4.5 AREAS THAT EXCEED THE INVESTIGATION LEVELS 4.12

4.6 AREAS OF TENORM AND NORM 4.13
4.7 TENORM VOLUME ESTIMATE 4.16
4.8 POTENTIAL DATA GAPS AND SUPPLEMENTAL STUDIES 4.19
4.8.1 Data Gaps 4.19
4.8.2 Supplemental Studies 4.19

5.0 SUMMARY AND CONCLUSIONS 5.1

6.0 ESTIMATE OF REMOVAL SITE EVALUATION COSTS 6.1

7.0 REFERENCES 7.1

LIST OF TABLES

Table 3-1 Soil and Sediment Sampling Summary

Table 3-2 Mine Feature Samples and Area

Table 4-1 Background Reference Area Soil Sample Analytical Results

Table 4-2 Static Gamma Measurement Summary

Table 4-3 Gamma Correlation Study Soil and Sediment Sample Analytical Results

Table 4-4a Site Characterization Soil Sample Analytical Results for Survey Area A

Table 4-4b Site Characterization Soil and Sediment Sample Analytical Results for Survey Area B

Table 4-5 Summary of Investigation Level Exceedances in Soil/Sediment at Borehole Locations

LIST OF FIGURES

Figure 1-1 Site Location

Figure 2-1 Site Features

Figure 2-2 Historical Mine Drawing Overlay

Figure 2-3 Regional Aerial Photograph

Figure 2-4 Regional Topographic Map

Figure 2-5 Site Topography

Figure 2-6 Regional Geology

Figure 2-7a Site Geology

Figure 2-7b Site Exposed Bedrock

Figure 2-8 Site Map

Figure 3-1a Historical Aerial Photograph Comparison

Figure 3-1b 1967 Historical Aerial Photograph Comparison

Figure 3-2 Potential Background Reference Areas

Figure 3-3 Background Reference Areas - Sample Locations

Figure 3-4 Gamma Radiation Survey Areas

Figure 3-5 Gamma Correlation Study Locations

Figure 3-6a Site Characterization Surface and Subsurface Sample Locations

Figure 3-6b Sample Locations Compared to Mining-Related Features

Figure 4-1a Gamma Radiation Survey Results

Figure 4-1b Gamma Radiation Survey Results for Survey Area A

Figure 4-1c Gamma Radiation Survey Results for Survey Area B

Figure 4-2a Predicted Concentrations of Ra-226 in Soil Using the Correlation Equation

Figure 4-2b Predicted Ra-226 Concentrations in Soil Compared to Ra-226 Concentrations in Soil/Sediment

Figure 4-2c Predicted Ra-226 Concentrations in Soil Compared to Ra-226 ILs

Figure 4-3 Surface and Subsurface Metals and Ra-226 Analytical Results

Figure 4-4a Lateral Extent of Surface and Subsurface IL Exceedances

Figure 4-4b Survey Area A Lateral Extent of Surface and Subsurface IL Exceedances

Figure 4-4c Survey Area B Lateral Extent of Surface and Subsurface IL Exceedances

Figure 4-5 Vertical Extent of IL Exceedances in Unconsolidated Material

Figure 4-6 TENORM Compared to Lateral Extent of IL Exceedances

Figure 4-7 TENORM Compared to Gamma Radiation Survey Results

Figure 4-8a TENORM that Exceed ILs

Figure 4-8b Survey Area A TENORM that Exceed ILs

Figure 4-8c Survey Area B TENORM that Exceed ILs

Figure 4-8d TENORM that Exceeds ILs Compared to Mining-Related Features

Figure 4-9a Volume Estimate of TENORM that Exceeds ILs

Figure 4-9b Sample Locations and TENORM that Exceeds ILs

LIST OF APPENDICES

Appendix A – Radiological Characterization of the Barton 3 Abandoned Uranium Mine

Appendix B – Photographs

B.1 Site Photographs

B.2 Regional Site Photographs

Appendix C - Field Activity Forms

C.1 Soil Sample Field Forms

C.2 Drilling and Hand Auger Borehole Logs

Appendix D –Evaluation of RSE Data

D.1 Background Reference Area Selection

D.2 Statistical Evaluation

Appendix E – Cultural and Biological Resource Clearance Documents

Appendix F – Data Usability Report, Laboratory Analytical Data, and Data Validation Reports

F.1 Data Usability Report

F.2 Laboratory Analytical Data and Data Validation Reports

LIST OF ATTACHMENTS – PROVIDED ELECTRONICALLY TO THE AGENCIES

- Site-specific geodatabase
- Tabular database files
- 2017 Cooper aerial survey orthophotographs and data files
- Historical documents referenced in this RSE Report (refer to Section 7 for complete citation)
    - Chenoweth, 1984 – Historical Review of Uranium-Vanadium Production in the Eastern Carrizo Mountains, San Juan County, New Mexico, and Apache County, Arizona
    - Chenoweth, 1985 – Historical Review Uranium-Vanadium Production in the Northern and Western Carrizo Mountains, Apache County, Arizona
    - NAML, 1999 – Carrizo #1 AML Project Contract Documents
    - USEPA, 2007a – Abandoned Uranium Mines and the Navajo Nation. Navajo Nation AUM Screening Assessment Report and Atlas with Geospatial Data
    - Weston Solutions, 2010 - Barton 3 AUM Site Navajo Abandoned Uranium Mine Site Screen Report

Executive Summary

Introduction

The Barton 3 site (the Site) is located within the Navajo Nation, Shiprock Bureau of Indian Affairs (BIA) Agency, Red Mesa Chapter in northeastern Arizona, near the border of Arizona and Utah. The Site is one of 46 "priority" abandoned uranium mines (AUMs) within the Navajo Nation selected by the United States Environmental Protection Agency (USEPA) in collaboration with the Navajo Nation Environmental Protection Agency (NNEPA) for further evaluation based on radiation levels and potential for water contamination (USEPA, 2013). Mining for uranium occurred prior to, during, and after World War II, when the United States (US) sought a domestic source of uranium located on Navajo lands (USEPA, 2007a).

On April 30, 2015, the *Navajo Nation AUM Environmental Response Trust Agreement – First Phase* (the *Trust Agreement*) became effective. The *Trust Agreement* was made by and among the US, as Settlor and as Beneficiary on behalf of the USEPA, the Navajo Nation, as Beneficiary, and the Trustee, Sadie Hoskie. The *Trust Agreement* was developed in accordance with a settlement on April 8, 2015 between the US and Navajo Nation for the investigation of 16 specified priority AUMs. The priority sites were selected by the US and Navajo Nation, as described in the *Trust Agreement*:

> "based on two primary criteria, specifically, demonstrated levels of Radium-226[1]: (a) at or in excess of 10 times the background levels and the existence of a potentially inhabited structure located within 0.25 miles of AUM features; or (b) at or in excess of two times background levels and the existence of a potentially inhabited structure located within 200 feet (ft)."

The purpose of this report is to summarize the objectives, field investigation activities, findings, and conclusions of Site Clearance and Removal Site Evaluation (RSE) activities conducted between July 2015 and August 2017 at the Site. The primary objectives of the RSEs are to provide data required to evaluate relevant site conditions and to support future removal action evaluations at the Sites. It is not intended to establish cleanup levels or determine cleanup options or potential remedies. The purpose of the RSE data (e.g., the review of relevant information and the collection of data related to historical mining activities) is to determine the volume of technologically enhanced naturally occurring radioactive material (TENORM) at the Site in excess of Investigation Levels (ILs) as a result of historical mining activities. ILs are based on the background gamma measurements (in counts per minute [cpm]), and Radium-226 (Ra-226) and metals concentrations, determined through statistical analyses, that are used to evaluate potential mining-related impacts.

[1] The Agencies selected the priority mines based on gamma radiation but the *Trust Agreement* erroneously states "levels of Radium -226".

Site History and Physical Characteristics

The Site is located within the Colorado Plateau physiographic province, which is an area of approximately 240,000 square miles in the Four Corners region of Utah, Colorado, Arizona, and New Mexico. The Site was one of the small mining operations in the Carrizo Mountain mining region, located specifically in the northwestern Carrizo Mountain mining region. Bedrock outcrops on or adjacent to the Site consist of the Jurassic Salt Wash Member of the Morrison Formation and the Jurassic Summerville Formation. The Morrison Formation produced approximately 4.7 million pounds of uranium from areas of Arizona and New Mexico. The Site is also located within the San Juan River watershed, an area of approximately 24,600 square miles spanning Utah, Colorado, New Mexico, and Arizona. Topographically the Site is located along a topographic ridge and the elevation on-site is approximately 5,470 ft above mean sea level. On-site overland surface water flow, when present, is controlled by a decrease in elevation to the north from the topographic ridge to the surrounding plains.

The Site was only in operation during 1954 and details regarding mine workings at the Site were not identified. The US Atomic Energy Commission (USAEC) ore production records showed production from the Site in 1954 was 31 tons (approximately 62,000 pounds) of ore that contained 75 pounds of 0.12 percent U_3O_8 (uranium oxide) and 324 pounds of 0.52 percent V_2O_5 (vanadium oxide).

In 1999, the Site was included in the Carrizo #1 Project bid document and was referred to in the bid document as Barton 3 Mine or NA-0508 (NAML, 1999). Closeout reports for the Carrizo #1 NAML Project Reclamation Project could not be located. However, in 2007 the USEPA listed the Site as reclaimed (USEPA, 2007a). In 2010 Weston Solutions (Weston) performed site screening on behalf of the USEPA. The screening included: (1) recording site observations (i.e., number of homes, water sources, and sensitive environments[2] around the Site); (2) recording the type, number, and reclamation status of mine features; and (3) performing a surface gamma survey

Summary of Removal Site Evaluation Activities

The Trust's RSE was performed in accordance with the *Site Clearance Work Plan* (MWH, 2016a) and the *Removal Site Evaluation Work Plan* ([*RSE Work Plan*] MWH, 2016b). The *Site Clearance Work Plan* and the *RSE Work Plan* were approved in April and October 2016, respectively, by the NNEPA and the USEPA (collectively, the Agencies). The Trust conducted Site Clearance activities as the initial task for the RSE work to obtain information necessary to develop the *Removal Site Evaluation Work Plan* ([*RSE Work Plan*] MWH, 2016b). Following Site Clearance activities, the Trust conducted two sequential tasks to complete the RSE: Baseline Studies activities and Site Characterization Activities and Assessment. Details of the Site Clearance activities, Baseline Studies activities, and Site Characterization and Assessment activities are as follows:

[2] Weston defined sensitive environments as "all sensitive environments located within visible range of the mine site, including: wetlands, endangered species, habitats and approximate locations of sites that may be under protection of the government of the Navajo Nation"

- **Site Clearance activities** consisted of a desktop study of historical information, site mapping, potential background reference area evaluation, biological (vegetation and wildlife) surveys, and cultural resource survey. Results of the Site Clearance activities provided historical information, site access information, potential background reference area data, and vegetation, wildlife, and cultural clearance of the Site for the Baseline Studies activities and Site Characterization and Assessment activities to commence.

- **Baseline Studies activities** included a background reference area study, site gamma radiation surveys, and a Gamma Correlation Study. Results of the Baseline Studies were used to plan and prepare the Site Characterization Activities and Assessment. Data collected in the background reference area (soil sampling, laboratory analyses, surface gamma surveying, and subsurface static gamma measurements) were used to establish ILs for the Site. Data collected from the site gamma radiation survey were used, along with sampling, to evaluate potential mining-related impacts in areas containing radionuclides. The Gamma Correlation Study objectives were to determine the correlations between: (1) gamma measurements and concentrations of Ra-226 in surface soils; and (2) gamma measurements and exposure rates; to use as screening tools for site assessments.

- **Site Characterization Activities and Assessment** included surface and subsurface soil and sediment sampling. The results of the surface and subsurface soil and sediment sampling analyses were used to evaluate mining impacts and define the lateral and vertical extent of TENORM at the Site.

Findings and Discussion

Surface and subsurface soil and sediment sampling results. Two background reference areas were selected to develop surface gamma, subsurface static gamma, Ra-226, and metals ILs for the Site.

Arsenic, molybdenum, uranium, vanadium, and Ra-226 concentrations in soil/sediment and gamma radiation measurements exceeded their respective ILs and are confirmed COPCs for the Site. An IL for selenium was not identified because selenium sample results were non-detect in the background areas. However, because selenium was detected in Survey Areas A and B, it is also confirmed as a COPC for the Site.

Arsenic, molybdenum, uranium, vanadium, and Ra-226 concentrations and gamma radiation measurements in soil/sediment exceeded their respective ILs and are confirmed constituents of potential concern (COPCs) for the Site. An IL for selenium was not identified because selenium sample results were non-detect in the background areas. However, because selenium was detected in soil/sediment samples from the Survey Area (i.e., the full areal extent of the Site surface gamma survey), it is also confirmed as a COPC for the Site. Based on the data analysis performed for this report along with the multiple lines of evidence, approximately 9.4 acres, out of the 15.4 acres of the Survey Area (i.e., the full areal extent of the Site surface gamma survey), were estimated to contain TENORM. Of the 9.4 acres that contain TENORM, 7.2 acres contain TENORM exceeding the surface gamma ILs. The volume of TENORM in excess of ILs was estimated to be 19,126 yd^3 (14,623 cubic meters).

Gamma Correlation Study results. The Gamma Correlation Study indicated that surface gamma survey results correlate with Ra-226 concentrations in soil. Therefore, gamma surveys could be used during site assessments as a field screening tool to estimate Ra-226 concentrations in soil, where sampling or gamma surveys are not available. The model was made of the correlation results predicting the concentrations of Ra-226 in surface soils from the mean of the gamma measurements in five correlation locations. Additional correlation studies may be needed to refine the relationship between gamma and Ra-226.

Based on the Site Clearance and RSE data collection and analysis for the Site, potential data gaps were identified and are presented in Section 4.8 of this RSE report. These potential data gaps can be taken into consideration for subsequent evaluations in support of future Removal or Remedial Action evaluations at the Site.

Acronyms/Abbreviations

°F	degrees Fahrenheit
e.g.	exempli gratia
etc.	et cetera
bcy	bank cubic yard
ft	feet
ft^2	square feet
i.e.	id est
mg/kg	milligram per kilogram
µR/hr	microRoentgens per hour
pCi/g	picocuries per gram
yd^3	cubic yards
Adkins	Adkins Consulting Inc.
ags	above ground surface
amsl	above mean sea level
AUM	abandoned uranium mine
bgs	below ground surface
BIA	Bureau of Indian Affairs
CCV	continuing calibration verification
C.F.R	Code of Federal Regulations
COPC	constituent of potential concern
cpm	counts per minute
Dinétahdóó	Dinétahdóó Cultural Resource Management
DMP	Data Management Plan
DQO	Data Quality Objective
ERG	Environmental Restoration Group, Inc.
ESA	Endangered Species Act
FSP	Field Sampling Plan
GIS	geographic information system
GPS	global positioning system
HASP	Health and Safety Plan
ICAL	initial calibration
ICB/CCB	initial/continuing calibration blank
ICV	initial calibration verification
IL	Investigation Level
LCS/LCSD	laboratory control sample/laboratory control sample duplicate

MARSSIM	Multi-agency Radiation Survey and Site Investigation Manual
MBTA	Migratory Bird Treaty Act
MLR	Multivariate Linear Regression
MS/MSD	matrix spike/matrix spike duplicate
MWH	MWH, now part of Stantec Consulting Services Inc. (formerly MWH Americas, Inc.)
NaI	sodium iodide
NAML	Navajo Abandoned Mine Lands Reclamation Program
NCP	National Oil and Hazardous Substances Pollution Contingency Plan
NNDFW	Navajo Nation Department of Fish and Wildlife
NNDOJ	Navajo Nation Department of Justice
NNDNR	Navajo Nation Division of Natural Resources
NNDWR	Navajo Nation Department of Water Resources
NNEPA	Navajo Nation Environmental Protection Agency
NNESL	Navajo Nation Endangered Species List
NNHP	Navajo Natural Heritage Program
NNHPD	Navajo Nation Historic Preservation Department
NORM	Naturally Occurring Radioactive Material
QA/QC	quality assurance/quality control
QAPP	Quality Assurance Project Plan
R^2	Pearson's Correlation Coefficient
Ra-226	Radium-226
Redente	Redente Ecological Consultants
RSE	Removal Site Evaluation
SOP	standard operating procedure
Stantec	Stantec Consulting Services Inc.
T&E	threatened and endangered
Th-230	thorium-230
Th-232	thorium-232
TENORM	Technologically Enhanced Naturally Occurring Radioactive Material
U-235	uranium-235
U-238	uranium-238
U_3O_8	uranium oxide
UCL	upper confidence limit
US	United States
U.S.C.	United States Code
UTL	upper tolerance limit
USAEC	US Atomic Energy Commission
USDA	US Department of Agriculture
USEPA	US Environmental Protection Agency
USFWS	US Fish and Wildlife Service
USGS	US Geological Survey

V_2O_5	vanadium oxide
VCA	Vanadium Corporation of America
Weston	Weston Solutions

Glossary

Alluvium – material deposited by flowing water.

Arroyo – a steep sided gully cut by running water in an arid or semiarid region.

Bank cubic yard – a unit designating one cubic yard of earth or rock, measured or calculated before removal from the bank (Dictionary of Construction, 2018).

Bin Range – as presented in the RSE report, a range of values to present surface gamma measurement data in relation to: (1) the surface gamma Investigation Level (IL); (2) multiples of the surface gamma IL; or (3) the mean and standard deviation of the predicted Radium-226 (Ra-226) concentrations for the Site based on the correlation equation.

Class A material - mine waste piles, overburden, subsoil, topsoil or other suitable backfill material with radium-226 (Ra-226) concentration equal to or less than the average Ra-226 concentration of the background area in the immediate vicinity of the project as computed from ground-contact radiological measurements. The material should be free from solid waste, hazardous waste, toxic waste, oil/grease, trash, vegetation, combustible materials and materials that retards vegetative growth (NAML, 1999).

Colluvium – unconsolidated, unsorted, earth material transported under the influence of gravity and deposited on lower slopes (Schaetzl and Thompson, 2015).

Composite sample – "Volumes of material from several of the selected sampling units are physically combined and mixed in an effort to form a single homogeneous sample, which is then analyzed" (USEPA, 2002a).

Constituent of potential concern (COPC) – analytes identified in the *RSE Work Plan* where their levels were confirmed based on the results of the RSE.

Data Validation – "an analyte- and sample-specific process that extends the evaluation of data beyond, method, procedural, or contractual compliance (i.e., data verification) to determine the analytical quality of a specific data set" (USEPA, 2002b).

Data Verification – "the process of evaluating the completeness, correctness and conformance/compliance of a specific data set against the method, procedural, or contractual requirements" (USEPA, 2002b).

Earthworks – human-caused disturbance of the land surface related to mining or reclamation.

Eolian – a deposit that forms as a result of the accumulation of wind-driven products from the weathering of solid bedrock or unconsolidated deposits.

Ephemeral – ephemeral streams flow only in direct response to surface runoff precipitation or melting snow, and their channels are at all times above the water table (USGS, 2003). This concept also applies to ephemeral ponds that contain water in response to surface runoff precipitation or melting snow and are at all times above the water table.

Ethnographic – relating to the scientific description of peoples and cultures with their customs, habits, and mutual differences.

Gamma – a type of radiation that occurs as the result of the natural decay of uranium.

Geochemical – the chemistry of the composition and alterations of the solid matter of the earth (American Heritage Dictionary, 2016).

Geomorphology – the physical features of the surface of the earth and their relation to its geologic structures (English Oxford Dictionary, 2018).

Grab sample – a sample collected from a specific location (and depth) at a certain point in time.

Investigation Level (IL) – based on the background gamma measurements (in counts per minute [cpm]) and, Radium-226 (Ra-226) and metals concentrations, determined through statistical analysis, that are used to evaluate potential mining-related impacts.

Isolated Occurrences – in relation to the Site Cultural Resource Survey: Any non-structural remains of a single event: alternately, any non-structural assemblage of approximately 10 or fewer artifacts within an area of approximately 10 square meters or less, especially if it is of questionable human origin or if it appears to be the result of fortuitous causes. The number and/or composition of observed artifact classes are a useful rule of thumb for distinguishing between a site and an isolate (NNHPD, 2016).

Mineralized – economically important metals in the formation of ore bodies that have been geologically deposited. For example, the process of mineralization may introduce metals, such as uranium, into a rock. That rock may then be referred to as possessing uranium mineralization (World Heritage Encyclopedia, 2017).

Naturally occurring radioactive material (NORM) – "materials which may contain any of the primordial radionuclides or radioactive elements as they occur in nature, such as radium, uranium, thorium, potassium, and their radioactive decay products, that are undisturbed as a result of human activities" (USEPA, 2017).

Orthophotograph – an aerial photograph or image geometrically corrected such that the scale is uniform: the photograph has the same lack of distortion as a map. Unlike an uncorrected aerial photograph, an orthophotograph can be used to measure distances, because it is an accurate representation of the earth's surface, having been adjusted for topographic relief, lens distortion, and camera tilt.

Pan Evaporation – evaporative water losses from a standardized pan.

Radium-226 (Ra-226) – a radioactive isotope of radium that is produced by the natural decay of uranium.

Remedial Action (or remedy) – "those actions consistent with permanent remedy taken instead of, or in addition to, removal action in the event of a release or threatened release of a hazardous substance into the environment, to prevent or minimize the release of hazardous substances so that they do not migrate to cause substantial danger to present or future public health or welfare or the environment…For the purpose of the National Oil and Hazardous Substances Pollution Contingency Plan (NCP), the term also includes enforcement activities related thereto" (USEPA, 1992).

Remove or removal – "the cleanup or removal of released hazardous substances from the environment; such actions as may be necessary taken in the event of the threat of release of hazardous substances into the environment; such actions as may be necessary to monitor, assess, and evaluate the release or threat of release of hazardous substances; the disposal of removed material; or the taking of such other actions as may be necessary to prevent, minimize, or mitigate damage to the public health or welfare of the United States or to the environment, which may otherwise result from a release or threat of release…" (USEPA, 1992).

Respond or response – "remove, removal, remedy, or remedial action, including enforcement activities related thereto" (USEPA, 1992).

Scarified – to break up, loosen, or roughen the surface of something (such as a field or road).

Secular equilibrium – a type of radioactive equilibrium in which the half-life of the precursor (parent) radioisotope is so much longer than that of the product (daughter) that the radioactivity of the daughter becomes equal to that of the parent with time; therefore, the quantity of a radioactive isotope remains constant because its production rate is equal to its decay rate. In secular equilibrium the activity remains constant.

Static gamma measurement – stationary gamma measurement collected for a specific period of time (e.g., 60 seconds).

Technologically enhanced naturally occurring radioactive material (TENORM) – "naturally occurring radioactive materials that have been concentrated or exposed to the accessible environment as a result of human activities such as manufacturing, mineral extraction, or water processing", which includes disturbance from mining activities. Where "technologically enhanced means that the radiological, physical, and chemical properties of the radioactive material have been concentrated or further altered by having been processed, or beneficiated, or disturbed in a way that increases the potential for human and/or environmental exposures" (USEPA, 2017).

Thorium (Th) – "a naturally occurring radioactive metal found at trace levels in soil, rocks, water, plants and animals. Thorium (Th) is solid under normal conditions. There are natural and man-made forms of thorium, all of which are radioactive" (USEPA, 2017).

Th-230 – a radioactive isotope of thorium that is produced by the natural decay of thorium.

Th-232 – a radioactive isotope of thorium that is produced by the natural decay of thorium.

Upper Confidence Limit (UCL) – the upper boundary (or limit) of a confidence interval of a parameter of interest such as the population mean (USEPA, 2015).

Upper Tolerance Limit (UTL) – a confidence limit on a percentile of the population rather than a confidence limit on the mean. For example, a 95 percent one-sided UTL for 95 percent coverage represents the value below which 95 percent of the population values are expected to fall with 95 percent confidence. In other words, a 95 percent UTL with coverage coefficient 95 percent represents a 95 percent UCL for the 95th percentile (USEPA, 2015).

Uranium (U) – a naturally occurring radioactive element that may be present in relatively high concentrations in the geologic materials in the southwest United States.

U-235 – a radioactive isotope of uranium that is produced by the natural decay of uranium.

U-238 – a radioactive isotope of uranium that is produced by the natural decay of uranium.

Walkover gamma radiation survey – referred to as a scanning survey in the Multi-agency Radiation Survey and Site Investigation Manual (*MARSSIM*; USEPA, 2000). A walkover gamma radiation survey is the process by which the operator uses a portable radiation detection instrument to detect the presence of radionuclides on a specific surface (i.e., ground, wall) while continuously moving across the surface at a certain speed and in a certain pattern (USEPA, 2000). Referred to in the RSE report as surface gamma survey after the first mention in the report.

Wind rose – a circular graph depicting average wind speed and direction.

1.0 INTRODUCTION

1.1 BACKGROUND

This report summarizes the purpose and objectives, field investigation activities, findings, and conclusions of Site Clearance and Removal Site Evaluation (RSE) activities conducted between July 2015 and August 2017 at the Barton 3 site (the Site) located in northeastern Arizona, near the border of Arizona and Utah, as shown in Figure 1-1. The Site is also identified by the United States Environmental Protection Agency (USEPA) as abandoned uranium mine (AUM) identification #220 in the *Navajo Nation AUM Screening Assessment Report and Atlas with Geospatial Data* (the *2007 AUM Atlas*; USEPA, 2007a). The *2007 AUM Atlas* was prepared for the USEPA in cooperation with the Navajo Nation Environmental Protection Agency (NNEPA) and the Navajo Abandoned Mine Lands Reclamation Program (NAML). The claim boundary polygon (refer to Figure 2-1) used for the RSE encompassed an area of approximately 0.6 acres (26,136 square feet [ft^2]) and was provided as part of the *2007 AUM Atlas*. Per the *2007 AUM Atlas* this polygon and other factors represent the location and surface extent of the AUM.

Stantec Consulting Services Inc. (Stantec; formerly MWH), performed Site Clearance activities in accordance with the *Site Clearance Work Plan* (MWH, 2016a), and performed RSE activities in accordance with the *Removal Site Evaluation Work Plan* ([*RSE Work Plan*] MWH, 2016b). The *Site Clearance Work Plan* and the *RSE Work Plan* were approved in April and October 2016, respectively, by the NNEPA and the USEPA (collectively, the Agencies). Stantec conducted this investigation on behalf of Sadie Hoskie, Trustee pursuant to Section 1.1.21 of the *Navajo Nation AUM Environmental Response Trust Agreement – First Phase* (the *Trust Agreement*), effective April 30, 2015 (United States [US], 2015). The *Trust Agreement* is made by and among the US, as Settlor, and as Beneficiary on behalf of the USEPA, the Navajo Nation, as Beneficiary, and the Trustee. The *Trust Agreement* was developed in accordance with a settlement on April 8, 2015 between the US and Navajo Nation for the investigation 16 specified "priority" AUMs.

A "Site" is defined in the *Trust Agreement* as:

> "each of the 16 AUMs listed on Appendix A to the Settlement Agreement, including the proximate areas where waste material associated with each such AUM has been deposited, stored, disposed of, placed, or otherwise come to be located." *Trust Agreement*, § 1.1.25.

The Site is one of 46 priority AUMs within the Navajo Nation selected by the USEPA in collaboration with the NNEPA for further evaluation based on radiation levels and potential for water contamination (USEPA, 2013). The 16 priority AUMs included in the *Trust Agreement* are located on Navajo Lands throughout southeastern Utah, northeastern Arizona, and western New Mexico, as shown in Figure 1-1. The 16 priority AUMs were selected by the US and Navajo Nation, as described in the *Trust Agreement*:

> "based on two primary criteria, specifically, demonstrated levels of Radium-226[3]: (a) at or in excess of 10 times the background levels and the existence of a potentially inhabited structure located within 0.25 miles of AUM features; or (b) at or in excess of two times background levels and the existence of a potentially inhabited structure located within 200 feet (ft)." *Trust Agreement*, Recitals.

In addition, the 16 priority AUMs are, for the purposes of this investigation, a subset of priority mines for which a viable private potentially responsible party has not been identified. Mining for uranium occurred prior to, during, and after World War II, when the US sought a domestic source of uranium located on Navajo lands (USEPA, 2007a). *Trust Agreement*, Recitals.

1.2 OBJECTIVES AND PURPOSE OF THE REMOVAL SITE EVALUATION

The primary objectives of the RSEs are to provide data required to evaluate relevant site conditions and to support future removal action evaluations at the Sites. It is not intended to establish cleanup levels or determine cleanup options or potential remedies. The purpose of the RSE data (e.g., the review of relevant information and the collection of data related to historical mining activities) is to determine the volume of technologically enhanced naturally occurring radioactive material (TENORM) at the Site in excess of Investigation Levels (ILs) as a result of historical mining activities. ILs are based on the background gamma measurements (in counts per minute [cpm]), and Radium-226 (Ra-226) and metals concentrations, determined through statistical analysis, that are used to evaluate potential mining-related impacts. The USEPA (2017) defines TENORM as:

> "naturally occurring radioactive materials that have been concentrated or exposed to the accessible environment as a result of human activities such as manufacturing, mineral extraction, or water processing" (mine waste or other mining-related disturbance).
>
> "Technologically enhanced means that the radiological, physical, and chemical properties of the radioactive material have been concentrated or further altered by having been processed, or beneficiated, or disturbed in a way that increases the potential for human and/or environmental exposures."

An understanding of the extent and volume of TENORM that exceeds the ILs at the Site is key information for future Removal or Remedial Action evaluations, including whether, and to what extent, a Response Action is warranted under federal and Navajo law. Definitions presented in the glossary for "Removal", "Remedial Action", and "Response" are defined in 40 Code of Federal Regulations (CFR) Section 300.5 of the National Oil and Hazardous Substances Pollution Contingency Plan (NCP; USEPA, 1992).

[3] The Agencies selected the priority mines based on gamma radiation but the *Trust Agreement* erroneously states "levels of Radium -226".

The Trust conducted Site Clearance activities to obtain information necessary to develop the *RSE Work Plan*. Site Clearance activities consisted of two separate tasks: a "desktop" study (e.g., literature and historical documentation review) and field activities.

Desktop study – included review of readily available and reasonably ascertainable information including:

- Historical and current aerial photographs to identify any potential historical mining features, and to identify if buildings, homes and/or other structures, and potential haul roads were present within 0.25 miles of the Site
- Topographic and geologic maps
- Available data concerning perennial surface water features and water wells
- Previous studies and reclamation activities
- Meteorological data (e.g., predominant wind direction in the region of the Site)

Site Clearance field activities – included the following:

- Site reconnaissance to evaluate in the field: access routes to the Site, location of site boundaries, and observations presented in the Weston Solutions (Weston)(2010) report
- Mapping of site features and boundaries
- Evaluation of potential background reference areas
- Biological surveys (wildlife and vegetation)
- Cultural resource surveys

Following Site Clearance activities, two sequential tasks were conducted to complete the RSE: Baseline Studies and Site Characterization and Assessment. Baseline Studies activities were completed to establish the basis for the Site Characterization and Assessment activities.

Baseline Studies activities – included the following:

- Background Reference Area Study – walkover gamma radiation survey (referred to hereafter as surface gamma survey), subsurface static gamma radiation measurements (referred to hereafter as subsurface static gamma measurements), surface and subsurface soil sampling, and laboratory analysis
- Site gamma survey – surface gamma survey
- Gamma Correlation Study – co-located surface static gamma measurements and exposure-rate measurements at fixed points, high-density surface gamma surveys (intended to cover 100 percent of the survey area), surface soil/sediment sampling, and laboratory analysis

Site Characterization Activities and Assessment – included the following:

- Characterization of surface soils and sediments – surface soil and sediment sampling and laboratory analysis.
- Characterization of subsurface soils and sediments – static gamma measurements (at surface and subsurface hand auger and drilling borehole locations), and subsurface sampling and laboratory analysis. Hand auger and drilling borehole locations are referred to hereafter as boreholes.

Details regarding the Site Clearance activities are provided in the *Barton 3 Site Clearance Data Report* (*Site Clearance Data Report*; MWH, 2016c) and summarized in Section 3.2 of this report. Details regarding the Baseline Study activities are provided in the *Barton 3 Site Baseline Studies Field Report* (Stantec, 2017) and summarized in Section 3.3 of this report. Details regarding the Site Characterization Activities and Assessment are provided in Section 3.3 of this report. Findings are presented in Section 4.0 of this report.

1.3 REPORT ORGANIZATION

This report presents a comprehensive discussion of all RSE activities, including applicable aspects of the outline suggested in the *Multi-Agency Radiation Survey and Site Investigation Manual – Appendix A* ([*MARSSIM*] USEPA, 2000), and consists of the following sections:

Executive Summary – Presents a concise description of the principal elements of the RSE report.

Section 1.0 Introduction – Describes the purpose and objectives of the RSE process, and organization of this RSE report.

Section 2.0 Site History and Physical Characteristics – Presents the history, land use, and physical characteristics of the Site.

Section 3.0 Summary of Site Investigation Activities – Summarizes the Site Clearance and RSE activities.

Section 4.0 Findings and Discussion – Presents the results of the Site Clearance and RSE activities, areas that exceed ILs, areas of Naturally Occurring Radioactive Material (NORM) and TENORM, and the volume of TENORM that exceeds the ILs. Potential data gaps are also presented, as applicable.

Section 5.0 Summary and Conclusions – Summarizes data and presents conclusions based on results of the investigations completed to date.

Section 6.0 Estimate of Removal Site Evaluation Costs – A statement of actual or estimated costs incurred in complying with the *Trust Agreement*, as required by the *Trust Agreement*.

Section 7.0 References – Lists the reference documents cited in this RSE report.

Tables Included at the end of this RSE report.

Figures Included at the end of this RSE report.

Appendices – Appendices A through F.1 are included at the end of this RSE report and Appendix F.2 is provided as a separate electronic file due to its file size and length.

- **Appendix A** – Includes the radiological characterization report for the Site
- **Appendix B** – Includes photographs of the Site
- **Appendix C** – Includes copies of RSE field activity forms
- **Appendix D** – Provides the potential background reference areas selection and the methods and results of the statistical data evaluation for the Site
- **Appendix E** – Includes the biological evaluation report and the biological and cultural resources compliance forms
- **Appendix F** – Includes the Data Usability Report, laboratory analytical data, and data validation reports for the RSE analyses

Attachments – Site-specific geodatabase, tabular database files, and available historical documents referenced in this RSE report.

2.0 SITE HISTORY AND PHYSICAL CHARACTERISTICS

2.1 SITE HISTORY AND LAND USE

2.1.1 Mining Practices and Background

The Site is located on the Navajo Nation near the border of Arizona and Utah and approximately 25 miles southeast of Mexican Water, Arizona, as shown in Figure 1-1 inset. The Site is located in the northwestern Carrizo Mountain mining region. A summary of historical mining, according to Chenoweth (1984, 1985) on the Site and in the region, is presented below.

During the 1920s and 1930s, mining on the Navajo Nation primarily focused on vanadium mining (uranium and vanadium often co-exist in an ore body). In November 1920, the first recorded shipment of uranium and vanadium ore was shipped from the Carrizo Mountain mining region. Between 1942 and 1944, Vanadium Corporation of America (VCA) operated numerous vanadium mines in the Carrizo Mountain mining region. By 1945 mines in the Carrizo Mountain region became inactive due to the decreased need for vanadium. After 1947, prospecting and mining increased in the Carrizo Mountains area. Exploration drilling by both the US Atomic Energy Commission (USAEC) and uranium companies increased in 1953, and additional uranium ore bodies were discovered. To fill the USAEC's need for uranium, VCA reopened their inactive vanadium mines in the Carrizo Mountain region and began mining for uranium. During the mid-1950s, there were more mining operations in the northern and western Carrizo Mountains than at any other time, resulting in large as well as numerous small mining operations throughout the region.

The Site was one of the small mining operations in the Carrizo Mountain mining region, located specifically in the northwestern Carrizo Mountain mining region. The Site was only in operation during 1954 and was operated by Lewis Barton. Details regarding mine workings at the Site were not provided in the Chenoweth documents. The USAEC ore production records showed production from the Site in 1954 was 31 tons (approximately 62,000 pounds) of ore that contained 75 pounds of 0.12 percent U_3O_8 (uranium oxide) and 324 pounds of 0.52 percent V_2O_5 (vanadium oxide).

2.1.2 Ownership and Surrounding Land Use

The Site is located within the Navajo Nation, Shiprock Bureau of Indian Affairs (BIA) Agency in Section 21 of Township 41 North, Range 27 East, Gila and Salt River Principal Meridian. Land ownership where the Site is located falls under Navajo Trust lands. The Site is located within the Red Mesa Chapter of the Navajo Nation, as shown in Figure 1-1, and is in Grazing Unit 9, as designated by the Navajo Nation Division of Natural Resources (NNDNR, 2006). The Site is currently uninhabited, but seven home-sites are located east of and within 0.25 miles of the Site, as shown in Figure 2-1.

2.1.3 Site Access

In 2015, the Navajo Nation Department of Justice (NNDOJ) provided the Trustee with legal access to all Navajo Trust lands to implement work in accordance with the *Trust Agreement*. The Trustee also obtained individual written access agreements from residents living at or near the Site, or with an interest in lands at or near the Site, such as home-site leases and grazing rights, as applicable. In addition, the Trustee consulted with the Red Mesa Chapter officials and nearby residents and notified them of the work.

2.1.4 Previous Work at the Site

2.1.4.1 1999 Carrizo #1 Project Invitation for Reclamation Bids

In 1999, NAML issued an invitation for bids for the reclamation of 14 AUMs, referred to as the Carrizo #1 NAML Project (NAML, 1999). The Site was included in the Carrizo #1 Project bid document, and was referred to in the bid document as Barton 3 Mine or NA-0508. In the bid document NA-0508 was subdivided into two work sites; sub-site A and sub-site B. The location of the RSE Barton 3 site (i.e., the Site) is coincident with NA-0508 sub-site B and the Tom Morgan 1 Mine (reported in the *2007 AUM Atlas*) is coincident with NA-0508 sub-site A. For reference the location of the Tom Morgan 1 Mine is shown in Figure 2-1. The bid document stated that the Site contained a rim strip, one waste pile, and one area of anomalous radioactive measurements. The bid document included a historical drawing of the Site showing the locations of the rim strip (R1), waste pile (WP1), and area of anomalous radioactive measurements. For comparison, the historical NAML drawing is overlain on the current image of the Site in Figure 2-2. The historical drawing location in relation to the current image of the Site is approximate because the historical image could not be georeferenced. In addition, the black-dashed border labeled 0.65 acres on the historical drawing was a border for the reclamation "work area" and was not meant to represent the claim boundary, thus this border and the claim boundary are not meant to line up (refer to Figure 2-2). The bid document listed the following reclamation activities were needed for the Site:

- Excavate 50 bank cubic yards (bcy) of the waste pile and use the excavated material to backfill over the rim strip.

- Excavate 600 bcy of Class A topsoil/cover-soil from a designated borrow source located in the northwest corner of the Site. The bid document historical drawing of the Site (refer to Figure 2-2) also included the location of the borrow source area. Use the Class A material to cover both the area of the backfilled rim strip and the area with anomalous radioactive measurements. The Class A cover should be rough graded to a minimum thickness of 1.5 ft. Class A material was defined in the bid document as: mine waste piles, overburden, subsoil, topsoil or other suitable backfill material with Ra-226 concentration equal to or less than the average Ra-226 concentration of the background area in the immediate vicinity of the project as computed from ground-contact radiological measurements. The material should be free from solid waste, hazardous waste, toxic waste, oil/grease, trash, vegetation, combustible materials and materials that retards vegetative growth.

- Grade the reclaimed area to develop proper post-reclamation contours to establish favorable drainage conditions and erosion protection. The graded slopes of the reclaimed surfaces should be slightly sloped to allow positive drainage.

- Eliminate the access road to the Site.

Closeout reports for the Carrizo #1 NAML Project Reclamation Project could not be located. However, the *2007 AUM Atlas* reported the Site was reclaimed by NAML.

2.1.4.2 2010 Site Screening

In 2010, Weston performed site screening on behalf of the USEPA (Weston, 2010). The screening included: (1) recording site observations (i.e., number of homes, water sources, and sensitive environments[4] around the Site); (2) recording the type, number, and reclamation status of mine features; and (3) performing a surface gamma survey. Weston reported seven home-sites were within 0.25 miles of the Site, no water features were within a one-mile radius of the Site, and no sensitive environments were identified. Weston also reported the Site was reclaimed, identified a potentially capped waste pile, and "small pits" on the Site. Weston did not provide a location or any other details pertaining to the "small pits". Based on Weston's performance of a surface gamma survey, Weston determined that the highest gamma measurements were greater than 10 times the site-specific background level used for its gamma screening.

2.2 PHYSICAL CHARACTERISTICS

2.2.1 Regional and Site Physiography

The Site is located within the Colorado Plateau physiographic province, which is an area of approximately 240,000 square miles in the Four Corners region of Utah, Colorado, Arizona, and New Mexico. Figure 2-3 presents a current regional aerial photograph (NAIP, 2018) of the Site within a portion of the Colorado Plateau. The Colorado Plateau is typically high desert with scattered forests and varying topography having incised drainages, canyons, cliffs, buttes, arroyos, and other features consistent with a regionally uplifted, high-elevation, semi-arid plateau (Encyclopedia Britannica, 2017). The physiographic province landscape includes mountains, hills, mesas, foothills, irregular plains, alkaline basins, some sand dunes, and wetlands. This physiographic province is a large transitional area between the semi-arid grasslands to the east, the drier shrub-lands and woodlands to the north, and the lower, hotter, less-vegetated areas to the west and south.

The Colorado Plateau includes the area drained by the Colorado River and its tributaries: the Green, San Juan, and Little Colorado Rivers (Kiver and Harris, 1999). The physiographic province

[4] Weston defined sensitive environments as "all sensitive environments located within visible range of the mine site, including: wetlands, endangered species, habitats and approximate locations of sites that may be under protection of the government of the Navajo Nation"

is composed of six sections: Uinta Basin, High Plateaus, Grand Canyon, Canyon Lands, Navajo, and Datil-Mogollon. The Site is located within the Navajo section.

The Site is located in the central portion of the Colorado Plateau. Figure 2-4 presents the regional US Geological Survey (USGS) topographic map of a portion of the Colorado Plateau in the vicinity of the Site. Figure 2-5 presents the Site topography (Cooper Aerial Surveys Company [Cooper; refer to Section 3.2.2.1]) within a portion of the Colorado Plateau. The Site is located northwest of the Toh Atin Mesa (refer to Figures 2-3 and 2-4) along a topographic ridge and the elevation on-site is approximately 5,470 ft above mean sea level (amsl).

2.2.2 Geologic Conditions

2.2.2.1 Regional Geology

Regionally the Site is located within the Colorado Plateau, which is a massive outcrop of generally flat-lying sedimentary rocks ranging in age from the Paleozoic Era to the Cenozoic Era (USGS, 2017). The plateau has very little regional structural deformation, compared with the mountainous basin-and-range region to the west, and the sedimentary beds range widely in thickness from less than one inch to hundreds of feet. Changes in paleoclimate and elevation produced alternating occurrences of deserts, streams, lakes, and shallow inland seas; and these changes contributed to the type of rock deposited in the region. The rock units of the plateau consist of shallow submarine or sub-aerially deposited rocks including sandstone, shale, limestone, mudstone, siltstone, and various other sedimentary rock subtypes.

Bedrock on-site consists of the Jurassic Summerville Formation and the Jurassic Salt Wash Member of the Morrison Formation. Regionally, the Summerville Formation is of marginal marine and tidal origin composed of reddish-brown, thinly bedded sandstone with interbedded gypsiferous siltstone, sandy siltstone, or mudstone and is known for its thin beds of rippled sandstones and mud cracks (University of Utah, 2018). Regionally, the Jurassic Morrison Formation is composed of various rocks of lacustrine and fluvial continental origin, including mudstone, sandstone, limestone, and siltstone (USGS, 1967). Figure 2-6 depicts a regional geology map showing the Site in relation to the regional extent of the Morrison Formation. The sandstone strata of the Morrison Formation contain the majority of uranium ore reserves in the US. Deposition of the Morrison Formation may have coincided with uplift of the western basin-and-range region and the beginning of the Nevadan orogeny. The Morrison Formation covers an area of approximately 600,000 square miles (USGS, 1967) and is centered in Wyoming and Colorado, with outcrops in Canada, Montana, North Dakota, South Dakota, Nebraska, Kansas, Oklahoma, Texas, Utah, Idaho, New Mexico, and Arizona (Turner and Peterson, 2004). The Morrison Formation produced approximately 4.7 million pounds of uranium from areas of Arizona and New Mexico (USEPA, 2007a).

2.2.2.2 Site Geology

Bedrock outcrops on or adjacent to the Site consist of the Jurassic Salt Wash Member of the Morrison Formation and the Jurassic Summerville Formation, as shown in Figure 2-7a. The Salt

Wash Member of the Morrison Formation consists of yellowish-gray to greenish-gray cross-bedded very fine- to medium-grained calcareous sandstone interbedded with greenish-gray and reddish–brown claystone. The Summerville Formation consists of reddish-brown to light orange very fine- to fine-grained flat bedded silty sandstone and tin-bedded silty sandstone, claystone, and siltstone. The transition between the Summerville Formation and the Quaternary deposits on-site is not a defined boundary and the Summerville Formation is often overlain by the Quaternary deposits. Outcropping bedrock on Site is shown in Figure 2-7b.

Unconsolidated deposits on-site are alluvium, colluvium, and eolian deposits consisting of variable amounts of silt, sand, and gravel. During the Site Characterization field activities, boreholes were advanced through the unconsolidated deposits using a hand auger or Geoprobe™ 8140LC rotary sonic drilling rig until termination within native material or termination due to refusal at hard surface or bedrock (refer to Section 3.3.2.2 and Appendix C.2 for borehole logs). The unconsolidated deposits ranged in depth from 0.5 ft to 21.0 ft below ground surface (bgs). Conglomerates were also logged at the bottom of boreholes S220-SCX-011, -SCX-012, -SCX-017, -SCX-019, and -SCX-020. The conglomerates are believed to be part of the Westwater Canyon member of the Morrison Formation, which is yellowish-gray sandstone with conglomeratic lenses, and greenish-gray shale.

According to the US Department of Agriculture (USDA) Soil Survey for Apache County, Arizona, soils on-site that have not been disturbed, are classified as Piute soil consisting of gravelly loamy fine sand with slopes ranging from 2 to 25 percent (USDA, 2001). The Site has bedrock outcrops intermixed with the Piute soil.

2.2.3 Regional Climate

The Colorado Plateau is located in a zone of arid temperate climates characterized by periods of drought and irregular precipitation, relatively warm to hot growing seasons, and winters with sustained periods of freezing temperatures (National Park Service, 2017). The average monthly high temperature at weather station 028468, Teec Nos Pos, Arizona (Western Regional Climate Center, 2017) located approximately 20 miles east of the Site, ranges between 41.5 degrees Fahrenheit (°F) in January to 93.1°F in July. Daily temperature extremes reach as high as 105°F in summer and as low as 18°F in winter. Teec Nos Pos receives an average annual precipitation of 8.1 inches, with August being the wettest month, averaging 1.16 inches, and June being the driest month, averaging 0.26 inches.

Potential evaporation in the area is greater than the area's average annual precipitation. The potential evaporation noted at the Many Farms School, Arizona weather station, located approximately 41 miles southwest of the Site, averages 91 inches of pan evaporation annually (Western Regional Climate Center, 2017). Average wind speeds in the area are generally moderate, although relatively strong winds often accompany occasional frontal activity, especially during late winter and spring months. Blowing dust, soil erosion, and local sand-dune migration/formation are common during dry months. The Cortez, Colorado airport, located approximately 50 miles to the northeast of the Site, had the most complete record of wind conditions. A wind rose for the Cortez airport is presented on Figure 1-1. The wind rose was

produced using data contained in the *2007 AUM Atlas* for the years 1996 to 2006. Predominant winds were from the east-northeast (refer to the wind rose on Figure 1-1). However, Stantec field personnel (field personnel) generally observed wind from the west when at the Site, and the Site sits in a valley where winds run west to east as well.

2.2.4 Surface Water Hydrology

The Site is located within the San Juan River watershed, an area of approximately 24,600 square miles spanning Utah, Colorado, New Mexico, and Arizona, as shown in Figure 1-1. On-site overland surface water flow, when present, is controlled by a decrease in elevation to the north from the topographic ridge to the surrounding plains (refer to Figures 2-5 and 2-8). Three parallel patterned ephemeral drainages are present on-site that drain to the northwest and terminate in the surrounding plains, as shown in Figure 2-8. One un-named drainage is located approximately 0.10 miles east of the Site, as shown in Figure 2-8, and runs north into the surrounding plains where it terminates.

Adkins Consulting Inc. (Adkins), under contract to Stantec, performed a wildlife evaluation as part of the Site Clearance field investigations and did not identify any wetlands, seeps, springs, or riparian areas within the Site that would be attractive to wildlife (refer to Appendix E).

2.2.5 Vegetation and Wildlife

In the spring and summer of 2016, biological surveys were conducted as part of Site Clearance activities. In April and May 2016, Adkins conducted wildlife surveys and in July 2016, Redente Ecological Consultants (Redente), under contract to Stantec, conducted a vegetation survey. Information about each survey is provided in Appendix E, which includes the Site biological evaluation reports and the *Navajo Nation Department of Fish and Wildlife* (NNDFW) *Biological Resources Compliance Form*. A summary of the survey activities and findings are provided in Section 3.2.2.3.

Vegetation communities found within the physiographic transitional area described in Section 2.2.1 include shrublands with big sagebrush, rabbitbrush, winterfat, shadscale saltbush, and greasewood; and grasslands of blue grama, western wheatgrass, green needlegrass, and needle-and-thread grass. Higher elevations may support pinyon pine and juniper woodlands. The Site is primarily open shrubland with mixed grasses and sparsely vegetated rocky hills (refer to Appendix E). During the surveys, Stantec and/or its subcontractors observed turkey vulture, common raven, and kangaroo rat (refer to Appendix E). Field personnel also regularly observed sheep grazing in the area of the Site.

2.2.6 Cultural Resources

In March and April 2016, as part of Site Clearance activities, Dinétahdóó Cultural Resource Management (Dinétahdóó), under contract to Stantec, conducted a cultural resource survey, as well as ethnographic and historical data reviews, and interviewed a local resident familiar with the Site (Dinétahdóó, 2016).

During the cultural resource survey Dinétahdóó identified one archaeological site. The local resident stated they remembered mining occurring at the Site and provided information regarding the identified archaeological site. Appendix E includes a copy of the *Cultural Resource Compliance Form,* and findings of the cultural resource survey are summarized in Section 3.2.2.4.

2.2.7 Observations of Potential Mining and Reclamation

During RSE activities, field personnel observed the following features indicative of potential mining or reclamation activities at the Site: a potential haul road, berm, waste pile, graded/disturbed reclaimed area, and an excavation area. Details regarding these observations are presented in Section 3.2.2.1.

On June 5, 2017, a representative from NAML met with field personnel, on-site, to verify what/where reclamation activities had occurred. NAML verified the following (refer to Section 2.1.4 and Figure 2-2):

- The general location of the rim strip that was covered with waste pile material. The surface expression of this area was difficult to discern from native surroundings.
- The general location and boundaries of the borrow source area which was used to provide Class A topsoil/cover-soil. The Class A material was used to cover both the area of the backfilled rim strip and the area with anomalous radioactive measurements shown in the bid documents. However, field personnel observed that the cover material appeared to have eroded since reclamation activities.
- The reclaimed area was graded to establish favorable drainage conditions and erosion protection by directing drainage off of and around the reclaimed area.
- The access road near the Site was scarified and eliminated to prevent Site access.

These observations and NAML confirmations were used, along with additional lines of evidence (refer to Section 3.3.3), to identify areas at the Site where TENORM was present (refer to Section 4.6).

3.0 SUMMARY OF SITE INVESTIGATION ACTIVITIES

3.1 INTRODUCTION

This section summarizes Site Clearance and other RSE activities conducted between July 2015 and August 2017. Site Clearance activities were performed in accordance with the approved *Site Clearance Work Plan.* Resulting RSE activities were performed in accordance with the approved *RSE Work Plan.*

The primary objectives of the RSEs are to provide data required to evaluate relevant site conditions and to support future removal action evaluations at the Sites. It is not intended to establish cleanup levels or determine cleanup options or potential remedies.

The *RSE Work Plan* is comprised of a Field Sampling Plan (FSP), Quality Assurance Project Plan (QAPP), Health and Safety Plan (HASP), and a Data Management Plan (DMP). The FSP guided the fieldwork by defining sampling and data-gathering methods. The QAPP presented quality assurance/quality control (QA/QC) requirements designed to meet Data Quality Objectives (DQOs) for the environmental sampling activities. The HASP listed site hazards, safety procedures and emergency protocols. The DMP described the plan for the generation, management, and distribution of project data deliverables. The FSP, QAPP, HASP, and DMP provided the approved requirements and protocols to be followed for the RSE data collection, data management, and data analysis performed to develop this RSE report. Any deviations or modifications from the *RSE Work Plan* are described in the appropriate RSE report sections.

The RSE process followed applicable aspects of the USEPA DQO Process and *MARSSIM*, to verify that data collected during the RSE activities would be adequate to support reliable decision-making (USEPA, 2006). The USEPA DQO Process is a series of planning steps based on the scientific method for establishing criteria for data quality and developing survey designs. *MARSSIM* provides technical guidance on conducting radiation surveys and site investigations.

The USEPA DQO Process is a seven-step process[5] that was performed as part of the *RSE Work Plan* to identify RSE data objectives. The goal of the USEPA DQO Process is to minimize expenditures related to data collection by eliminating unnecessary, duplicate, or overly precise data and verifies that the type, quantity, and quality of environmental data used in decision making will be appropriate for the intended application. It provides a systematic procedure for defining the criteria that the survey design should satisfy. This approach provides a more effective survey design combined with a basis for judging the usability of the data collected (USEPA, 2006).

The USEPA DQO Process performed for the RSE is presented in the *RSE Work Plan*, Section 3, and identifies the purpose of the data collected as follows:

[5] (1) State the problem; (2) Identify the goals of the study; (3) Identify the information inputs; (4) Define the boundaries of the study; (5) Develop the analytical approach; (6) Specify the tolerance on decision errors; and (7) Optimize sampling design (USEPA, 2006).

1. Background reference area soil sampling, laboratory analysis, surface gamma surveying, and subsurface static gamma measurements to establish background analyte concentrations and gamma measurements, which will be used as the ILs, for the Site.

2. Site sampling (soil and sediment), laboratory analysis, surface gamma surveying, and subsurface static gamma measurements for comparison with ILs, to define the lateral and vertical extent of contamination at the Site to characterize the Site to support future Removal or Remedial Action evaluations.

The USEPA DQO Process was used in conjunction with *MARSSIM* guidance for RSE planning and data collection. Per *MARSSIM* guidance, "planning radiation surveys, using the USEPA DQO Process, can improve radiation survey effectiveness and efficiency, and thereby the defensibility of decisions" (USEPA, 2000).

The applicable aspects of *MARSSIM* incorporated into the RSE process include:

- Historical site assessment
- Determining RSE DQOs
- Selecting background reference areas
- Selecting radiation survey techniques
- Site preparation
- Quality control
- Health and safety
- Survey planning and design
- Baseline surface gamma surveys and subsurface static gamma measurements
- Field measurement methods and instrumentation
- Media sampling and preparation for laboratory analysis

The RSE process also used applicable aspects of *MARSSIM* for interpretation of the RSE results, including:

- Data quality assessment through statistical analysis
- Evaluation of the analytical results
- Quality assurance and quality control

Sections 3.2 and 3.3 summarize the preparation, field investigation methods, and procedures for data collection during the Site Clearance activities and other RSE activities. Activities

subsequent to the Site Clearance are described in detail in the *RSE Work Plan,* Section 4. Appendix A includes the radiological characterization report prepared by Environmental Restoration Group, Inc. (ERG), under contract to Stantec. Appendix B includes photographs of features at the Site and the surrounding area, Appendix C.1 includes soil/sediment sample field forms and Appendix C.2 includes borehole logs.

3.2 SUMMARY OF SITE CLEARANCE ACTIVITIES

The Site Clearance activities consisted of two tasks: a desktop study and field investigations. The desktop study was completed prior to field investigations, and the findings of the desktop study were used to guide field investigations. The Site Clearance activities are detailed in the *Site Clearance Data Report* and are described below.

3.2.1 Desktop Study

The desktop study included:

- Review of historical aerial photographs (USGS, 2016). Photographs were selected based on sufficient scale, quality, resolution, and whether the photograph met one or more of the following criteria:
    - Showed evidence of active mining or grading of the Site, or provided information on how the Site was developed or operated (e.g., haul roads and open pits).
    - Showed evidence of reclamation (e.g., soil covers).
    - Showed significant changes in ground cover compared to current photographs.
- Review of current aerial photographs for identification of buildings, homes and other structures, and potential haul roads within 0.25 miles of the Site.
- Review of topographic and geologic maps.
- Review of information related to surface water features and water wells on the Navajo Nation within a one-mile radius of the Site, provided by: (1) the Navajo Nation Department of Water Resources (NNDWR, 2016); and (2) ESRI Shapefiles data contained in the *2007 AUM Atlas*.
- Review of previous studies, information related to potential past mining, and reclamation activities.
- Identification of the predominant wind direction in the region of the Site.

Based on the list above, the following findings were identified during the desktop study:

- Historical photographs (USGS, 2016) for the Site were selected from 1949, 1952, 1955, 1967, 1997, and 2005 for comparison against a current 2017 image (Cooper, 2017). The selected historical photographs are shown in Figure 3-1a. Figure 3-1b compares the aerial photograph

from 1967 and a current image. It is difficult to determine differences between the two images. The 1967 historical photograph was presented because it provided the best resolution of what the Site looked like after mining occurred on-site.

- The current aerial photograph review confirmed that the Site was uninhabited but seven home-sites were located east of and within 0.25 mile of the Site, as shown in Figure 2-1. Numerous dirt roads were identified within 0.25 miles of the Site, refer to Figure 2-1. The road type (i.e., potential haul road or road unrelated to historical mining) was identified by the current aerial photograph review, historical document review, and visual identification during the Site Clearance field investigations (refer to Section 3.2.2.1).

- No water features were identified based on the review of information provided by the NNDWR and the *2007 AUM Atlas*.

- The predominant regional winds were from the east-northeast (refer to Section 2.2.3 and Figure 1-1).

Previous studies and information related to past mining are discussed in Sections 2.1.1 and 2.1.4.

3.2.2 Field Investigations

3.2.2.1 Site Mapping

The *Site Clearance Work Plan* specified that the following features at and near the Site, if present, should be mapped, marked, and/or their presence confirmed:

- Claim boundaries and the 100-ft buffers of the claim boundaries

- Roads, fences/gates, utilities: haul roads to a distance of 0.25 miles or to the intersection with the next major road, whichever is closer

- Structures, homes, buildings, livestock pens, etc.

- Surface water and water well locations: surface water channels that drain the Site to a distance of 0.25 miles away from the Site or to the confluence with a major drainage, whichever is closer; surface water features and water wells identified within a one-mile radius of the Site

- Topographic features

- Potential background reference areas

- Type of ground cover, including rock, soil, waste rock, etc.

- Physical hazards

Based on the list above, the following site features were mapped during field investigations:

- Claim boundaries – 100-ft buffers of the claim boundaries, as shown in Figure 2-8, were marked in the field with stakes and/or flagging and mapped with a global positioning system (GPS).

- Drainages – Three parallel patterned ephemeral drainages were mapped, as shown in Figure 2-8. The drainages drained from the Site to the northwest and terminated in the surrounding plains. One un-named drainage was mapped approximately 0.10 miles east of the Site that ran north into the surrounding plains where it terminated. The un-named drainage is shown in Appendix B-2 photograph number 6.

- Topographic features – The mapped area can be divided into two primary topographic areas: the ridge and the plains, as shown in Figure 2-5. The ridge trends northeast to southwest and had approximately 45 ft of relief. The sides of the ridge have relatively steep slopes, while the northern extent slopes gently into the surrounding plains. The ridge is shown in Appendix B-1 photograph number 1.

- Potential haul road – Two potential haul roads were mapped, as shown in Figures 2-1, 2-8, and Appendix B-2 photograph number 7. The potential haul roads ran from the home-sites to the northern surrounding plains in the northern portion of the Site.

- Berm – A berm was mapped, as shown in Figure 2-8. The berm was approximately 60 ft long, 2 ft high, and was placed to direct overland water flow to the northwest and away from the reclaimed area.

- Excavation – An excavation was mapped, as shown in Figure 2-8 and Appendix B-1 photograph numbers 4 and 5. A portion of the excavation area was coincident with the borrow area used for reclamation on-site (refer to Figure 2-2 and Section 2.1.4). The excavation is also shown as part of the earthworks in Figures 2-7a and 2-7b.

- Graded/Disturbed Reclaimed Area – A graded/disturbed reclaimed area was mapped, as shown in Figure 2-8 and Appendix B-1 photograph numbers 2 and 3. A portion of this area was coincident with the historical WP1, the historical rim strip, and area with anomalous radioactive measurements, as shown in Figure 2-2 (refer to Section 2.1.4). NAML assisted field personnel with identifying the general location of the rim stripped area in the field (refer to Section 2.2.7). The graded/disturbed reclaimed area is also shown as part of the earthworks in Figures 2-7a and 2-7b.

- Waste pile – One waste pile was mapped (Waste Pile 1), as shown in Figure 2-8. This waste pile was not coincident with the location of WP1 shown in the historical drawing overlay in Figure 2-2.

- Structures – The Site is currently uninhabited, but seven home-sites are located east of and within 0.25 miles of the Site, as shown in Figure 2-1.

- Ground cover – Ground cover and vegetation observed on-site are discussed in Sections 2.2.2.2 and 2.2.5, respectively.

Field personnel did not observe the "small pits" reported by Weston (2010).

In June 2018, the USEPA provided the Trust with a copy of a NNDWR database that was generated in 2018. The USEPA stated that there were discrepancies between the NNDWR water feature locations in the 2018 database and those provided in the 2016 NNDWR database used by the Trust. This information was provided after Site Characterization activities had occurred and was therefore not included in the RSE for the Site. Comparison of the 2018 NNDWR data

In addition to the Site mapping activity, the Trust took high-resolution aerial photographs and collected topographic data at the Site. The objective of the high-resolution aerial photography survey was to develop orthophotographs and topographic data of the Site to:

- Assist with identifying ground cover (e.g., soil versus bedrock)
- Assist with delineating historical mine features (e.g., haul roads, portals, and waste piles)
- Allow additional evaluation of areas that were inaccessible due to steep or unsafe terrain
- Provide site base maps (high resolution imagery and elevation data) that could be used to support future Removal or Remedial Action evaluations at the Site

Stantec proposed to perform aerial photography in order to provide an overview of the Site and identify features that could not otherwise be accomplished safely on foot. USEPA is not authorized to allow drones on sites it oversees: therefore, drone use was not an option. Although aerial photography was not included in the approved *Scope of Work* (MWH, 2016d), the Trustee notified the Agencies and obtained approval prior to commencement of the work. The Trust also consulted with Red Mesa Chapter officials and nearby residents and notified them of the aerial photography survey. On June 16, 2017, Cooper flew over the Site in a piloted fixed-wing aircraft and collected 3.5-centimeter digital color stereo photographs of the Site. Cooper provided the following data:

- Digital, high-resolution color orthophotograph imagery
- AutoCAD files (2-dimensional and 3-dimensional) that included elevation contours (refer to Figure 2-4) and plan features
- Elevation point files
- Triangular Irregular Network surface files

The site orthophotographs and supporting data files were used for data analysis, including estimating volumes of potentially mining-impacted material at the Site. They also were used as the base image for selected figures included in this RSE report, to the extent applicable.

3.2.2.2 Potential Background Reference Area Evaluation

The desktop study findings and field investigation observations were used to identify five potential background reference areas (BG-1 through BG-5) for the Site, as shown in Figure 3-2,

and described in Appendix D.1. BG-1 and BG-3 were selected as suitable background reference areas for the Site for the following reasons:

- BG-1 encompassed an area of 2,093 ft^2 (approximately 0.05 acres), was located 1,020 ft southeast of the claim boundary, and cross-wind and hydrologically cross-gradient from the Site. The thin soils and bedrock outcrops represented the majority of the Site within the claim boundary and 100-ft buffer, and were the same geologic unit, the Morrison Formation. Areas of BG-1 had weathered sandstone fragments and green sands at the surface which contain elevated NORM, refer to Appendix B-2 photograph number 8. The vegetation and ground cover at BG-1 were similar to the majority of the Site.

- BG-3 encompassed an area of 4,710 ft^2 (approximately 0.11 acres), was located 540 ft north of the claim boundary, and was cross-wind from the Site. Regionally, BG-3 was hydrologically downgradient from the Site but was locally topographically elevated and did not receive Site runoff. The thin soils and bedrock outcrops represented both the Summerville Formation and Quaternary deposits. The vegetation and ground cover at BG-3 were similar to the northern areas of the Site near the earthworks.

BG-4 and BG-5 were not selected as background reference areas for the Site for the reasons described in Appendix D.1. BG-2 is included in the RSE report for discussion purposes (refer to Sections 3.3.1.2 and 4.2), and was as follows: BG-2 encompassed an area of 2,031 ft^2 (approximately 0.05 acres), was located 630 ft south of the claim boundary, and was cross-wind and hydrologically upgradient from the Site; the thin soils and bedrock outcrops represented the majority of the Site within the claim boundary and 100-ft buffer, and were the same geologic unit, the Morrison Formation; the vegetation and ground cover at BG-2 were similar to the majority of the Site.

The potential background reference areas were selected based on *MARSSIM* guidance (i.e., similar geology and ground conditions, upwind of the Site, distance from the Site, etc.) to:

1. Represent undisturbed conditions at the Site (e.g., pre-mining conditions)

2. Provide a basis for establishing the ILs

The approved *RSE Work Plan* did not specify any minimum or maximum size criteria for these areas. Stantec does not view the size of the selected background reference areas as affecting the validity of the background concentrations. The sizes were based on professional judgment that the identified areas were generally representative of the Site.

The background reference areas were selected in areas outside of the Site that were considered to be representative of the general conditions observed at the Site. However, an important consideration is that the background gamma radiation and metals concentrations within soil and bedrock can be variable and often contain a wider range of concentrations than what was measured at the selected background reference areas. The ILs derived from the background reference areas provide a useful reference for comparison to the Site. However, it will be important to consider the variations in concentrations when conducting future site assessment work and/or to support future Removal or Remedial Action evaluations at the Site.

3.2.2.3 Biological Surveys

The objective of the biological surveys was to determine if identified species of concern or potential federal or Navajo Nation Threatened and Endangered (T&E) species and/or critical habitat are present on or near the Site. Biological (vegetation and wildlife) clearance was required at the Site before RSE activities could begin, to determine if the RSE activities could affect potential species of concern or federal or Navajo Nation listed T&E species and/or critical habitat. The Site biological evaluation reports, the *NNDFW Biological Resources Compliance Form*, and the US Fish and Wildlife Service (USFWS) consultation email are provided in Appendix E.

The Federal Endangered Species Act (ESA) of 1973, 16 U.S.C.§1531 et seq., requires that each Federal agency confer with the USFWS on any agency action that is likely to jeopardize the continued existence of any proposed T&E species or result in the destruction or adverse modification of critical habitat proposed to be designated for such species 16 U.S.C. §1536(a)(4). An "action area", as defined in the regulations implementing the ESA, includes "all areas to be affected directly or indirectly by the Federal action and not merely the immediate area involved in the action". 50 C.F.R §402.2.

The vegetation and wildlife surveys were conducted according to guidelines of the ESA and the NNDFW-Navajo Natural Heritage Program (NNHP), including the procedures set forth in the Biological Resource Land Use Clearance Policies and Procedures, RCS-44-08 (NNDFW, 2008), the Species Accounts document (NNHP, 2008), and the USFWS survey protocols and recommendations (USFWS, 1996).

Based on the results of the vegetation and wildlife surveys, the NNDFW's opinion was that the RSE Baseline Studies and Site Characterization Activities,

> "with applicable conditions, [were] in compliance with Tribal and Federal laws protecting biological resources including the Navajo Endangered Species and Environmental Policy Codes, US Endangered Species, Migratory Bird Treaty, Eagle Protection and National Environmental Policy Acts".

A copy of the *NNDFW Biological Resources Compliance Form* is included in Appendix E. In addition, after the Trust submitted the results of the biological survey, USEPA consulted with John Nystedt of the USFWS on August 26, 2016, and received an email response on August 29, 2016 stating:

> "Based on the information you [Stantec] provided [i.e., there is no habitat for any Federally listed species in the action area], we [the USFWS] believe no endangered or threatened species or critical habitat will be affected by the project; nor is this project likely to jeopardize the continued existence of any proposed species or adversely modify any proposed critical habitat" (Nystedt, 2016).

A copy of the Nystedt email is included in Appendix E. In light of the results of the biological surveys described below, the USFWS recommended no further action from the USFWS for the project unless the project or regulations change, or a new species is listed.

Vegetation Survey - In July 2016, Redente performed a summer vegetation survey as part of the Site Clearance field investigations. Complete details of the vegetation survey, including the *NNDFW Biological Resources Compliance Form*, are included in Appendix E and summarized below.

In preparation for the vegetation survey, Redente submitted data requests for species of concern to the NNDFW and NNHP, and for Federal T&E species, to the USFWS. The NNDFW-NNHP responded to MWH (now Stantec) by letter dated November 19, 2015. The letter provided a list of species of concern known to occur within the proximity of the Site and included their status as either Navajo Nation Endangered Species List (NNESL), and/or Federally Endangered, Federally Threatened, or Federal Candidate. The NNESL species were further classified as G2, G3, or G4[6]. A copy of this letter is included in Appendix E. A spring vegetation survey was not required for the Site because the species of concern data provided by NNDFW-NNHP did not include listed potential plant species that require a spring survey.

The NNDFW listed four T&E plant species that may occur on-site: Parish's alkali grass (G4), Rydberg's thistle (G4), alcove bog-orchid (G3), and alcove death camas (G3). The USFWS listed one T&E plant species that may occur on-site: Navajo sedge (threatened). Parish's alkali grass is a native annual grass that grows in a series of widely discontinuous populations ranging from southern California to eastern Arizona and western New Mexico in alkaline seeps, springs and seasonally wet areas and washes at elevations from 5,000 ft to 7,200 ft amsl. Rydberg's thistle is a native perennial forb that occurs in hanging gardens, seeps, and stream banks below hanging gardens at elevations from 3,297 ft to 6,946 ft amsl. Its distribution includes southern San Juan County along with Coconino and Apache Counties in Arizona. Alcove bog-orchid is a native perennial forb that grows in seeps, hanging gardens, and moist stream areas from the desert shrub to the Pinyon Juniper communities. This species is found in New Mexico, Utah, and Arizona at elevations from 4,003 ft to 7,201 ft amsl. Alcove death camas is a native perennial forb that grows in hanging gardens, seeps, and alcoves mostly on the Navajo Sandstone formation. This species is endemic to the Colorado Plateau in southern Utah and northern Arizona at elevations from 3,698 ft to 6,999 ft amsl. Navajo sedge is a native perennial grass-like plant that grows in seeps and hanging gardens primarily on sandstone cliffs and alcoves. Known populations occur at elevations from 4,600 ft to 7,200 ft amsl in San Juan County, Utah and northern Arizona.

Before beginning the Site vegetation surveys, Redente reviewed the ecologic and taxonomic information for the T&E species to understand ecological characteristics of the species, habitat requirements, and key taxonomic indicators for proper identification (Arizona Native Plant

[6] G2 classification includes endangered species or subspecies whose prospect of survival or recruitment are in jeopardy, G3 classification includes endangered species or subspecies whose prospect of survival or recruitment are likely to be in jeopardy in the foreseeable future, and G4 classification are "candidates" and includes those species or subspecies which may be endangered but for which sufficient information is lacking to support being listed (refer to Appendix E).

Society, 2000). Redente also reviewed currently accepted resource agency protocols and guidelines for conducting and reporting botanical inventories for special status plant species (USFWS, 1996). An experienced Redente botanist with local flora knowledge conducted the rare plant survey. The botanist walked transect lines on the Site with emphasis on areas with suitable habitat for the T&E species, specifically seeps and hanging gardens.

The Redente botanist did not identify any of the five T&E species at the Site based on observations he made during the on-site survey. The botanist concluded he did not identify any of the T&E species at the Site because the Site was not a likely habitat for the T&E species. The Site is primarily open shrubland with mixed grasses and sparsely vegetated rocky hills.

Wildlife Survey - In April and May 2016, Adkins performed a wildlife evaluation survey as part of the Site Clearance field investigations. The completed wildlife survey, including the *NNDFW Biological Resources Compliance Form*, are included in Appendix E and are summarized below.

Adkins performed the survey under a permit issued by NNDFW for the purpose of assessing habitat potential for ESA-listed or NNESL animal species. Adkins biologists with experience identifying local wildlife species led the field survey, which consisted of walking transects 10 ft apart throughout the Site, including a 100-ft buffer beyond the claim boundary. The surrounding areas were visually inspected with binoculars for nests, raptors, or signs of raptor use.

The wildlife evaluation was performed for species listed as NNESL, Federally Endangered, Federally Threatened, or Federal Candidate, and species protected under the Migratory Bird Treaty Act (MBTA) that have the potential to occur on-site. Prior to the start of the wildlife survey, Adkins submitted data requests to USFWS and NNDFW for animal species listed under the ESA. The NNESL species were further classified as G2, G3, or G4. The USFWS included six ESA-species with the potential to occur in the area of the Site; one bird (western yellow-billed cuckoo), two fish (roundtail chub and Zuni bluehead sucker), two mammals (black-footed ferret and gray wolf), and one reptile (northern Mexican gartersnake). The NNDFW included: five birds (mountain plover [G4], golden eagle [G3], ferruginous hawk [G3], southwestern willow flycatcher [G2], and western burrowing owl [G4]), and one fish (Colorado pikeminnow [G2]). All species on the USFWS list and all species from the NNDFW list, with the exception of the golden eagle, ferruginous hawk, and western burrowing owl were eliminated from further evaluation because there was no potential for those species to occur on the Site due to lack of suitable habitat. Based on the preparation data, three birds remained as species of concern warranting further analysis during the Site survey: golden eagle, ferruginous hawk, and western burrowing owl.

In addition, Adkins reviewed species protected under the MBTA that have the potential to occur in the area of the Site. The MBTA review resulted in the potential for identification of 16 bird species in addition to those listed above, known as "Priority Birds of Conservation Concern with the Potential to Occur"[7] in the areas of the Site: black-throated sparrow, Brewer's sparrow, gray vireo, loggerhead shrike, mountain bluebird, mourning dove, sage sparrow, sage thrasher,

[7] USFWS, 2008. Birds of Conservation Concern 2008. United States Department of Interior, Fish and Wildlife Service, Division of Migratory Bird Management, Arlington, Virginia. 85 pp.

scaled quail, Swainson's hawk, vesper sparrow, bald eagle, Bendire's thrasher, pinyon jay, prairie falcon, and American peregrine falcon. These 16 MBTA bird species were added for further analysis during the survey for effects to potential habitat.

The wildlife survey revealed three NNESL species of concern that has the potential to occur within or near the Site based on habitat suitability or actual recorded observation: golden eagle, ferruginous hawk, and western burrowing owl. Based on these findings Adkins recommended the use of best management practices to protect potential habitat during RSE activities, specifically: (1) confining equipment travel to within the boundaries of the Site; (2) minimizing travel corridors as much as possible; (3) limiting truck and equipment travel within the Site when surfaces are wet and soil may become deeply rutted; and (4) using previously disturbed areas for travel when possible. The recommended best management practices were followed to protect potential habitat during RSE activities.

3.2.2.4 Cultural Resource Survey

In March and April 2016, Dinétahdóó conducted a cultural resource survey as part of the Site Clearance field investigations. Navajo Nation Historic Preservation Department (NNHPD) issued a Class B permit to Dinétahdóó on behalf of the Trust to conduct the cultural resource survey. Following the cultural resource survey, the NNHPD issued a Cultural Resources Compliance Form that included a "Notification to Proceed" with RSE field work. A copy of the Cultural Resources Compliance Form is included in Appendix E. According to NNHPD, this form is the equivalent of a "permit" to conduct the work (NNHPD, 2018[8]).

The survey included the areas within the claim boundary and the 100-ft claim boundary buffer, as shown in Figure 2-8. The survey identified one archaeological site. For confidentiality reasons, details regarding the archaeological site are not provided herein. NNHPD can be contacted for additional information. NNHPD contact information is located on the *Cultural Resource Compliance Form* included in Appendix E.

Based on the survey findings, Dinétahdóó recommended during RSE activities that the boundaries of the archaeological site be flagged and that an archaeologist monitor all ground disturbing activities, including soil sampling, within 50 ft of the archaeological boundaries. Dinétahdóó also stipulated that RSE activities be halted at any time if cultural resources were encountered. Stantec complied with Dinétahdóó's recommendations while conducting RSE activities on–site.

Dinétahdóó also escorted field personnel during: (1) the collection of subsurface soil samples at the background reference areas (refer to Section 3.3.1.1); and (2) during Site Characterization borehole subsurface soil/sediment sample collection in locations outside the 100-ft buffer (refer to Section 3.3.2.2). The Trust and NNHPD agreed that Dinétahdóó's archeologist would be present because the subsurface sample locations were outside of the area originally surveyed during the Site Clearance cultural resource survey.

[8] Call with Sadie Hoskie, Tamara Billie of NNHPD, and Linda Reeves, June 8, 2018.

3.3 SUMMARY OF REMOVAL SITE EVALUATION ACTIVITIES

The RSE activities consisted of two additional tasks following the Site Clearance Activities: Baseline Studies and Site Characterization activities. The Baseline Studies included a Background Reference Area Study, Site gamma survey, and Gamma Correlation Study. The results of the Baseline Studies were used to plan and prepare the Site Characterization field investigations, which included surface and subsurface soil and sediment sampling. Results of the RSE activities are presented in Section 4.0. Baseline Studies and Site Characterization activities are summarized in Sections 3.3.1 and 3.3.2, respectively.

3.3.1 Baseline Studies Activities

3.3.1.1 Background Reference Area Study

The Background Reference Area Study activities were completed at the background reference areas selected for the Site. Refer to Section 3.2.2.2 for an explanation of the selection of the background reference areas for the Site. The Background Reference Area Study included a surface gamma survey, static surface and subsurface gamma measurements, and surface and subsurface soil sampling. The soil sample locations in the background reference areas were initially selected using a triangular grid, set on a random origin. Where possible, samples were collected at the center points of the triangles. However, in some instances, the actual sample locations had to be moved in the field if sampling was not possible (e.g., the location consisted of exposed bedrock or there was a large bush blocking access). In these cases, the closest accessible location was selected instead.

The background reference areas were selected based on a variety of factors, including *MARSSIM* criteria, which indicated whether the areas were representative of unmined locations, regardless of the sizes of the area. These factors are described in this RSE report and accompanying appendices. The objectives of the background reference area study were to measure gamma radiation levels emitted by naturally occurring, undisturbed uranium-series radionuclides, and concentrations of other naturally occurring constituents. The results were used to establish background gamma levels and concentrations of Ra-226 and specific metals (uranium, arsenic, molybdenum, selenium, and vanadium). The soil sampling locations at the background reference areas are presented in Figure 3-3. Field personnel performed the Background Reference Area Study in accordance with the *RSE Work Plan,* Sections 4.2, 4.4, and 4.5.

The surface gamma surveys at BG-1 and BG-2 were completed in April 2016 and at BG-3 in June 2017. ERG performed the surface gamma surveys using Ludlum Model 44-10 2-inch by 2-inch sodium iodide (NaI) high-energy gamma detectors (the detectors). Each detector was coupled to a Ludlum Model 2221 ratemeter/scaler that in turn was coupled to a Trimble ProXRT GPS unit with a NOMAD 900 series datalogger. The detector tagged individual gamma measurements with associated geopositions recorded using the Universal Transverse Mercator Zone 12 North coordinate system. ERG matched and calibrated the detector to a National

Institute of Standards and Technology-traceable cesium-137 check source, and function-checked the equipment prior-to and after each workday. ERG performed the surveys by walking the background reference areas with the detector carried by hand, along transects that varied depending on encountered topography. The gamma measurements were collected with the height of the detector varying from 1 ft to 2 ft above ground surface (ags) with an average height of 1.5 ft ags to accommodate vegetation, rocks, or other surface features. If field personnel encountered an immovable obstruction (e.g., a tree) during the surface gamma surveys they went around the obstruction. Subsequent to each workday, ERG downloaded the gamma measurements to a computer and secure server.

The same equipment used for the surface gamma surveys was also used to collect static one-minute gamma measurements at the ground surface and down-hole (subsurface) at borehole locations S220-SCX-001 (BG-2) and S220-BG3-011 (BG-3). Surface and/or subsurface static gamma measurements were not collected in the attempted borehole at BG-1 (S220-SCX-002) due to detector malfunction. Refer to Appendix C.2 for borehole logs. Static gamma measurements were categorized as surface measurements where they were collected at ground surface (0.0 ft) and as subsurface measurements where depths were below ground surface due to the influence of downhole geometric effects on subsurface static gamma measurements (refer to Section 4.1). Gamma measurements were collected according to the methods described in the *RSE Work Plan,* Section 4.2 and Appendix E.

Soil samples collected as part of the background study are detailed in Table 3-1 and sample locations are shown in Figure 3-3. Soil samples were categorized as surface samples where sample depths ranged from 0.0 to 0.5 ft bgs and as subsurface samples where sample depths were greater than 0.5 ft bgs. Field personnel collected the following samples from the background reference areas:

- BG-1 – In October 2016 and March 2017, 16 surface soil grab samples were collected from 16 locations. A borehole could not be advanced beyond 0.5 ft at S220-SCX-002 due to refusal on bedrock, so no subsurface samples were collected at BG-1.

- BG-2 – In October 2016, 11 surface soil grab samples were collected from 11 locations and two subsurface soil grab sample was collected from borehole S220-SCX-001.

- BG-3 – In August 2017, 11 surface sediment grab samples were collected from 11 locations. A borehole could not be advanced beyond 0.5 ft at S220-BG3-011 due to refusal on bedrock, so no subsurface samples were collected at BG-3.

The lack of subsurface soil samples from BG-1 and BG-3 will not affect the derivation of Ra-226 or metal ILs because the Ra-226 and metals ILs (i.e., surface and subsurface) were based on surface soil samples (refer to Section 4.1).

Samples were shipped to a USEPA approved laboratory, ALS Environmental Laboratories in Fort Collins, Colorado for analysis. Samples were collected according to the methods described in the *RSE Work Plan,* Section 3.8.1.1. The results of the surface gamma survey, static surface and subsurface gamma measurements, and surface and subsurface soil sample analytical results

provided background reference data to guide the Site Characterization surface and subsurface soil/sediment sampling (refer to Section 3.3.2). The Background Reference Area Study results are presented in Section 4.1. The ERG survey report in Appendix A provides further details on the gamma surveys. Field forms, including borehole logs, are provided in Appendix C.1 and C.2.

3.3.1.2 Site Gamma Radiation Surveys

Baseline Studies activities included a surface gamma survey of the Site in accordance with the *RSE Work Plan,* Section 4.2 and Appendix E. For the portion of the potential haul road directly north of the Site the approximate centerline was surveyed, but the shoulders were not and for the road that runs east of the Site the shoulders were surveyed, but the centerline was not. These were due to miscommunication with the field personnel and are identified as potential data gaps in Section 4.8.

The surface gamma survey was used to evaluate the extent of potential mining-related impacts or areas containing elevated radionuclides associated with uranium mineralization. In addition, surface and subsurface soil and sediment samples were also collected and used to evaluate mining-related impacts (refer to Section 3.3.2).

In October 2016 and September 2017, the surface gamma survey was performed using the methods and equipment as described in Section 3.3.1.1. The surface gamma survey included the claim area, a 100-ft buffer around the claim area, and roads and drainages out to approximately 0.25 miles from the Site. The *RSE Work Plan* specified that the surface gamma survey would be an iterative process where the surface gamma survey would be extended laterally until gamma measurements appeared to be within background levels. Subsequent to each workday, the gamma measurements were evaluated by ERG and Stantec, and compared to the background reference areas to determine if additional surface gamma surveying was needed.

The full areal extent of the surface gamma survey is referred to as the Survey Area, as shown in Figure 3-4. The Survey Area was 15.4 acres and was subdivided into two separate survey areas, as shown in Figure 3-4, based on *MARSSIM* criteria, including different geologic conditions on-site. Survey Area A is within the Morrison Formation (based on BG-1), and Survey Area B is within the Summerville Formation and Quaternary deposits (based on BG-3).

BG-1 was selected over BG-2 to represent the areas of the Site within the Morrison Formation (i.e., outcrops and thin soil cover within the 100-ft buffer where mining-related disturbance at the Site occurred). However, BG-2 does provide a valuable comparison to BG-1 regarding the variation in gamma measurements that may occur in areas that are background and the heterogeneity that is present within the Morrison Formation. Also, BG-2 better represented the southern portion of the claim area where little to no disturbance occurred, and where there was more soil cover. Therefore, BG-2 is included in the RSE report for discussion purposes (refer to Section 4.2). Gamma survey measurements, subsurface static gamma measurements, and soil sample results collected from BG-1 and BG-3 were used for the remainder of the RSE for the Site (refer to Section 4.1).

It was necessary to subdivide the Survey Area based on geologic conditions and present the findings in Section 4.0 based on the subdivision, because geologic formations can have different geochemical compositions (i.e., gamma levels and concentrations of Ra-226, uranium, arsenic, molybdenum, selenium, and vanadium). The surface gamma survey results are presented in Section 4.2. The ERG survey report in Appendix A provides further detailed information on the surface gamma survey.

3.3.1.3 Gamma Correlation Study

Baseline Studies activities included a Gamma Correlation Study in accordance with the *RSE Work Plan,* Section 4.3. The objectives of the Gamma Correlation Study were to determine correlations between the following constituents to use as screening tools for site assessments:

- Gamma measurements (in cpm) and concentrations of Ra-226 in surface soils (in picocuries per gram [pCi/g])
- Gamma measurements (in cpm) and exposure rates (in microRoentgens per hour [µR/hr])

Two regression analyses were conducted for these correlations. The first regression analysis was performed using co-located high-density surface gamma measurements and laboratory concentrations of Ra-226 in surface soil/sediment to develop a correlation equation (refer to Section 4.2.2). The correlation equation allows for Ra-226 concentrations in soil and sediment to be estimated (predicted) based on gamma measurements in the field.

This correlation equation was not used in the field to estimate Ra-226 concentrations or to evaluate the extent of Ra-226 concentrations. The correlation was used to develop a site-specific prediction for Ra-226 concentrations from the actual gamma survey data, as presented in Section 4.2.2. The correlation can be used as a site-specific field screening tool during site assessments, using the same gamma survey methods as in this RSE (e.g., walkover gamma survey) and based on site-specific conditions. The data related to the correlations are provided in Appendices A and C.

The second regression analysis was performed using co-located static one-minute gamma measurements and exposure rates to develop an exposure-rate correlation equation. Exposure rates can be predicted, based on gamma measurements, using the developed exposure-rate correlation equation. The exposure rate correlation also provides a standard by which future gamma measurements can be compared to previous gamma measurements, if those previous gamma measurements were also correlated with exposure. In addition, exposure rates can be used to provide an estimate of gamma radiation levels when an exposure meter is used as a health and safety tool for field personnel working on-site. The exposure rate correlation was not used for Site Characterization. Because the exposure rates are not part of the data analysis for the RSE report, a summary of the exposure rate correlation is not presented in this report. Appendix A provides a discussion of the correlations and the regression equations for both correlations.

In October 2016, field personnel identified five areas for the Gamma Correlation Study, as shown in Figure 3-5, by considering the results of the Site surface gamma survey (described in Section 3.3.1.2), field conditions (e.g., suitable terrain), and feasibility of sampling. To minimize variability when determining a correlation between gamma measurements (in cpm) and concentrations of Ra-226 in soil/sediment, the study area soil/sediment must: (1) represent a specific gamma measurement within the range of gamma measurements collected at the Survey Area; and (2) be as homogenous as possible with respect to soil/sediment type, and gamma measurement within the correlation area. At each area, field personnel completed a high-density surface gamma survey (intended to cover 100 percent of the survey area) and collected one five-point composite surface soil/sediment sample per area (refer to Table 3-1). Field personnel made a field modification from the *RSE Work Plan* by adjusting the size of the 900 ft^2 area smaller at three of the Gamma Correlation Study locations and larger at two of the Gamma Correlation Study locations, to minimize the variability of gamma measurements observed. The area used for the Gamma Correlation Study is shown in Figure 3-5, where the box shown at the five study locations represents a 900 ft^2 area in comparison to the actual area covered for the study, as shown by the extent of the gamma measurements within each area.

Field personnel collected, logged, classified, packaged, and shipped the samples in accordance with the *RSE Work Plan,* Sections 4.4, 4.9, 4.11, and Appendix E. Soil/sediment samples were collected for analyses of Ra-226 and isotopic thorium, as described in the *RSE Work Plan,* Section 3.4.1.

The objectives of the thorium analyses were for site characterization and evaluation of potential effects of thorium on the correlation. The data can be used to assess the potential effects of thorium-232 (Th-232) series radioisotopes on the correlation of gamma measurements to concentrations of Ra-226 in surface soils (i.e., if gamma-emitting radioisotopes in the Th-232 series, such as actinium-228, lead-212, and thallium-208, are impacting gamma measurements at the Site), as discussed in Section 4.2.2. Uranium, radium, and thorium occur in three natural decay series (uranium-238 [U-238], Th-232, and U-235), each of which include significant gamma emitters (USEPA, 2007b). Therefore, in order to develop a correlation between gamma radiation and Ra-226 concentrations, the gamma radiation from each significant decay series present at the Site, may need to be taken into account. Typically, only U-238, and sometimes Th-232, are present in significant quantities. The contribution from the U-235 decay series to gamma measurements can be excluded because U-235 is only approximately 0.72 percent of the total uranium concentration. If the Th-232 decay series is present in significant quantities, it should be accounted for in the correlation to accurately predict Ra-226 concentrations based on all significant sources of gamma radiation.

3.3.1.4 Secular Equilibrium

The Gamma Correlation Study soil/sediment samples (refer to Section 3.3.1.3) were also analyzed for thorium-230 (Th-230), in accordance with the *RSE Work Plan,* Section 3.4.1. The activities of Th-230 and Ra-226 can be compared to evaluate the status of secular equilibrium within the U-238 decay series (USEPA, 2007b). The U-238 decay series is in secular equilibrium

when the radioactivity of a parent radionuclide (e.g., U-238) is equal to its decay products (refer to Appendix A). If the U-238 decay series is out of secular equilibrium, the quantities of the daughter products become depleted. This could be considered for potential site assessments (e.g., when evaluating the contribution of the daughter products to the total risk related to U-238 during a human health and/or ecological risk assessment). As part of the RSE, the secular equilibrium evaluation was a general indicator (e.g., screening level assessment) of the status of equilibrium at the sites. It was not used to characterize the extent of constituents of potential concern (COPCs) at the Site. The secular equilibrium evaluation is discussed here only because Th-230 was included in the isotopic thorium analysis.

3.3.2 Site Characterization Activities and Assessment

3.3.2.1 Surface Soil and Sediment Sampling

Site Characterization activities included surface soil and sediment sampling and associated laboratory analyses. The soil and sediment surface sampling locations within the Survey Area were selected based on professional judgment (i.e., non-randomly) to evaluate concentrations of Ra-226 and metals in relation to the surface gamma survey measurements and site features (e.g., historical mining features and geologic features). Based on the surface gamma survey results and site features, a limited number of samples were collected and analyzed where the gamma survey measurements were within background levels, mining and or exploration-related features were not present, and no ground disturbance was observed. The results were compared to the site-specific ILs and published regional concentrations to support the overall evaluation of potential mining impacts (refer to Section 4.3). Soil/sediment samples were categorized as surface samples where sample depths ranged from 0.0 to 0.5 ft bgs and as subsurface samples where sample depths were greater than 0.5 ft bgs. Samples collected in drainages were classified as sediment samples.

In April and June 2016, samples were collected from the locations shown in Figure 3-6a and are summarized in Table 3-1. Sample locations and the locations of mining-related features are shown in Figure 3-6b. The numbers of surface samples collected within specific mine features are listed in Table 3-2. Thirty surface soil/sediment grab samples were collected from 30 locations in the Survey Area (10 from Survey Area A and 20 from Survey Area B).

Field personnel collected, logged, classified, packaged, and shipped the samples in accordance with the *RSE Work Plan,* Sections 4.4, 4.9, 4.11, and Appendix E. Samples were shipped to ALS Environmental Laboratories in Fort Collins, Colorado for analysis of: Ra-226, uranium, arsenic, molybdenum, selenium, and vanadium, as described in the *RSE Work Plan,* Section 4.13.1. The surface soil and sediment analytical results are presented in Section 4.3. Field forms are provided in Appendix C.1 and the laboratory analytical data, data validation reports, and Data Usability Report for the analyses are provided in Appendix F.

3.3.2.2 Subsurface Soil and Sediment Sampling

Site Characterization activities included subsurface soil and sediment sampling and associated laboratory analyses. Similar to the surface soil/sediment sampling discussed in Section 3.3.2.1, subsurface sampling locations were selected based on professional judgment (i.e., non-randomly) to evaluate concentrations of Ra-226 and metals in relation to the surface gamma survey measurements and site features (e.g., historical mining features and geologic features). Grab samples were collected with the intent to characterize specific intervals of interest (e.g., material within zones with elevated static gamma measurements). Composite samples were collected to provide a screening level assessment across an interval (e.g., sediment collected in a drainage downgradient from the Site). The usefulness of a composite sample may be limited when the sample is collected over an interval with varying soil or rock types or is excessively long (e.g., greater than 5 ft), which tends to dilute the constituent concentrations or sample heterogeneity. Surface and subsurface static gamma measurements were collected in the borehole using the same equipment as described in Section 3.3.1.1. Static gamma measurements were collected by holding the detector in the borehole for a one-minute integrated count and are not comparable to the surface gamma survey measurements, which were collected as a walkover survey.

Subsurface samples were collected by advancing subsurface boreholes to a desired sample depth using either a 3-inch diameter hand auger or a Geoprobe™ 8140LC rotary sonic drilling rig (refer to Appendix C.2). Field personnel advanced the hand auger boreholes to the desired sample depth manually, and the sonic drilling rig advanced the boreholes to the desired sample depth. The sonic drilling rig was equipped with a 4-inch diameter sonic core barrel that used cutting rotation and vibration to advance the boreholes. The sonic drilling method is ideal for use in rocky soils to obtain continuous samples in materials that are difficult to sample using other drilling methods (ASTM, 2016) and it recovers a continuous and relatively undisturbed core sample for review and analysis that are representative of the lithological column at that borehole location (refer to Appendix C.2).

Twenty-one boreholes were advanced in the Survey Area (eight in Survey Area A and 13 in Survey Area B). Hand auger boreholes were drilled through the unconsolidated deposits until refusal on rock, bedrock, or hard surface. Sonic drill boreholes were drilled until competent bedrock was observed. Borehole depths ranged from 0.5 to 23.0 ft bgs, and the depth of unconsolidated deposits to bedrock in boreholes ranged from 0.5 to 21.0 ft bgs. The boreholes were advanced through variable amounts of sand, silt, gravel, sandstone, weathered sandstone, conglomerate, and shale (refer to Appendix C.2 for borehole information). A photograph of the Geoprobe™ 8140LC rotary sonic drilling rig, preparing to collect samples, is shown in Appendix B-1 photograph number 3.

In April and June 2016, samples were collected from the locations shown in Figure 3-6a and are summarized in Table 3-1. Sample locations and the locations of mining-related features are shown in Figure 3-6b. The numbers of subsurface samples collected within specific mine features are listed in Table 3-2. Thirty subsurface samples (28 soil/sediment and two soil/bedrock) were

collected from 19 borehole locations in the Survey Area (multiple subsurface samples were collected from multiple boreholes). Ten subsurface samples were collected from Survey Area A and 20 from Survey Area B. Subsurface samples were not collected within the berm or along the potential haul roads. Additional characterization of these features may be considered during future studies at the Site.

Field personnel logged, classified, packaged, and shipped the samples in accordance with the *RSE Work Plan,* Sections 4.5, 4.9, 4.11, and Appendix E. Samples were shipped to ALS Environmental Laboratories in Fort Collins, Colorado for analysis of Ra-226, uranium, arsenic, molybdenum, selenium, and vanadium, as described in the *RSE Work Plan,* Section 4.13.1. The subsurface analytical results are presented in Section 4.3. Field forms, including borehole logs showing static gamma measurements and Ra-226 analytical results, are provided in Appendix C.2. The laboratory analytical data, data validation reports, and Data Usability Report for the analysis are provided in Appendix F.

3.3.3 Identification of TENORM Areas

Areas at the Site where TENORM is present were identified using multiple lines of evidence including:

1. Historical Data Review
    a. Aerial photographs
    b. USAEC records
    c. Reclamation records
    d. Other documents relevant to the Site, including those in the *2007 AUM Atlas*
    e. Interviews with residents living closest to the Site (for those sites where residents were available for interview)
    f. Consultation and site visits with NAML staff to identify reclamation features (for those sites reclaimed by NAML)
2. Geology/Geomorphology
    a. Hydrology/transport pathways with drainage delineation
    b. Site-specific geologic mapping including areas of mineralization
    c. Topography
3. Disturbance Mapping
    a. Exploration

b. Mining

c. Reclamation

4. Site Characterization

a. Surface gamma surveys and subsurface static gamma measurements

b. Soil/sediment sampling and analysis

Any areas where TENORM was not observed are considered to contain NORM, because soil and/or rock at the Site contain some amount of natural uranium and its daughter products. This area was mined because of the high levels of naturally occurring uranium ore. The areas containing NORM and/or TENORM are presented in Section 4.6. The volume of TENORM is presented in Section 4.7. The areas containing NORM and/or TENORM, along with additional findings of the RSE report, are identified to support future Removal or Remedial Action evaluations at the Site.

3.4 DATA MANAGEMENT AND DATA QUALITY ASSESSMENT

This section summarizes the data management and data quality assessment activities performed for the RSE.

3.4.1 Data Management

The DMP included in the *RSE Work Plan* describes the plan for the generation, validation, and distribution of project data deliverables. Successful data management comes from coordinating data collection, quality control, storage, access, reduction, evaluation, and reporting. A summary of the data management activities performed as part of the RSE process included:

- **Database** – Field-collected and laboratory analytical RSE data were stored in an Oracle SQL relational database, which increased data handling efficiency by using previously developed data entry, validation, and reporting tools. The Oracle SQL database was also used to export project data to a tabular format that can be used in a spreadsheet (e.g., Excel) and to the USEPA Scribe database format.

- **Scribe** – The Stantec Data Manager/Data Administrator was responsible for meeting the project data transfer requirements from the Oracle SQL database to Scribe, which is a software tool developed by the USEPA's Environmental Response Team to assist in the process of managing environmental data. Stantec maintained an Oracle SQL database and exported data from the Oracle SQL database to a Scribe compatible format following completion of each field investigation phase. Custom data queries and "crosswalk" export routines were built in Oracle SQL, to facilitate data export to the Scribe database format with the required frequency.

- **Geographic Information System (GIS)** – Spatial data collected during the RSE (e.g., sample locations and gamma measurements) were stored in a dedicated File Geodatabase for use in the project GIS. The geodatabase format enforces data integrity, version control, file size

compression, and ease of sharing to preserve GIS output quality. Periodic geodatabase backups were performed to identify accidentally deleted or otherwise corrupt information that were then repaired or recovered, if applicable.

3.4.2 Data Quality Assessment

The QAPP, included in the *RSE Work Plan*, Appendix B, was followed for RSE data quality assessment, where the QAPP presents QA/QC requirements designed to meet the RSE DQOs. Data quality refers to the level of reliability associated with a particular data set or data point. The Data Usability Report included in Appendix F.1 provides a summary of the data quality assessment activities and qualified data for the RSE. A summary of findings, from the data quality assessment, are included below.

- **Data Verification** – The data were verified to confirm that standard operating procedures (SOPs) specified in the *RSE Work Plan* and *FSP* were followed and that the measurement systems were performed in accordance with the criteria specified in the QAPP. Any deviations or modifications from the *RSE Work Plan* are described in the appropriate RSE report sections. The USEPA definition (USEPA, 2002b) for data verification is provided in the glossary.

- **Data Validation** – The data were validated to confirm that the results of data collection activities support the objectives of the RSE as documented in the QAPP. The data quality assessment process was then applied using the validated data and determined that the quality of the data satisfies the intended use. The USEPA definition (USEPA, 2002b) for data validation is provided in the glossary. A copy of the Data Usability Report is included in Appendix F.1 and a summary of the validation results is presented below:

    - **Precision** Based on the matrix spike/matrix spike duplicate (MS/MSD) sample, laboratory control sample/laboratory control sample duplicate (LCS/LCSD) sample, laboratory duplicate sample, and field duplicate results, the data are precise as qualified.

    - **Accuracy** Based on the initial calibration (ICAL), initial calibration verification (ICV), continuing calibration verification (CCV), MS/MSD, and LCS, the data are accurate as qualified.

    - **Representativeness** Based on the results of the sample preservation and holding time evaluation, the method and initial/continuing calibration blank (ICB/CCB) sample results, the field duplicate sample evaluation, and the reporting limit evaluation, the data are considered representative of the Site as reported.

    - **Completeness** All media and QC sample results were valid and collected as scheduled (i.e., as planned in the *RSE Work Plan*); therefore, completeness for these is 100 percent.

    - **Comparability** Standard methods of sample collection and standard units of measure were used during this project. The analyses performed by the laboratory were in accordance with current USEPA methodology and the QAPP.

Based on the results of the data validation, all data are considered valid as qualified.

4.0 FINDINGS AND DISCUSSION

4.1 BACKGROUND REFERENCE AREA STUDY RESULTS AND CALCULATION OF INVESTIGATION LEVELS

The results of the background reference area surface gamma survey are shown in Figures 4-1a through 4-1c with sample locations in the background reference areas shown for BG-1 and BG-3 on Figures 4-1b and 4-1c, respectively. The surface gamma surveys in BG-1 and BG-2 did not cover the areal extent of the sample locations. Sample locations were potentially stepped-out due to the presence of an obstruction (e.g., rock or bush). Analytical results of the samples collected from BG-1, BG-2, and BG-3 are summarized in Table 4-1. As previously discussed in Section 3.3.1.2, the Site was subdivided into two separate Survey Areas based on the geologic formations on-site. BG-1 and BG-2 were located within the Morrison Formation and overlying soil (Survey Area A). However, BG-1 was selected as most representative of background conditions for Survey Area A (refer to Section 3.2.2.2). BG -3 was selected to represent background conditions for the Summerville Formation and Quaternary deposits (Survey Area B). The gamma measurements and surface soil sample analytical results collected from BG-1 and BG-3 were evaluated statistically to calculate ILs (refer to Appendix D.2) for each corresponding Survey Area (i.e., Survey Area A and Survey Area B, respectively).

Statistical evaluation of the gamma measurements and soil sample analytical results included identifying potential outlier values, interpreting boxplots and probability plots, comparing group means between the background reference areas and the respective Survey Area data, and calculating descriptive statistics for each of the background reference areas. The descriptive statistics included the 95 percent upper confidence limit (UCL) on the mean gamma measurements and Ra-226/metals concentrations, and the 95-95 upper tolerance limits (UTLs). The data were analyzed using R statistical programming packages and ProUCL 5.1 software (USEPA, 2016).

The DQOs presented in the RSE Work Plan indicate that the ILs would be developed using the 95 percent UCL on the mean of the background sample results. However, the 95-95 UTL was used as the basis for the ILs instead because it better reflects the natural variability in the background data and lends itself to single-point comparisons to the Survey Area data. This was a change from the *RSE Work Plan*, as agreed upon with the Agencies prior to the change. The UTL represents a 95 percent UCL for the 95th percentile of a background dataset whereby Survey Area results above this value are not considered representative of background conditions. The UTL is a statistical parameter for the entire population of the variable, whereas the actual results are from a sample of the population. UTLs were calculated in accordance with USEPA's *ProUCL 5.1 Technical Guidance,* Sections 3.4 and 5.3.3 (USEPA, 2015). Appendix D.2 presents a comprehensive discussion on the derivation of the ILs for the Site, which are presented below. The *RSE Work Plan* also stated that gamma radiation measurements from the background surface and subsurface soil would be combined to develop the IL for surface gamma radiation

at the Site. However, the surface gamma radiation ILs were instead developed from the surface gamma survey data only. The Agencies have commented that this should be noted as a deviation from the *RSE Work Plan*. The subsurface static gamma measurements were excluded from the derivation of the surface gamma IL for two reasons: (1) they were collected using a different method (static one-minute measurements versus a walkover gamma survey); and (2) because of the downhole geometric effects that influence subsurface static gamma measurements (refer to the discussion of geometric effects below).

The ILs for Survey Area A were established using statistical analysis of background data collected from BG-1 (refer to Figures 3-3 and 3-4), and are as follows:

- Arsenic – 3.83 milligrams per kilogram (mg/kg)
- Molybdenum – 0.332 mg/kg
- Selenium – an IL for selenium was not identified because selenium sample results in BG-1 were all non-detect
- Uranium – 6.36 mg/kg
- Vanadium – 16.0 mg/kg
- Ra-226 – 11.8 pCi/g
- Surface gamma measurements 21,576 cpm

The ILs for Survey Area B were established using statistical analysis of background data collected from BG-3 (refer to Figures 3-3 and 3-4), and are as follows:

- Arsenic – 1.50 mg/kg
- Molybdenum – 0.367 mg/kg
- Selenium – an IL for selenium was not identified because selenium sample results in BG-3 were all non-detect
- Uranium – 1.13 mg/kg
- Vanadium – 12.6 mg/kg
- Ra-226 – 1.77 pCi/g
- Surface gamma measurements 10,677 cpm

It is important to note that comparisons to the IL (i.e., 1.5 times the IL) are provided for context, and evaluations of: (1) areas of the Site; (2) samples or; (3) TENORM that exceed the ILs, which are based on the statistically derived IL values.

Both BG-1 and BG-2 are within the Salt Wash Member of the Morrison Formation; however, statistical analyses of the BG-1 and BG-2 data provided dissimilar results (refer to Tables D.1-1 and D.1-2 in Appendix D.1 and to Appendix D.2). The dissimilar results showed that Ra-226, metals, and surface gamma UTL values within BG-1 are greater than those from BG-2. Field personnel noted the geology at BG-1 was possibly heterogeneous, and elevated gamma measurements and elevated concentrations in some of the metals analytical results at BG-1 support this observation (refer to the box plots and probability plots in Appendix D.2). The elevated measurements in BG-1 (refer to Figure 4-1b) were generally associated with an area of green sands. The green sands were also observed at other undisturbed areas near the Site and another AUM being investigated by the Trust (i.e., NA-0928) in an undisturbed area. Because of the dissimilar results between data collected at BG-1 and BG-2 and the possible heterogeneity present in BG-1, additional study to develop a representative background reference area for the Morrison Formation may be warranted.

In addition to the surface gamma survey performed in background reference areas, subsurface static gamma measurements were collected in the boreholes completed in the background reference areas. These measurements were used to establish subsurface static gamma screening levels for Survey Areas A and B. Where possible, the selected subsurface static gamma screening level values met the following criteria: (1) it was the lowest value measured at or below 1 ft bgs and (2) it was not directly measured on bedrock. These subsurface static gamma screening levels provide a comparison and assessment tool for Survey Areas A and B and are included as ILs for the Site.

Surface and subsurface static gamma measurements were not collected in the attempted borehole at BG-1 (S220-SCX-002) due to a gamma meter malfunction (refer to Section 3.3.1.1). Therefore, subsurface static gamma measurements for Survey Area A are compared to a subsurface static gamma IL identified from borehole S220-SCX-001 in BG-2 instead. It is important to note that surface gamma measurements and Ra-226/metals concentrations in BG-2 were lower than those from BG-1. Therefore, the subsurface static gamma IL developed from BG-2 should not be used as the only evidence to define the depth of mining-related impacts within Survey Area A. The lack of subsurface static gamma measurements from BG-1 is included as a data gap in Section 4.8. Subsurface static gamma measurements from BG-2 and BG-3 are summarized in Table 4-2 and in Appendix C.2. Four subsurface static gamma measurements of 7,171, 7,270, 7,280, and 7,761 cpm were collected from the down-hole depths of 0.5, 1.0, 1.5, and 1.8 ft bgs, respectively from borehole S220-SCX-001 in BG-2. The lowest measured value, at or below one ft bgs and not directly measured on bedrock, was 7,270 cpm. This value was used as the subsurface static gamma IL for Survey Area A. Only one subsurface gamma measurement of 11,112 cpm was measured from BG-3 borehole S220-BG3-011 at the down-hole refusal depth of 0.5 ft bgs, and was used as the subsurface static gamma IL for Survey Area B.

However, it is important to consider that the subsurface static gamma IL is based on a single measurement, and it is not statistically derived. For this reason, subsurface static gamma IL exceedances should be considered in conjunction with additional lines of evidence including: (1) down-hole trends of static gamma measurements; (2) changes in lithology within the

borehole; and (3) a qualitative comparison of subsurface static gamma measurements to Ra-226 and/or metals concentrations in subsurface samples.

It is important to consider that the subsurface static gamma IL measurements may be elevated relative to the surface gamma IL because increases in static gamma measurements with depth can result from the detector being in closer proximity to bedrock that has naturally elevated concentrations of radionuclides, and/or geometric effects. Geometric effects are the result of the detector measuring gamma radiation from all directions, regardless of whether it is in a borehole or suspended in air. Gamma radiation measured with the detector held at the ground surface is primarily from the ground beneath the detector. As the detector is advanced down the borehole it measures gamma radiation from the surrounding material emanating from an increasing number of angles. Therefore, as the detector is lowered in the borehole it will generally measure increasingly higher values to a certain depth given a constant source. At approximately 1 ft to 2 ft bgs, the detector is essentially surrounded by solid ground and further increases related to borehole geometry are not expected. Because downhole geometric effects influence static gamma measurements just below ground surface, static gamma measurements collected at or greater than 0.1 ft bgs are considered subsurface.

Due to the differing geometric effects, surface static gamma measurements at borehole locations may only be qualitatively compared to subsurface static gamma measurements, and the subsurface static gamma IL does not apply to the surface static gamma measurements. Instances where the surface static gamma measurement is greater than subsurface static gamma measurements suggest higher levels of radionuclides and may be indicative of the presence of TENORM at the surface, but additional lines of evidence are generally needed to support that conclusion.

The Site gamma measurements, and soil and sediment sample analytical results were compared to their respective ILs to confirm COPCs (refer to Section 4.4) and to identify areas of the Site where ILs are exceeded (refer to Section 4.5). The calculated ILs provide a line of evidence to evaluate potential mining-related impacts, and to support future Removal or Remedial Action evaluations at the Site.

4.2 SITE GAMMA RADIATION SURVEY RESULTS AND PREDICTED RADIUM-226 CONCENTRATIONS

4.2.1 Site Gamma Radiation Results

4.2.1.1 Surface Gamma Survey

Results of the Site surface gamma survey are shown in Figure 4-1a where the calculated surface gamma ILs for each background reference area are used to set bin ranges with color coding to illustrate the spatial extent and patterns of surface gamma measurements within the entire Survey Area. The bins ranges were based on the minimum site gamma measurement, the background reference area ILs, and the maximum site gamma measurement. The maximum

survey measurement was 61,743 cpm, which was greater than two times the maximum IL (i.e. BG-1 IL of 21,576 cpm) and occurred in an area within/adjacent to Waste Pile 1.

Surface gamma measurements were generally highest in the graded/disturbed reclaimed area and Waste Pile 1. A description of and photographs of these areas are provided in Section 3.2.2.1 and Appendix B-1, photograph numbers 2, 4, and 5.

The spatial distribution of surface gamma measurements and IL exceedances are shown in Figures 4-1b and 4-1c for Survey Areas A and B, respectively, and are described below:

- Survey Area A (refer to Figure 2-8 alongside Figure 4-1b) – Surface gamma IL exceedances (greater than 21,576 cpm) were observed primarily in four areas: (1) Waste Pile 1 and areas immediately adjacent to the waste pile; (2) the graded/disturbed reclaimed area; (3) three ephemeral drainages that originated from the west and northwest claim boundaries, drained through the graded/disturbed reclaimed area and into Survey Area B; and (4) associated with bedrock outcrops that occur along the eastern side of the ridge.

- Survey Area B (refer to Figure 2-8 alongside Figure 4-1c) – Surface gamma IL exceedances (greater than 10,677 cpm) were observed primarily in four areas associated with mining-related disturbances, including: (1) areas east of, downgradient of, and adjacent to Waste Pile 1; (2) areas downgradient of the graded/disturbed reclaimed area; (3) two ephemeral drainages that originated in Survey Area A, and drained from the northwest claim boundary through the graded/disturbed reclaimed area, through the previously designated borrow source area, and terminated in the surrounding plains; and (4) the eastern potential haul road.

Survey Area A is also compared to the surface gamma survey IL calculated for BG-2 (8,395 cpm; refer to Figure 4-1b, Appendix D.1, and Table D.1-4). The BG-2 IL best represents the southern portion of the claim area on top of the ridge where there was more soil cover, and the surface gamma survey IL was not helpful in distinguishing areas of the Site that were impacted because gamma measurements in portions of the Site that are not impacted (i.e., along the western and eastern portion of the ridge) by mining exceed the BG-2 IL.

Three potential data gaps were identified for the surface gamma survey, as listed below:

1. For a portion of the northern potential haul road, the gamma survey was limited to the centerline of the road, and the shoulders were not surveyed, due to an oversight by field personnel. For the potential haul road that runs east of the Site, only the shoulders were surveyed due to oversight by field personnel.

2. The gamma survey was not extended to the southeast in Survey Area B until all gamma measurements were less than the surface gamma IL based on professional judgment that this area contained only NORM, including soils/sediments that may have runoff from the undisturbed bedrock outcrops uphill along the eastern flank of the ridge.

3. The survey was not extended laterally from the eastern potential haul road where gamma measurements were greater than the IL as the result of an oversight. However, this area is approximately 1,000 feet east of and across the main drainage from the Site and appears to contain NORM related to the underlying Morrison Formation bedrock. During the selection of

potential background reference areas, surface gamma measurements along the ridge south of the home-sites were consistently above 15,000 cpm as shown in the *Site Clearance Data Report*. The elevated measurements were associated with bedrock outcrops and the anomalous green sands also present in BG-1, these areas were undisturbed by mining.

4.2.1.2 Subsurface Gamma Survey

Surface and subsurface static gamma measurements were collected at all 21 borehole locations. Surface and subsurface static gamma measurement locations are shown in Figures 4-1b and 4-1c. Measurements and corresponding measurement depths are provided in Table 4-2 and are shown on the borehole logs in Appendix C.2. Surface and subsurface static gamma measurements from the boreholes are presented below by Survey Area:

- Survey Area A – the subsurface static gamma IL (7,270 cpm) was exceeded in seven of the eight boreholes in Survey Area A. The IL was not exceeded in borehole S220-SCX-007, located upgradient of any mining-disturbed or impacted areas. The maximum subsurface static measurement (581,372 cpm) was measured at 3.0 ft bgs in borehole S220-SCX-016, which was in Waste Pile 1. All subsurface static gamma measurements collected from boreholes S220-SCX-013, -SCX-014, and -SCX-015, located in or adjacent to Waste Pile 1, were greater than 130,519 cpm (i.e., greater than 17 times the IL). Static gamma measurements decreased with depth in borehole S220-SCX-007. For all other boreholes in Survey Area A, static gamma measurements generally increased with depth, except for borehole S220-SCX-016, which showed an increase from ground surface to 3.0 ft bgs (581,372 cpm) at the bedrock contact, but then decreased to 13,362 cpm within bedrock at 4.5 ft bgs prior to the termination depth of 5.0 ft bgs.

- Survey Area B – the subsurface static gamma IL (11,112 cpm) was exceeded in all 13 boreholes in Survey Area B. The maximum subsurface static measurement (127,004 cpm) was measured at 14.0 ft bgs in borehole S220-SCX-022, which was in the eastern portion of Survey Area B. The remaining 12 boreholes had IL exceedances that were less than 39,115 cpm (i.e., less than four times the IL). In six boreholes (S220-SCX-003, -SCX-009, -SCX-010, -SCX-012, -SCX-020, and -SCX-021), static gamma measurements initially increased with depth and then decreased further down-hole. In boreholes S220-SCX-011, -SCX-017, -SCX-018, -SCX-019, -SCX-022 and -SCX-023, static gamma measurements fluctuated with depth. Borehole S220-SCX-008 had an overall increase in static gamma measurements with depth and S220-SCX-003 had an overall decrease in static gamma measurements with depth. There was no clear pattern observed with respect to borehole location and down-hole increases or decreases in static gamma measurements. In three boreholes (S220-SCX-012, -SCX-018, and –SCX-019), static gamma measurements were greater than the IL in soil and decreased to less than the IL in below the bedrock contact.

4.2.2 Gamma Correlation Results

The high-density surface gamma measurements and concentrations of Ra-226 in surface soils obtained from the Gamma Correlation Study (refer to Section 3.3.1.3) were used to develop a correlation equation, using regression analysis, between the mean gamma measurements and Ra-226 concentrations measured in the co-located composite surface soil samples. This

correlation is meant to be used as a general screening tool, and provides approximate predicted Ra-226 concentrations.

Analytical results of the correlation samples, which were used to develop the correlation equation, are presented in Table 4-3. The mean value of the gamma survey results from the correlation plots, with their corresponding Ra-226 concentrations and a graph showing the linear regression line and adjusted Pearson's Correlation Coefficient (R^2) value for the correlation, are shown in Figure 4-2a. The regression produced an adjusted R^2 value of 0.89 which is within the acceptance criterion of 0.8 to 1.0 described in the *RSE Work Plan* and indicates that surface gamma results correlate with Ra-226 concentrations in soil. The correlation model may have been influenced by the limited number of correlation sample locations. Users of the regression equation should be aware of the limitations of the dataset and be cautious when estimating Ra-226 concentrations. The correlation equation to convert gamma measurements in cpm to predicted surface soil Ra-226 concentrations in pCi/g for the Site is:

$$\text{Gamma (cpm)} = 2{,}499 \times \text{Surface Soil Ra-226 (pCi/g)} + 4{,}918$$

The predicted Ra-226 concentrations in soil, as calculated from the gamma measurements using the developed correlation equation, are shown in Figure 4-2a. Ra-226 concentrations predicted using gamma measurements lower than the minimum (8,673 cpm) and greater than the maximum (32,608 cpm) mean gamma measurements from the Gamma Correlation Study are extrapolated from the regression model and are therefore uncertain. Using the correlation equation, the predicted Ra-226 concentration associated with the minimum mean gamma measurement is 1.5 pCi/g and the concentration associated with the maximum mean gamma measurement is 11.1 pCi/g. Therefore, predicted Ra-226 concentrations less than 1.5 pCi/g and greater than 11.1 pCi/g should be limited to qualitative use only. The correlation locations were intentionally selected to be focused on the lower range of gamma measurements observed at the Site. Mean gamma measurements for correlation locations ranged from 8,673 to 32,608 cpm. The correlation was focused on the lower range because future Removal or Remedial Action decisions are more critical at lower Ra-226 concentrations where the limits of remediation may be defined.

The predicted Ra-226 concentrations for the Site are shown in Figure 4-2a. The elevated predicted Ra-226 concentrations occur in the same areas where the elevated surface gamma measurements occur (refer to Section 4.2.1). This is because the predicted Ra-226 concentrations are based on a correlation with the gamma measurements. Predicted Ra-226 concentrations in the Survey Area range from 0.4 to 22.7 pCi/g, with a mean of 2.9 pCi/g, and a standard deviation of 1.9 pCi/g. Bin ranges in Figure 4-2a are based on these mean and standard deviation values.

The gamma correlation was not used for the Site Characterization, which instead relied on actual gamma radiation measurements and soil analytical results. However, predicted Ra-226 concentrations were compared to the Ra-226 laboratory concentrations measured in surface soil samples collected at surface and borehole locations, as shown in Figure 4-2b. The correlation results were also compared to investigation levels, as shown in Figure 4-2c. Per the Agencies,

these comparisons can be used for site characterization and are one of many analyses that can be used to interpret the data (NNEPA, 2018).

When comparing the predicted Ra-226 concentrations to the Ra-226 laboratory concentrations, soil/sediment sample locations are generally not co-located with specific gamma measurement locations (refer to Figure 4-2b). Therefore, the measured Ra-226 laboratory concentrations can only be qualitatively compared to the nearby predicted Ra-226 concentrations. Sample location S220-SCX-07 is not included in this evaluation because the sample collected at ground surface at the location extends from 0 to 0.75 ft bgs and the sample is classified as a subsurface sample. At 16 of the 30 sample locations, the measured Ra-226 laboratory concentrations were within the applicable predicted Ra-226 bin ranges. For 12 of the 14 sample locations where laboratory Ra-226 concentrations did not fall within the applicable predicted Ra-226 bin range, the predicted Ra-226 concentrations were lower than the Ra-226 laboratory concentrations. At the remaining two locations predicted Ra-226 concentrations were higher than the Ra-226 laboratory concentrations. One-half (seven) of these sample locations had Ra-226 laboratory concentrations and predicted Ra-226 concentrations that were within approximately one standard deviation (1.9 pCi/g) of each other. However, seven sample locations (S220-CX-004, -CX-006, -SCX-006, -SCX-009, -SCX-010, -SCX-012, and -SCX-017) had notable differences between the predicted and laboratory Ra-226 concentrations; the Ra-226 laboratory concentrations higher than the predicted values at all of these locations. Excluding one location, the Ra-226 laboratory concentrations at these seven sample locations ranged from 6.85 pCi/g to 10.1 pCi/g; the one exception was S220-CX-010, the Ra-226 laboratory concentration was 24.6 pCi/g. The differences observed between the predicted and actual Ra-226 values at the Site are likely a function of the natural heterogeneity in Ra-226 concentrations and gamma radiation measurements. This natural heterogeneity affects the correlation based on the five Gamma Correlation Study areas, and the predicted values, based on the subsequent gamma measurements.

The predicted Ra-226 concentrations were also compared to the Ra-226 ILs from each Survey Area, as shown in Figure 4-2c. The symbols for surface sample locations and boreholes where Ra-226 concentrations in surface soil/sediment samples exceeded the IL are highlighted with yellow halos. The predicted Ra-226 concentrations exceeded the Ra-226 ILs for most of Survey Area B and little to none of Survey Area A. In addition, for most of the soil/sediment sample location within the area where the predicted Ra-226 concentrations exceeded the ILs, the surface sample contained Ra-226 concentrations that exceeded the Ra-226 IL. The area of the Site where predicted Ra-226 values exceeded the ILs is compared to surface gamma IL exceedances in Section 4.5.

The correlation soil samples were also analyzed for thorium isotopes Th-232 and Th-228. The objectives of the thorium analyses were to assess the potential effects of Th-232 series radioisotopes on the correlation of gamma measurements to concentrations of Ra-226 in surface soils (i.e., to evaluate whether gamma-emitting radioisotopes in the Th-232 series are impacting gamma measurements at the Site). The justification for the analysis is provided in Section 3.3.1.3. A multivariate linear regression (MLR) model was performed by ERG to relate the

gamma count rate to multiple soil radionuclides simultaneously. The MLR and results are described extensively in Appendix A. ERG identified that the thorium series radionuclides do not affect the prediction of concentrations of Ra-226 from gamma survey measurements at the Site.

4.2.2.1 Secular Equilibrium Results

The activities of Th-230 and Ra-226 were compared to consider whether the uranium series is in secular equilibrium at the Site (refer to Section 3.3.1.4 and Appendix A). A linear regression was performed on the dataset (refer to Appendix A Figure 9). The p-value for the regression slope is significant (i.e., $p < 0.05$) and the adjusted R^2 meets the study DQO (adjusted $R^2 > 0.8$), indicating that Ra-226 and Th-230 exist in equilibrium. However, when compared to a y=x line (this line represents a perfect 1:1 ratio between Th-230 and Ra-226, indicating secular equilibrium), the y=x line falls partially outside of the 95% UCL bands of the Th-230/Ra-226 regression, indicating Ra-226 and Th-230 are not in secular equilibrium at the Site (refer to figures in Appendix A). This may be a consideration in the future if a human health and/or ecological risk assessment is performed.

4.3 SOIL METALS AND RADIUM-226 ANALYTICAL RESULTS

A total of 30 surface soil/sediment grab samples (27 soil and three sediment) from 30 locations, and 30 subsurface soil/sediment grab samples (27 soil and three sediment) from 19 borehole locations were collected in Survey Areas A and B (refer Table 3-1 and Appendix C). The metals and Ra-226 analytical results for each Survey Area are compared to their respective ILs and presented in Tables 4-4a and 4-4b. Figure 4-3 present the spatial patterns, both laterally and vertically, of metals and Ra-226 detections and IL exceedances in the soil/sediment samples.

Ra-226 and/or metals concentrations exceeded their respective ILs in all but two surface soil samples (S220-CX-008 in Survey Area A and S220-SCX-022 in Survey Area B) and in all but one discrete subsurface soil sample in Survey Area A (S220-SCX-007) and four discrete subsurface soil samples in Survey Area B (S220-SCX-008, -SCX-017, -SCX-019, and -SCX-022). The highest exceedances of Ra-226 and metals ILs were associated with Waste Pile 1 or areas immediately downgradient or adjacent to the waste pile. The maximum concentrations for all analytes were detected in subsurface soil sample S220-SCX-016, which was collected from Waste Pile 1 in Survey Area A. Surface and subsurface soil/sediment IL exceedances for each analyte, with respect to Survey Area A and Survey Area B, are described below. Presented sample counts include normal samples and do not include duplicate samples:

- Ra-226
    - Survey Area A – the Ra-226 IL (11.8 pCi/g) was exceeded in three out of ten surface soil samples and six out of 10 subsurface soil samples from four boreholes. Survey Area A Ra-226 concentrations ranged from 1.04 to 206 pCi/g and the maximum Ra-226

detection (206 pCi/g) was from subsurface soil sample S220-SCX-016 collected from Waste Pile 1.

- Survey Area B – the Ra-226 IL (1.77 pCi/g) was exceeded in 17 out of 20 surface soil/sediment samples and 13 out of 20 subsurface samples from 13 boreholes. Survey Area B Ra-226 concentrations ranged from 0.47 to 33.2 pCi/g. The maximum Ra-226 detection (33.2 pCi/g) was from surface soil sample S220-CX-001 collected downgradient from Waste Pile 1.

- Uranium
  - Survey Area A – The uranium IL (6.36 mg/kg) was exceeded in one out of ten surface soil samples and six out of ten subsurface soil samples from four boreholes. Survey Area A uranium concentrations ranged from 1.1 to 91 mg/kg. The maximum uranium detection (91 mg/kg) was from subsurface soil sample S220-SCX-016 collected from Waste Pile 1.
  - Survey Area B – The uranium IL (1.13 mg/kg) was exceeded in 18 out of 20 surface soil/sediment samples, and in 15 out of 20 subsurface samples from 13 boreholes. Survey Area B uranium concentrations ranged from 0.69 to 26 mg/kg. The maximum detection (26 mg/kg) was from surface soil sample S225-CX-001 located just downgradient of Waste Pile 1.

As a broader point of reference, a regional study of the Western US documented uranium concentrations in soil that ranged from 0.68 to 7.9 mg/kg, with a mean value of 2.5 mg/kg (USGS, 1984). Uranium concentrations were less than the typical range of concentrations in Survey Area A and Survey Area B, with the exception of six samples in Survey Area A and one sample in Survey Area B.

- Arsenic
  - Survey Area A – the arsenic IL (3.83 mg/kg) was exceeded in five out of ten surface soil samples and seven out of ten subsurface soil samples from six boreholes. Survey Area A arsenic concentrations ranged from 1.1 to 730 mg/kg. The maximum arsenic detection (730 mg/kg) was from subsurface soil sample S220-SCX-016 collected from Waste Pile 1.
  - Survey Area B – the arsenic IL (1.50 mg/kg) was exceeded in 15 out of 20 surface soil/sediment samples and 11 out of 20 subsurface samples from 13 boreholes. Survey Area B Arsenic concentrations ranged from 1.0 to 56 mg/kg. The maximum arsenic detection (56 mg/kg) was from a duplicate composite subsurface soil sample collected from S220-SCX-012, located downgradient of Waste Pile 1. The duplicate concentration was greater than 10 times the S220-SCX-012 normal sample result (3.6 mg/kg). The RSE QAPP established an acceptable Relative Percent Difference (RPD) of 30 percent (refer to Appendix F.1) and the RPD for S220-SCX-012 and the -SCX-012 Dup is 176 percent. Therefore, these samples do not meet the RPD for arsenic. The discrepancy may be a result of heterogeneity/variability in the soil samples. The maximum arsenic detection in a normal sample was 7.5 mg/kg, the sample was collected from S220-SCX-010, located in the drainage northwest of the Site.

As a broader point of reference, a regional study of the Western US documented arsenic concentrations in soil that ranged from less than 0.10 to 97 mg/kg, with a mean value of 5.5 mg/kg (USGS, 1984). Arsenic concentrations in Survey Area A and Survey Area B were within the typical range of regional values in soil/sediment samples, with the exception of three samples in Survey Area A that were greater than the regional range.

- Molybdenum
    - Survey Area A – the molybdenum IL (0.332 mg/kg) was exceeded in eight out of 10 surface soil samples and nine out of 10 subsurface soil samples from six boreholes. Molybdenum was not detected in one sample and detected concentrations in Survey Area A ranged from 0.22 to 630 mg/kg. The maximum molybdenum detection (630 mg/kg) was from subsurface soil sample S220-SCX-016 collected from Waste Pile 1.
    - Survey Area B – the molybdenum IL (0.367 mg/kg) was exceeded in 18 out of 20 surface soil/sediment samples and 14 out of 20 subsurface samples from 13 boreholes. Molybdenum was non-detect in three samples in Survey Area B, and detected concentrations ranged from 0.22 to 7.7 mg/kg. The maximum molybdenum detection (7.7 mg/kg) was from surface soil sample S220-SCX-017 collected downgradient of Waste Pile 1.

As a broader point of reference, a regional study of the Western US documented molybdenum concentrations in soil that ranged from less than 3 to 7 mg/kg, with a mean value of 0.85 mg/kg (USGS, 1984). Molybdenum concentrations in Survey Area A and Survey Area B were within the typical range of regional values in soil/sediment samples, with the exception of five samples in Survey Area A and one sample in Survey Area B.

- Selenium – ILs for selenium were not identified because selenium sample results in the background areas were all non-detect.
    - Survey Area A – Selenium was detected in one surface soil sample (S220-CX-010) and three subsurface soil samples from two locations (S220-SCX-015 and -SCX-016). Survey Area A detected selenium concentrations ranged from 1.6 to 8.4 mg/kg. The maximum selenium detection (8.4 mg/kg) was from subsurface soil sample S220-SCX-016 collected from Waste Pile 1.
    - Survey Area B – Selenium was detected in the one duplicate composite sample (2.6 mg/kg) from borehole S220-SCX-012 collected downgradient of Waste Pile 1. The normal S220-SCX-012 composite sample result was below the laboratory reporting limit of 0.97 mg/kg. The discrepancy may be a result of heterogeneity/variability within the soil samples.

As a broader point of reference, a regional study of the Western US documented selenium concentrations in soil that typically ranged from less than 0.10 to 4.3 mg/kg, with a mean value of 0.23 mg/kg (USGS, 1984). Selenium concentrations were less than the typical range of values in Survey Area A and Survey Area B, with the exception of two samples in Survey Area A.

- Vanadium
  - Survey Area A – The vanadium IL (16.0 mg/kg) was exceeded in nine out of ten surface soil samples and in nine out of 10 subsurface soil samples from five boreholes. Survey Area A vanadium concentrations ranged from 5.7 to 340 mg/kg. The maximum vanadium detection (340 mg/kg) was from subsurface soil sample S220-SCX-006 located on west of the claim boundary.
  - Survey Area B – The vanadium IL (12.6 mg/kg) was exceeded 17 out of 20 surface soil/sediment samples and 12 out of 20 subsurface samples from 13 boreholes. Survey Area B vanadium concentrations ranged from 6.1 to 260 mg/kg. The maximum vanadium detection (280 mg/kg) was from surface soil sample S225-CX-001 located just downgradient of Waste Pile 1.

As a broader point of reference, a regional study of the Western US documented vanadium concentrations in soil that ranged from 7 to 500 mg/kg, with a mean value of 70 mg/kg (USGS, 1984). Vanadium concentrations were within the typical range of regional background values in Survey Areas A and B.

4.4 CONSTITUENTS OF POTENTIAL CONCERN

Based on the results presented in Sections 4.2 and 4.3, arsenic, molybdenum, uranium, vanadium, and Ra-226 concentrations in soil/sediment and gamma radiation measurements exceeded their respective ILs in Survey Areas A and B and are confirmed COPCs for the Site. An IL for selenium was not identified because selenium sample results were non-detect in the background areas. However, because selenium was detected in Survey Areas A and B, it is also confirmed as a COPC for the Site.

4.5 AREAS THAT EXCEED THE INVESTIGATION LEVELS

The approximate lateral extent of surface gamma IL exceedances in soil/sediment is 8.4 acres, as shown in Figure 4-4a. To estimate this area, polygons were contoured around portions of the Site that had multiple, contiguous surface gamma IL exceedances and then the total area within the polygons was calculated. Figures 4-4b and 4-4c show larger scale views of each of the two Survey Areas to better display those areas with multiple, contiguous surface gamma IL exceedances. Seven sample locations, where IL exceedances occurred, were not co-located with surface gamma IL exceedances, as follows:

- Survey Area A –there were four locations, which were located generally adjacent to areas where the surface gamma IL was exceeded (S220-CX-007, -CX-010, -SCX-005, and -SCX-006). Sample locations S220-CX-007, -SCX-005, and -006 are directly adjacent to mapped mining related impacts (refer to Figure 3-6). S220-CX-010 was downgradient from mineralized bedrock along the side of the ridge.
- Survey Area B – two locations, S220-CX-009 and -SCX-023, were adjacent to areas where the surface gamma IL was exceeded, and the third (S220-SCX-022) was within approximately 30 ft of the area. S220-CX-009 was located along the potential haul road, whereas

S220-SCX-022 and -SCX-023 were located outside the area of mining-related features at the Site (refer to Figure 3-6b). Subsurface sample S220-SCX-022 exceeded Ra-226, arsenic, molybdenum, uranium, and vanadium ILs at a sample depth of 5-10 ft bgs, but did not exceed Ra-226/metals ILs at the surface sample depth of 0-0.5 ft bgs or at the subsurface sample depth of 19-20 ft bgs. Surface sample S220-SCX-023 uranium concentration was less than two times the IL, and subsurface sample S220-SCX-023 arsenic concentration was less than two times the IL.

Figure 4-5 shows the vertical extent of IL exceedances in each borehole by incorporating information from each location, including: (1) depth to bedrock; (2) total borehole depth; and (3) depth range of IL exceedances. Table 4-5 lists the IL exceedances identified at each borehole location and Figure 4-5 shows the surface gamma IL exceedances for reference.

IL exceedances in metals and Ra-226 concentrations at surface and subsurface sample locations were typically, but not always co-located with surface gamma survey measurements and/or subsurface static gamma measurements that also exceeded their ILs. Variations occur due to natural variability and the different field methods. For example, a small piece of mineralized rock or petrified wood may have been collected in a soil sample but may not have been detected by the gamma meter in the gamma survey due to distance from the meter, the depth below ground surface, or because the gamma meter measures radiation over a larger area than the discrete soil sample location.

The lateral extent of the IL exceedances (for surface gamma data) shown in Figure 4-4a were compared to the predicted Ra-226 concentrations that exceeded ILs in Figure 4-2c. Predicted Ra-226 concentrations exceeded the Ra-226 IL in a smaller area of the Survey Area A than the surface gamma measurements exceeded the IL. . For Survey Area B, the predicted Ra-226 concentrations exceeded the Ra-226 IL over a larger area than the surface gamma measurements exceeded the surface gamma IL, but the patterns were generally similar. The smaller area of predicted Ra-226 IL exceedances in Survey Area A was the most notable and may indicate that the actual Ra-226 IL is higher when compared to the surface gamma IL for that area and/or that predicted Ra-226 values are lower.

4.6 AREAS OF TENORM AND NORM

A multiple lines of evidence approach was used to evaluate the Site and distinguish areas of TENORM from areas of NORM within the Survey Area, as described in Section 3.3.3. Based on this evaluation, 9.4 acres, out of the 15.4 acres of the Survey Area, were estimated to contain TENORM at the Site. This estimate is inclusive of three areas: (1) Waste Pile 1, the graded/disturbed reclaimed area, and the excavation area; (2) the ridges and plains downgradient from the Site to the north, east and, west and (3) the potential haul roads. The area containing TENORM is shown in relation to the lateral extent of IL exceedances in Figure 4-6 and in relation to the gamma measurements in Figure 4-7.

The RSE data that supports the delineation of TENORM at the Site includes:

- Historical Data Review Conclusions
    - Historical document review indicated that the Site was in operation during 1954, and 31 tons (approximately 62,000 pounds) of ore that contained 75 pounds of 0.12 percent U_3O_8 and 324 pounds of 0.52 percent V_2O_5 was produced from the Site.
    - Historical document review indicated reclamation activities were proposed for the Site that included: excavate a waste pile and use the excavated material to backfill over the rim strip, cover the backfilled rim strip and the area with anomalous radioactive measurements with Class A material from a designated borrow source, grade the reclaimed area for positive drainage, and eliminate the access road. NAML met with Stantec field personnel and verified the following: (1) the reclaimed area was graded to establish favorable drainage conditions and erosion protection by directing drainage off of and around the reclaimed area; and (2) the access road near the Site was scarified and eliminated to prevent Site access.
- Geology/geomorphology
    - Bedrock at the Site consisted of two geologic Formations: (1) the Jurassic Salt Wash Member of the Morrison Formation, and (2) the Jurassic Summerville Formation. The Morrison Formation is known to have natural enrichments of uranium. In addition, portions of the Site consisted of shallow or outcropping bedrock. Therefore, the geology and geomorphology of the Site was conducive to the presence of NORM at or near the ground surface.
    - Two ephemeral drainages join into an unnamed drainage that could transport NORM/TENORM to the northwest and one ephemeral drainage could transport NORM/TENORM to the west. The drainages originate from the northwest claim boundary, drain near or through the graded/disturbed reclaimed area and excavation area, and terminate in the surrounding plains.
- Disturbance Mapping – field personnel observed the following surface features:
    - Two potential haul roads were observed on or within 0.25 miles of the Site. The potential haul roads ran from the home-sites to the northern surrounding plains in the northern portion of the Site.
    - A berm approximately 60 ft long, two ft high was observed. The berm was placed to direct overland water flow to the northwest and away from the reclaimed area.
    - An excavated area was observed to the north of the claim boundary. A portion of the excavation area was coincident with the borrow area used for Site reclamation. Two ephemeral drainages drained through this area and a portion of the southern potential haul road ran through this area.

- A waste pile (Waste Pile 1) was observed that was assumed to be related to historical mining activities that occurred on-site. Waste Pile 1 was directly downgradient of the claim boundary.

- A graded/disturbed reclaimed area was observed to the north of the claim boundary. This area surrounded Waste Pile 1 and was between the northwestern claim boundary and the excavated area.

- Site Characterization – site characterization data, included surface (lateral) and subsurface (vertical) data.

  - Waste Pile 1, the graded/disturbed reclaimed area, and the excavation area were characterized by the highest surface gamma measurements, subsurface static gamma measurements, and metals and Ra-226 concentrations at the Site.

  - The ridges and plains downgradient from the Site (to the north, east and, west) were characterized by one or more IL exceedances at every surface or subsurface soil/sediment sample location, with the greatest exceedances located next to or downgradient from Waste Pile 1 and/or the graded/disturbed reclaimed area.

  - Portions of the potential haul roads exceeded the surface gamma measurement IL.

  - During the potential background reference area evaluation, an area northwest of the claim boundary was evaluated, background reference area 5 (BG-5). Gamma survey measurements in BG-5 were above the IL identified for Survey Area B (refer to Figure D.1-2 in Appendix D.1). The surface gamma survey for the Site was eventually extended to include a portion of BG-5. As a result of the elevated gamma measurements in the area of BG-5, the TENORM boundary was extended to the west.

  - In the area east of the claim boundary, surface gamma survey measurements exceeded the IL for a limited area of Survey Area A and nearly all of Survey Area B. This area is downgradient from mineralized bedrock outcrops along the side of the ridge. Surface sample S220-CX-010 was collected in the area of the outcrops; Ra-226/metals concentrations exceeded their ILs and selenium was above the detection limits in S220-CX-010. As a result of the elevated surface gamma measurements and Ra-226/metals concentrations in S220-CX-010, this area is assumed to contain NORM.

  - Borehole location S220-SCX-006 and surface sample location S220-CX-007 are potentially located in the area of the historical rim strip and waste pile WP1 shown in Figure 2-2. The elevated Ra-226 concentration (56.30 pCi/L) and subsurface static gamma measurements collected between 2.0 and 2.5 ft bgs in S220-SCX-006 may be indicative of either residual soils from weathered bedrock near the bedrock contact, or from waste rock that was present in either WP1 or the rim strip that was then covered during reclamation at the Site. While the area of these samples is included in the TENORM area,

it is important to consider that a waste pile and rim strip were not observed by field personnel in this area.

- Metals concentrations in samples collected outside the area of TENORM (five locations) were less than or within the regional concentration values with the exception of the uranium concentration (21 mg/kg) in S220-CX-010.

- Potential mine waste material (e.g., color difference) was not observed in the boreholes that were advanced in and around the Waste Pile 1. It is important to note that the area of the waste pile polygon shown on Figures 2-7, 3-6, etc., was based on visual observations in the field during site mapping (prior to site characterization). The unconsolidated material observed in the boreholes consisted of fine-grained sands similar to what was observed in other boreholes at the Site. However, the boreholes with the highest subsurface static gamma measurements in both soil and bedrock are S220-SCX-013 through -SCX-016. Borehole -SCX-016 contained the highest static gamma measurements in subsurface soil at the Site (480,338 cpm) and exhibited a slightly different soil type (orange and tan, silty sand with gravel), which might be evidence of potential mine waste material. Similar soils were observed in boreholes located within the graded/disturbed reclaimed area and the excavation area and no potential mine waste was observed.

- It is important to consider that with the exception of two locations, the subsurface static gamma ILs were not used as the only evidence to delineate the vertical extent of TENORM that exceeded the IL at the Site. The surface sample at S220-SCX-008 exceeded the IL, but the subsurface sample did not (refer to Figure 4-3). Static gamma measurements were used to estimate that TENORM exceeding the IL extended to 1.5 ft bgs at this location. Ra-226 and metals IL exceedances in borehole S220-SCX-017 extended to 4.0 ft bgs; however static gamma measurements exceeded the IL between 4.0 and 10.0 ft bgs (a composite sample collected between 4.0 and 9.0 ft bgs did not contain Ra-226/metals concentrations that exceeded their ILs). The extended depth of IL exceedances at S220-SCX-017 was considered as one line of evidence for the alternative depth of TENORM (10 ft) provided for Group 5 in Section 4.7 below.

The area of the Site considered to contain TENORM (i.e., multiple lines of evidence indicated the presence of mining-related impacts) was 9.4 acres, as shown on Figure 4-8a. Portions of the TENORM exceeded one or more IL, where approximately 7.2 acres contained TENORM that exceeded the surface gamma IL and the majority of the sample locations where TENORM exceeded the ILs. TENORM exceeding the ILs was observed at four sample locations (S220-CX-007, -CX-009, -SCX-005, and -SCX-006) that were directly adjacent to areas of the Site that exceeded the surface gamma IL. TENORM that exceeded the ILs in Survey Areas A and Survey Area B is shown on Figures 4-8b and 4-8c, respectively, and is compared to mining-related features in Figure 4-8d.

4.7 TENORM VOLUME ESTIMATE

The volume estimate of TENORM that exceeded one or more ILs is approximately 19,126 yd^3, as shown in Figure 4-9a. The volume and area of TENORM associated with specific mine features is

listed in Table 3-2. This estimate was calculated using ESRI ArcGIS Desktop 10.3.1 Spatial Analyst Extension cut/fill tool (ESRI, 2017) utilizing the ground surface elevation contours developed from the orthophotographs coupled with hand-derived contours based on field personnel observations, depth to bedrock in boreholes, gamma measurements, sample analytical data, and historical mining documentation. Field observations included observations of disturbance, changes in vegetation, estimating/projecting the slope of underlying bedrock, and estimating the shape and topography of waste material and/or soil deposits.

TENORM exceeding the ILs at the Site was split into groups based on the depth or type of material to aid in analysis and describing the basis of the volumes. The locations, volume, and areas of these groups are shown in Figure 4-9a. The waste pile and graded/disturbed reclaimed area are also shown on Figure 4-9a for reference, and the volume and area of the waste piles are listed in Table 3-2. The assumptions that were used to calculate the volume of TENORM with IL exceedances were as follows:

General Assumptions

- There was limited exposed bedrock observed within the TENORM areas that exceeded the ILs; all areas were covered in some amount of soil/sediment, except limited areas within the graded/disturbed reclaimed area.
- There were little to no alluvial sediments observed within the drainages that drain the Site; they are erosional features within which little to no deposition has occurred and they terminate in the plains to the north of the Site.
- There are two general geomorphic areas within the Site, a ridge and plains, as shown in Figures 2-4 and 2-5. The ridge consists of shallow bedrock of the Morrison Formation, and the plains consist of Quaternary deposits that are become thicker to the north, east and west of the Site.
- Mining occurred at the Site within the graded/disturbed reclaimed area, targeted the Morrison Formation underlying the ridge, and was reclaimed as described in Section 2.1.4 and shown on Figure 2-8. Reclamation included filling in the mined area with soils that came from the borrow area shown as the excavation area on Figure 2-8. Subsurface sampling indicated that TENORM within the graded/disturbed reclaimed area extended to approximately 3.5 ft bgs.
- Soils outside the mining disturbed area, within the plains, extended from a few feet to over 20 ft bgs, based on the results of subsurface sampling, as shown in Figure 4-5.

Group Assumptions

- Group 1 (3,203 yd^3) – it was assumed for this area that TENORM above the ILs extended to an average depth of 1 ft bgs. The ground surface was not visibly disturbed in this area and surface gamma measurements are generally below or less than two times the IL.
- Group 2 (1,579 yd^3) – it was assumed that impacts or disturbance from mining (TENORM) extended to an average depth of 2 ft bgs; an alternative volume based on an assumption

of greater TENORM depth is provided below. IL exceedances at the borehole locations in Group 2 extend below 2 ft bgs. However, there is little to no visible ground disturbance in this area and static gamma measurements within the boreholes were generally stable.

- Group 3 (9,872 yd^3) – it was assumed that impacts or disturbance from mining (TENORM) was similar in depth to Group 2 (2 ft bgs). Bedrock within boreholes throughout the area was generally 2 ft bgs with the exceptions of S220-SCX-010 (3.5 ft bgs) and -SCX-012 (2.5 ft bgs).

- Group 4 (1,036 yd^3) – it was assumed that impacts or disturbance from mining (TENORM) was similar in depth to Group 2 (1 ft bgs). Though the ground surface is not visibly impacted, surface gamma survey measurements are up to two-times the IL.

- Group 5 (3,291 yd^3) – it was assumed that impacts or disturbance from mining (TENORM) was similar in depth to Group 1 (2 ft bgs); an alternative volume based on an assumption of greater TENORM depth is provided below. Visible impacts to the ground surface are not present in Group 5. Subsurface gamma measurements fluctuate for the first 2 ft bgs in S220-SCX-019, but are then generally stable at less than two-times the IL until petrified wood was encountered at approximately 12.5 ft bgs.

- Group 6 (145 yd^3) – TENORM above the IL was assumed to extend to 0.5 ft bgs in a portion of the potential haul road.

For Group 2, where soils that exceed the ILs extended to 3 to 14 ft bgs, assuming TENORM above the ILs extended to 10 ft bgs added 6,318 yd^3 to the total volume stated above. For Group 5, where soils that exceed the ILs extended to 11 to 22 ft bgs, assuming TENORM above the ILs extended to 10 ft bgs added an additional 13,165 yd^3 to the total volume stated above. Calculating the TENORM with the additional depth increased the volume of TENORM that exceeded one or more IL to 38,609 yd^3. However, due to the relatively steep slopes and potential for runoff of precipitation; downward leaching from surficial TENORM materials into underlying undisturbed NORM materials due to infiltration was considered negligible. The material at depth was not exposed to the accessible environment. As such, although this material at depths greater than 2 ft bgs may have IL exceedances, it is unlikely that it is TENORM, and is considered NORM. Additional characterization to further define the depths of TENORM in the areas of Groups 2 and 5 may be considered as part of future investigations at the Site.

Some areas to the south of the TENORM area, which includes a portion of the claim boundary, contained soils where surface gamma measurements and/or Ra-226 and metals concentrations exceeded their respective ILs; however, there is no evidence of disturbance and it is all upgradient and upwind of the mining disturbed area. This area was not included in the volume estimate.

Historical reclamation planning documents stated that approximately 50 bcy of waste pile material would be excavated and backfilled over the rim strip and then that area would be covered by 600 bcy of Class A topsoil (NAML, 1999). The NAML estimate is different than the volume estimates calculated for the Site. NAML was using different criteria for what they considered "waste" at the Site than the ILs identified for this study. The volumes developed for this RSE should not be compared to the NAML estimate.

4.8 POTENTIAL DATA GAPS AND SUPPLEMENTAL STUDIES

4.8.1 Data Gaps

Four potential data gaps were identified based on the Site Clearance and RSE data collection and analyses for the Site. These data gaps can be considered for subsequent evaluations in support of future Removal or Remedial Action evaluations at the Site.

1. The gamma survey of the portion of the potential haul road directly north of the claim boundary was limited to the approximate centerline of the potential haul road, excluding the shoulders of the potential haul road due to an oversight. For the potential haul road that runs east of the Site, only the shoulders were surveyed and the centerline was not due to an oversight.

2. The surface gamma survey was not extended laterally to the southeast until measurements were within background levels. However, this area is considered to contain NORM, and so this is not considered a significant data gap.

3. The survey was not extended laterally from the eastern potential haul road where gamma measurements were greater than the IL as the result of an oversight by field personnel. However, this area is approximately 1,000 ft east of, and across, the main drainage from the Site, near a ridge of the Morrison Formation, and appears to contain NORM.

4. Surface and/or subsurface static gamma measurements were not collected in the attempted borehole at BG-1 (S220-SCX-002) due to a gamma meter malfunction. Additionally, subsurface samples were not collected in BG-1 and BG-3.

4.8.2 Supplemental Studies

Following review of the RSE report data and discussions with the Agencies, a limited number of items were identified for supplemental work to be considered for subsequent evaluations in support of future Removal or Remedial Action evaluations at the Site, as follows:

1. Additional correlation studies may be needed to refine the relationship between gamma and Ra-226.

2. Additional study to develop a background reference area representative of the Morrison Formation is warranted.

3. Additional characterization to further define the depths of TENORM in the areas north of the excavation and east graded/disturbed reclaimed area (Groups 2 and 5 of the TENORM volume estimate, respectively) may be considered.

4. Subsurface samples may be warranted within the area of the berm or along the potential haul roads.

5.0 SUMMARY AND CONCLUSIONS

This report details the purpose and objectives, field investigation activities, findings, and conclusions of the Site Clearance and RSE activities conducted for the Site between July 2015 and August 2017. The Site is known as the Barton 3 site and is also identified by the USEPA as AUM identification #220 in the *2007 AUM Atlas*.

The primary objectives of the RSEs are to provide data required to evaluate relevant site conditions and to support future removal action evaluations at the Sites. It is not intended to establish cleanup levels or determine cleanup options or potential remedies. The purpose of the RSE data (e.g., the review of relevant information and the collection of data related to historical mining activities) is to determine the volume of TENORM at the Site in excess of ILs as a result of historical mining activities. ILs are based on the background gamma measurements (in cpm), and Ra-226 and metals concentrations, determined through statistical analyses, that are used to evaluate potential mining-related impacts. The RSE included historical data review, visual observations, surface gamma surveys, surface and subsurface static gamma measurements, and soil/sediment sampling and analyses. An estimate of areas containing TENORM was made based on an evaluation of the RSE information/data and multiple lines of evidence. The correlation between gamma measurements (in cpm) and concentrations of Ra-226 in surface soils (pCi/g) was developed as a potential field screening tool for future Removal or Remedial Action evaluations. The gamma correlation was not used for the Site Characterization, which relied instead on the actual gamma radiation measurements and soil/sediment analytical results. However, predicted Ra-226 concentrations were compared to the actual Ra-226 laboratory results and ILs from the surface soil/sediment samples at the Agencies' request.

The Site is in the northwestern Carrizo Mountain mining region. The Site was one of the small mining operations in the Carrizo Mountain mining region, located specifically in the northwestern Carrizo Mountain mining region. The Site was only in operation during 1954 and details regarding mine workings at the Site were not identified. The USAEC ore production records showed production from the Site in 1954 was 31 tons (approximately 62,000 pounds) of ore that contained 75 pounds of 0.12 percent U_3O_8 and 324 pounds of 0.52 percent V_2O_5.

Five potential background reference areas were considered. Two background reference areas (BG-1 and BG-3) were selected to develop surface gamma, subsurface gamma, Ra-226, and metals ILs for the two Survey Areas (Survey Area A and Survey Area B) at the Site.

Arsenic, molybdenum, uranium, vanadium, and Ra-226 concentrations in soil/sediment and gamma radiation measurements exceeded their respective ILs and are confirmed COPCs for the Site. An IL for selenium was not identified because selenium sample results were non-detect in the background areas. However, because selenium was detected in Survey Areas A and B, it is also confirmed as a COPC for the Site.

Surface gamma measurements and Ra-226 and metals concentrations were generally highest in areas that were coincident with mining-related features (Waste Pile 1). The maximum surface

gamma measurement (61,743 cpm) was over four times the highest surface gamma IL and occurred in an area within/adjacent to Waste Pile 1. The highest exceedances of Ra-226 and metals ILs were associated with Waste Pile 1 or areas immediately downgradient or adjacent to the waste pile. The maximum concentrations for all analytes were detected in subsurface soil sample S220-SCX-016, which was collected from Waste Pile 1 in Survey Area A.

Results of the Gamma Correlation Study indicated that surface gamma survey results correlate with Ra-226 concentrations in soil. Therefore, gamma surveys could be used during site assessments as a field screening tool to estimate Ra-226 concentrations in soil. Additional correlation studies may be needed to refine the relationship between gamma and Ra-226.

Based on the data analysis performed for this RSE report along with the supporting lines of evidence, approximately 9.4 acres out of the 15.4 acres of the Survey Area were estimated to contain TENORM. This estimate is inclusive of three areas: (1) Waste Pile 1, the graded/disturbed reclaimed area, and the excavation area; (2) the ridges and plains downgradient from the Site to the north, east and, west and (3) the potential haul roads. The areas outside of the TENORM boundary show no signs of disturbance related to mining and, therefore, are considered NORM (i.e., naturally occurring). Of the 9.4 acres that contain TENORM, 7.2 acres contain TENORM exceeding the surface gamma ILs and TENORM that exceeded the ILs most of the soil/sediment sample locations. The volume of TENORM that exceeds the ILs is estimated to be 19,126 yd^3 (14,623 cubic meters). It should be noted that the COPC measurements and concentrations in the area that contains TENORM that exceeded the ILs are generally higher than the COPC measurements and concentrations in the area of NORM located outside the TENORM boundary.

Four potential data gaps were identified based on the Site Clearance and RSE data collection and analysis for the Site, as listed in Section 4.8. These data gaps can be taken into consideration for subsequent evaluations in support of future Removal or Remedial Action evaluations at the Site.

6.0 ESTIMATE OF REMOVAL SITE EVALUATION COSTS

The Barton 3 RSE was performed in accordance with the requirements of the *Trust Agreement* to characterize existing site conditions. Project costs related to the RSE include the planning and implementation of the scope of work stipulated in the *Site Clearance Work Plan* and *RSE Work Plan,* and community outreach. Stantec's costs associated with the Barton 3 RSE were $510,252. Stantec's costs associated with interim actions (sign installation) were $4,000. In addition, Administrative costs provided by the Trust were estimated currently at $191,500[9,10]. Administrative costs will change due to continued community outreach and close out activities.

[9] This cost is based on an approved budget of May 8, 2018; Administrative work, including community communications, are not yet complete.
[10] Administrative costs were averaged across all Sites.

7.0 REFERENCES

American Heritage Dictionary, 2016®. American Heritage Dictionary of the English Language, Fifth edition. Published by Houghton Mifflin Harcourt Publishing Company.

Arizona Native Plant Society, 2000. Arizona Rare Plant Field Guide. US Government Printing Office. Washington, D.C.

ASTM, 2016. ASTM D6914 / D6914M-16, Standard Practice for Sonic Drilling for Site Characterization and the Installation of Subsurface Monitoring Devices, ASTM International, West Conshohocken, PA, www.astm.org

BING® Maps, 2016. BING Maps imagery web mapping service [Webpage] located at https://www.bing.com/maps. Accessed March 2016.

Chenoweth, W.L. 1984. Historical Review of Uranium-Vanadium Production in the Eastern Carrizo Mountains, San Juan County, New Mexico, and Apache County, Arizona. New Mexico Bureau of Mines and Mineral Resources.

Chenoweth, W.L. 1985. Historical Review Uranium-Vanadium Production in the Northern and Western Carrizo Mountains, Apache County, Arizona. Arizona Geological Survey. Open-File Report 85-13. June.

Cooper Aerial Surveys Company (Cooper), 2017. Collection of high-resolution aerial photographs and topographic data using a piloted fixed-wing aircraft. June 16.

Dictionary of Construction, 2018. [Webpage] located at http://www.dictionaryofconstruction.com/definition/bank-cubic-yard.html Accessed January 25, 2018.

Dinétahdóó Cultural Resource Management, 2016. A Cultural Resources Inventory of Eight Abandoned Uranium Mines (Northern Region) for MWH Americas, Inc. in Western and Shiprock Agencies of the Navajo Nation, in Utah, Arizona, and New Mexico. July.

Encyclopedia Britannica, 2017. [Webpage] located at https://www.britannica.com/place/Colorado-Plateau. Accessed June 05, 2017.

English Oxford Dictionary, 2018. [Webpage] located at https://en.oxforddictionaries.com. Accessed January 16, 2018.

ESRI World Imagery Map Service, 2018. [Webpage] located at (http://www.esri.com/data/imagery. July.

Kiver, E.P. and Harris, D.V., 1999. Geology of US Parklands (5th ed.). John Wile & Sons. ISBN0-471-33218-6.

MWH, now part of Stantec Consulting Services Inc. (formerly MWH Americas, Inc.) (MWH), 2016a. Site Clearance Work Plan, Navajo Nation Abandoned Uranium Mines Environmental Response Trust. April.

MWH, 2016b. Navajo Nation AUM Environmental Response Trust – First Phase Removal Site Evaluation Work Plan. October.

MWH, 2016c. Barton 3 Clearance Data Report – Revision 1, Navajo Nation Abandoned Uranium Mines Environmental Response Trust. December 2016.

MWH, 2016d. Scope of Work, Navajo Nation Abandoned Uranium Mines Environmental Response Trust, (SOW), April.

Navajo Abandoned Mine Lands (NAML), 1999. Carrizo #1 AML Project Contract Documents, February.

National Agriculture Imagery Program, 2018. [Webpage] located at https://gis.apfo.usda.gov/arcgis/services. Accessed July 2018.

National Park Service, 2017. [Webpage] located at https://science.nature.nps.gov/im/units/scpn/climate/climate.cfm. Accessed 2017 August 21.

Navajo Nation Department of Fish and Wildlife (NNDFW), 2008. Biological Resource Land Use Clearance Policies and Procedures, RCS-44-08. September 10.

Navajo Nation Division of Natural Resources (NNDNR), 2006. GIS Section; Navajo Nation BIA Agency, Grazing, and Chapter Boundaries. Map. February.

NNEPA, 2018. Letter and Agency Comments on Draft Barton 3 Removal Site Evaluation (RSE) Report. June 14, 2018.

Navajo Natural Heritage Program (NNHP), 2008. Species Accounts, Navajo Nation Endangered Species List, version 3.08.

Navajo Nation Historic Preservation Department (NNHPD), 2016. The Navajo Nation Permit Package 2016, Section Three: Fieldwork, Report Standard and Guidelines.

NNHPD, 2018. Call with Sadie Hoskie, Tamara Billie of NNHPD, and Linda Reeves, June 8, 2018.

Nystedt, J., 2016. "Re: Navajo Nation AUM Environmental Response Trust--First Phase." E-mail Message to Justin Peterson (Stantec). November 07. (Included in Appendix E of this RSE report)

O'Sullivan, R.B., and Beikman, H.M., 1963. Geology, structure and uranium deposits of the Shiprock quadrangle, New Mexico and Arizona: U .S. Geological Survey I-345, scale 1:250,000.

Schaetzl, R., and Thompson, M.L., 2015. Soils: Genesis and geomorphology. 2nd ed. Cambridge Univ. Press, Cambridge, UK.

Stantec Consulting Services Inc. (Stantec), 2017. Barton 3 Site Baseline Studies Field Report. May.

Turner, C.E., Peterson, F. 2004. Reconstruction of the Upper Jurassic Morrison Formation extinct ecosystem – a synthesis. Sedimentary Geology.

University of Utah, 2018. [Webpage] located at https://sed.utah.edu/Summerville.htm. Accessed February 2018.

United States (US), 2015. Settlement Agreement between the United States of America and the Navajo Nation, April 8.USGS National Geologic Map Database. [Webpage] located at https://ngmdb.usgs.gov. Accessed February 23, 2017.

US Department of Agriculture (USDA), 2011. Soil Survey of the Chinle Area, Parts of Apache and Navajo Counties, Arizona and San Juan County, New Mexico. USDA, Natural Resource Conservation Service. Washington, D.C.

US Environmental Protection Agency (USEPA), 1992. National Oil and Hazardous Substances Pollution Contingency Plan. Publication 9200.2-14. January.

USEPA, 2000. Multi-Agency Radiation Survey and Site Investigation Manual (MARSSIM), EPA 402-R-97-016, Rev. 1.

USEPA, 2002a. Guidance on Choosing a Sampling Design for Environmental Data Collection. EPA QA/G-5S, December.

USEPA, 2002b. Guidance on Environmental Data Verification and Data Validation. EPA QA/G-8, November.

USEPA, 2006. Guidance on Systematic Planning Using the Data Quality Objectives Process, EPA/240/B- 06/001, February.

USEPA, 2007a. Abandoned Uranium Mines and the Navajo Nation. Navajo Nation AUM Screening Assessment Report and Atlas with Geospatial Data. Prepared for U.S. Environmental Agency, Region 9 through an Interagency Agreement with U.S. Army Corps of Engineers. Prepared by TerraSpectra Geomatics in cooperation with Navajo Nation Environmental Protection Agency and Navajo Abandoned Mine Lands Reclamation Program. August.

USEPA, 2007b. Technologically Enhanced Naturally Occurring Radioactive Materials From Uranium Mining, Volumes I and II (EPA 402-R-05-007).

USEPA, 2013. Federal Actions to Address Impacts of Uranium Contamination in the Navajo Nation – Five Year Plan Summary Report, January.

USEPA, 2015. ProUCL Version 5.1 Technical Guide, Statistical Software for Environmental Applications for Data Sets with and without Nondetect Observations, September. https://www.epa.gov/sites/production/files/2016-05/documents/proucl_5.1_tech-guide.pdf

USEPA, 2016. ProUCL 5.1.00 Software.

USEPA, 2017. Technologically Enhanced Naturally Occurring Radioactive Materials (TENORM). [Webpage] located at https://www.epa.gov/radiation/technologically-enhanced-naturally-occurring-radioactive-materials-tenorm. Accessed July 19, 2017

US Fish and Wildlife Service (USFWS). 1996. Guidelines for Conducting and Reporting Botanical Inventories for Federally Listed, Proposed, and Candidate Plants. Sacramento Fish and Wildlife Office, Sacramento, California.

USFWS, 1998. Final Endangered Species Act (ESA) Section 7 Consultation Handbook, March 1998. https://www.fws.gov/endangered/esalibrary/ pdf/esa_section7_handbook.pdf

USFWS, 2008. Birds of Conservation Concern 2008. United States Department of Interior, Fish and Wildlife Service, Division of Migratory Bird Management, Arlington, Virginia. 85 pp.

US Geological Survey (USGS), 1967. Petrology of the Morrison Formation in the Colorado Plateau Region. Geological Survey Professional Paper 556.

USGS, 1984. Element Concentrations in Soils and Other Surficial Materials of the Conterminous United States. US Geological Survey Professional Paper 1270.

USGS, 2003. Flow Origin, Drainage Area, and Hydrologic Characteristics for Headwater Streams in the Mountain top Coal-Mining Region of Southern West Virginia, 2000-01.

USGS, 2017. [Webpage] located at https://geomaps.wr.usgs.gov/parks/province/coloplat.html. Accessed November 2017.

USGS, 2016. EarthExplorer [Webpage] located at https://earthexplorer.usgs.gov/. Accessed January 2016.

Western Regional Climate Center, 2017. [Webpage] located at http://www.wrcc.dri.edu/cgi-bin/cliMAIN.pl?az1634. Accessed 2017 January 23.

Weston Solutions, Inc., 2010. Barton 3 AUM Site Navajo Abandoned Uranium Mine Site Screen Report. August.

World Heritage Encyclopedia, 2017. [Webpage] located at http://www.worldheritage.org/article/WHEBN0014241395/Mineralization%20(geology) Accessed December 28. 2017.

TABLES

Table 3-1
Soil and Sediment Sampling Summary
Barton 3
Removal Site Evaluation Report - Final
Navajo Nation AUM Environmental Response Trust - First Phase

Sample Location	Sample Depth (ft bgs)	Sample Media	Sample Category	Sample Collection Method	Survey Area	Sample Date	Easting [1]	Northing [1]	Sample Types Metals, Total	Ra-226	Thorium
Background Reference Area Study - Background Area 1											
S220-BG1-001	0 - 0.5	soil	SF	grab	NA	10/6/2016	638571.60	4089035.61	N	N	--
S220-BG1-002	0 - 0.5	soil	SF	grab	NA	10/6/2016	638570.00	4089036.18	N	N	--
S220-BG1-003	0 - 0.5	soil	SF	grab	NA	10/6/2016	638570.09	4089038.28	N	N	--
S220-BG1-004	0 - 0.5	soil	SF	grab	NA	10/6/2016	638572.22	4089039.10	N	N	--
S220-BG1-005	0 - 0.5	soil	SF	grab	NA	10/6/2016	638573.40	4089038.65	N	N	--
S220-BG1-006	0 - 0.5	soil	SF	grab	NA	10/6/2016	638572.77	4089036.27	N	N	--
S220-BG1-007	0 - 0.5	soil	SF	grab	NA	10/6/2016	638574.92	4089039.39	N;FD;MS;MSD	N;FD	--
S220-BG1-008	0 - 0.5	soil	SF	grab	NA	10/6/2016	638576.26	4089037.56	N	N	--
S220-BG1-009	0 - 0.5	soil	SF	grab	NA	10/6/2016	638576.52	4089036.08	N	N	--
S220-BG1-010	0 - 0.5	soil	SF	grab	NA	10/6/2016	638575.68	4089035.27	N	N	--
S220-BG1-011	0 - 0.5	soil	SF	grab	NA	3/23/2017	638572.03	4089027.82	N	N	--
S220-BG1-012	0 - 0.5	soil	SF	grab	NA	3/23/2017	638573.45	4089032.85	N	N	--
S220-BG1-013	0 - 0.5	soil	SF	grab	NA	3/23/2017	638570.24	4089032.04	N;FD	N;FD	--
S220-BG1-014	0 - 0.5	soil	SF	grab	NA	3/23/2017	638567.81	4089029.96	N	N	--
S220-BG1-015	0 - 0.5	soil	SF	grab	NA	3/23/2017	638567.24	4089034.46	N	N	--
S220-SCX-002	0 - 0.5	soil	SF	grab	NA	10/12/2016	638574.32	4089037.64	N	N	
Background Reference Area Study - Background Area 2											
S220-BG2-001	0 - 0.5	soil	SF	grab	NA	10/3/2016	638277.25	4089011.89	N	N	
S220-BG2-002	0 - 0.5	soil	SF	grab	NA	10/3/2016	638275.88	4089014.38	N	N	
S220-BG2-003	0 - 0.5	soil	SF	grab	NA	10/3/2016	638274.03	4089015.82	N	N	
S220-BG2-004	0 - 0.5	soil	SF	grab	NA	10/3/2016	638271.78	4089014.40	N	N	
S220-BG2-005	0 - 0.5	soil	SF	grab	NA	10/3/2016	638269.87	4089015.77	N	N	
S220-BG2-006	0 - 0.5	soil	SF	grab	NA	10/3/2016	638270.10	4089018.82	N;FD;MS;MSD	N;FD	
S220-BG2-007	0 - 0.5	soil	SF	grab	NA	10/3/2016	638272.82	4089021.06	N	N	
S220-BG2-008	0 - 0.5	soil	SF	grab	NA	10/3/2016	638274.24	4089018.47	N	N	
S220-BG2-009	0 - 0.5	soil	SF	grab	NA	10/3/2016	638276.88	4089019.73	N	N	
S220-BG2-010	0 - 0.5	soil	SF	grab	NA	10/3/2016	638272.51	4089022.39	N	N	
S220-SCX-001	0 - 0.5	soil	SF	grab	NA	10/12/2016	638272.65	4089019.92	N	N	--
S220-SCX-001	0.5 - 1.2	soil	SB	grab	NA	10/12/2016	638272.65	4089019.92	N	N	--
S220-SCX-001	1.2 - 1.8	soil	SB	grab	NA	10/12/2016	638272.65	4089019.92	N	N	--
Background Reference Area Study - Background Area 3											
S220-BG3-001	0 - 0.5	soil	SF	grab	NA	8/26/2017	638345.10	4089447.95	N;MS;MSD	N	--
S220-BG3-002	0 - 0.5	soil	SF	grab	NA	8/26/2017	638341.11	4089446.60	N	N	--
S220-BG3-003	0 - 0.5	soil	SF	grab	NA	8/26/2017	638335.23	4089448.44	N	N	--
S220-BG3-004	0 - 0.5	soil	SF	grab	NA	8/26/2017	638330.04	4089446.30	N	N	--
S220-BG3-005	0 - 0.5	soil	SF	grab	NA	8/26/2017	638325.90	4089447.79	N	N	--
S220-BG3-006	0 - 0.5	soil	SF	grab	NA	8/26/2017	638325.35	4089454.04	N	N	--
S220-BG3-007	0 - 0.5	soil	SF	grab	NA	8/26/2017	638330.34	4089456.79	N	N	--
S220-BG3-008	0 - 0.5	soil	SF	grab	NA	8/26/2017	638335.21	4089453.96	N	N	--
S220-BG3-009	0 - 0.5	soil	SF	grab	NA	8/26/2017	638340.08	4089454.88	N	N	--
S220-BG3-010	0 - 0.5	soil	SF	grab	NA	8/26/2017	638343.94	4089454.20	N;FD	N;FD	--
S220-BG3-011	0 - 0.5	soil	SF	grab	NA	8/26/2017	638339.24	4089451.22	N	N	--
Correlation											
S220-C01-001	0 - 0.5	soil	SF	5-point composite	NA	10/14/2016	638291.69	4089238.48	--	N	N
S220-C02-001	0 - 0.5	soil	SF	5-point composite	NA	10/14/2016	638331.79	4089281.32	--	N	N
S220-C03-001	0 - 0.5	sediment	SF	5-point composite	NA	10/14/2016	638324.65	4089307.59	--	N	N
S220-C04-001	0 - 0.5	sediment	SF	5-point composite	NA	10/14/2016	638287.89	4089330.17	--	N	N
S220-C05-001	0 - 0.5	soil	SF	5-point composite	NA	10/14/2016	638283.33	4089369.23	--	N	N

Notes

--	Not Sampled
N	Normal
FD	Field Duplicate
MS	Matrix Spike
MSD	Matrix Spike Duplicate
Ra-226	Radium 226
NA	Not Applicable
SB	Subsurface Sample
SF	Surface Sample
ft bgs	feet below ground surface

[1] Coordinate System: NAD 1983 UTM Zone 12N

Table 3-1
Soil and Sediment Sampling Summary
Barton 3
Removal Site Evaluation Report - Final
Navajo Nation AUM Environmental Response Trust - First Phase

Sample Location	Sample Depth (ft bgs)	Sample Media	Sample Category	Sample Collection Method	Survey Area	Sample Date	Easting [1]	Northing [1]	Sample Types Metals, Total	Ra-226	Thorium
Characterization											
S220-CX-001	0 - 0.5	soil	SF	grab	B	4/15/2017	638350.50	4089327.71	N	N	--
S220-CX-002	0 - 0.5	soil	SF	grab	B	4/15/2017	638355.25	4089357.13	N;FD	N;FD	--
S220-CX-003	0 - 0.5	soil	SF	grab	B	4/15/2017	638271.71	4089323.86	N	N	--
S220-CX-004	0 - 0.5	soil	SF	grab	B	4/15/2017	638266.95	4089352.24	N	N	--
S220-CX-005	0 - 0.5	soil	SF	grab	B	4/15/2017	638291.20	4089392.56	N	N	--
S220-CX-006	0 - 0.5	soil	SF	grab	B	4/15/2017	638277.67	4089287.61	N;MS;MSD	N	--
S220-CX-007	0 - 0.5	soil	SF	grab	A	4/15/2017	638287.33	4089271.10	N	N	--
S220-CX-008	0 - 0.5	soil	SF	grab	A	4/15/2017	638320.69	4089232.27	N	N	--
S220-CX-009	0 - 0.5	soil	SF	grab	B	4/15/2017	638439.43	4089342.90	N	N	--
S220-CX-010	0 - 0.5	soil	SF	grab	A	4/15/2017	638348.85	4089231.29	N	N	--
S220-SCX-003	0 - 0.5	soil	SF	grab	B	4/15/2017	638371.49	4089266.50	N	N	--
S220-SCX-003	0.5 - 1	soil	SB	grab	B	4/15/2017	638371.49	4089266.50	N	N	--
S220-SCX-003	1 - 1.25	soil	SB	grab	B	4/15/2017	638371.49	4089266.50	N	N	--
S220-SCX-004	0 - 0.5	soil	SF	grab	A	4/15/2017	638340.21	4089272.96	N;FD	N;FD	--
S220-SCX-005	0 - 0.5	soil	SF	grab	A	4/15/2017	638304.81	4089276.97	N	N	--
S220-SCX-006	0 - 0.5	soil	SF	grab	A	4/15/2017	638289.84	4089271.59	N;MS;MSD	N	--
S220-SCX-006	1.5 - 2	soil	SB	grab	A	4/15/2017	638289.84	4089271.59	N	N	--
S220-SCX-006	2 - 2.5	soil	SB	grab	A	4/15/2017	638289.84	4089271.59	N	N	--
S220-SCX-007	0 - 0.75	soil	SB	grab	A	4/17/2017	638297.67	4089207.65	N	N	--
S220-SCX-008	0 - 0.5	sediment	SF	grab	B	6/6/2017	638255.57	4089305.24	N	N	--
S220-SCX-008	0.5 - 1.5	sediment	SB	grab	B	6/6/2017	638255.57	4089305.24	N;FD	N;FD	--
S220-SCX-009	0 - 0.5	sediment	SF	grab	B	6/6/2017	638294.14	4089308.78	N	N	--
S220-SCX-009	0.5 - 2	sediment	SB	composite	B	6/6/2017	638294.14	4089308.78	N	N	--
S220-SCX-010	0 - 0.5	sediment	SF	grab	B	6/7/2017	638278.35	4089341.11	N	N	--
S220-SCX-010	0.5 - 3.5	sediment	SB	composite	B	6/7/2017	638278.35	4089341.11	N	N	--
S220-SCX-011	0 - 0.5	soil	SF	grab	B	6/7/2017	638271.15	4089363.87	N	N	--
S220-SCX-011	0.5 - 12.5	soil	SB	composite	B	6/7/2017	638271.15	4089363.87	N	N	--
S220-SCX-012	0 - 0.5	soil	SF	grab	B	6/7/2017	638311.96	4089342.54	N	N	--
S220-SCX-012	0.5 - 2.5	soil	SB	composite	B	6/7/2017	638311.96	4089342.54	N;FD	N;FD	--
S220-SCX-013	0 - 0.5	soil	SF	grab	A	6/7/2017	638318.65	4089293.28	N	N	--
S220-SCX-013	0.8 - 1.8	soil	SB	grab	A	6/7/2017	638318.65	4089293.28	N;MS;MSD	N	--
S220-SCX-014	0 - 0.5	soil	SF	grab	A	6/7/2017	638327.94	4089292.91	N	N	--
S220-SCX-014	0.5 - 1	soil	SB	grab	A	6/7/2017	638327.94	4089292.91	N	N	--
S220-SCX-015	0 - 0.5	soil	SF	grab	A	6/7/2017	638356.12	4089291.96	N	N	--
S220-SCX-015	0.5 - 1	soil	SB	grab	A	6/7/2017	638356.12	4089291.96	N	N	--
S220-SCX-015	1.25 - 2	soil	SB	grab	A	6/7/2017	638356.12	4089291.96	N	N	--
S220-SCX-016	0 - 0.5	soil	SF	grab	A	6/7/2017	638343.95	4089291.99	N	N	--
S220-SCX-016	0.5 - 0.8	soil	SB	grab	A	6/7/2017	638343.95	4089291.99	N	N	--
S220-SCX-016	1 - 2	soil	SB	grab	A	6/7/2017	638343.95	4089291.99	N	N	--
S220-SCX-016	2 - 3	soil	SB	grab	A	6/7/2017	638343.95	4089291.99	N	N	--
S220-SCX-017	0 - 0.5	soil	SF	grab	B	6/7/2017	638392.48	4089299.91	N	N	--
S220-SCX-017	0.5 - 4	soil	SB	composite	B	6/7/2017	638392.48	4089299.91	N;FD	N;FD	--
S220-SCX-017	4 - 9	soil	SB	composite	B	6/7/2017	638392.48	4089299.91	N	N	--
S220-SCX-017	9 - 12	soil/bedrock	SB	composite	B	6/7/2017	638392.48	4089299.91	N	N	--
S220-SCX-018	0 - 0.5	soil	SF	grab	B	6/7/2017	638404.71	4089276.01	N	N	--
S220-SCX-018	0.5 - 4	soil	SB	composite	B	6/7/2017	638404.71	4089276.01	N	N	--
S220-SCX-018	4 - 7	soil	SB	composite	B	6/7/2017	638404.71	4089276.01	N	N	--
S220-SCX-019	0 - 0.5	soil	SF	grab	B	6/8/2017	638425.76	4089303.12	N	N	--
S220-SCX-019	0.5 - 7.5	soil	SB	composite	B	6/8/2017	638425.76	4089303.12	N	N	--
S220-SCX-019	11 - 15.5	soil	SB	composite	B	6/8/2017	638425.76	4089303.12	N	N	--
S220-SCX-019	7.5 - 11	soil	SB	composite	B	6/8/2017	638425.76	4089303.12	N	N	--
S220-SCX-020	0 - 0.5	soil	SF	grab	B	6/8/2017	638393.81	4089339.43	N;FD	N;FD	--
S220-SCX-020	0.5 - 2.5	soil	SB	composite	B	6/8/2017	638393.81	4089339.43	N	N	--
S220-SCX-021	0 - 0.5	soil	SF	grab	B	6/8/2017	638381.35	4089324.89	N;MS;MSD	N	--
S220-SCX-021	0.5 - 2	soil/bedrock	SB	composite	B	6/8/2017	638381.35	4089324.89	N	N	--
S220-SCX-022	0 - 0.5	soil	SF	grab	B	6/8/2017	638455.21	4089303.19	N	N	--
S220-SCX-022	19 - 20	soil	SB	composite	B	6/8/2017	638455.21	4089303.19	N	N	--
S220-SCX-022	5 - 10	soil	SB	composite	B	6/8/2017	638455.21	4089303.19	N	N	--
S220-SCX-023	0 - 0.5	soil	SF	grab	B	6/6/2017	638254.60	4089337.98	N	N	--
S220-SCX-023	0.5 - 2	soil	SB	composite	B	6/6/2017	638254.60	4089337.98	N	N	--

Notes

--	Not Sampled
N	Normal
FD	Field Duplicate
MS	Matrix Spike
MSD	Matrix Spike Duplicate
Ra-226	Radium 226
NA	Not Applicable
SB	Subsurface Sample
SF	Surface Sample
ft bgs	feet below ground surface

[1] Coordinate System: NAD 1983 UTM Zone 12N

Table 3-2
Mine Feature Samples and Area
Barton 3
Removal Site Evaluation Report - Final
Navajo Nation AUM Environmental Response Trust - First Phase

Mine Feature	Surface Samples	Subsurface Samples	Area (sq. ft)	Volume of TENORM exceeding ILs (yd^3)	Feature Notes
Graded/Disturbed Reclaimed Area	6	9	21,179	1,569	--
Excavation (Depth 1)	5	2	28,432	2,737	Volume calculated assuming an area of the TENORM exceeding the ILs extended to 10 ft bgs
Excavation (Depth 2)	5	2	28,432	2,106	Volume calculated assuming an area of TENORM exceeding the ILs extended to 2 ft bgs
Waste Pile 1	1	1	1,751	130	--
Berm	0	0	813	60	--
Drainages	3	3	*	546	Volume calculated assuming drainages are 8 ft wide.
Potential Haul Roads (Depth 1)	2	0	**	1,761	Volume calculated assuming an area of the TENORM exceeding the ILs extended to 10 ft bgs
Potential Haul Roads (Depth 2)	2	0	**	1,000	Volume calculated assuming an area of TENORM exceeding the ILs extended to 2 ft bgs

Notes

sq.ft - square feet

yd^3 - cubic yards

ILs - investigation levels

TENORM - technologically enhanced naturally occurring radioactive material

* Area not determined because the width of the drainages vary throughout the Site

** Area not determined because the widths of the potential haul roads vary throughout the Site

-- not applicable

Table 4-1
Background Reference Area Soil Sample Analytical Results
Barton 3
Removal Site Evaluation Report - Final
Navajo Nation AUM Environmental Response Trust - First Phase

Location Identification	S220-BG1-001	S220-BG1-002	S220-BG1-003	S220-BG1-004	S220-BG1-005	S220-BG1-006	S220-BG1-007	S220-BG1-007 Dup	S220-BG1-008	S220-BG1-009	S220-BG1-010	S220-BG1-011
Date Collected	10/6/2016	10/6/2016	10/6/2016	10/6/2016	10/6/2016	10/6/2016	10/6/2016	10/6/2016	10/6/2016	10/6/2016	10/6/2016	3/23/2017
Depth (feet)	0 - 0.5	0 - 0.5	0 - 0.5	0 - 0.5	0 - 0.5	0 - 0.5	0 - 0.5	0 - 0.5	0 - 0.5	0 - 0.5	0 - 0.5	0 - 0.5
Analyte (Units)												
Metals[1] (mg/kg)												
Arsenic	1.5	1.1	1.2	1.9	2.1	1.8	1.6	1.8	1.3	3.8	3.1	1.2
Molybdenum	0.18	<0.17	<0.17	<0.2	<0.2	0.2	<0.19	0.25	<0.19	<0.18	0.28	<0.2
Selenium	<0.87	<0.87	<0.87	<1	<0.99	<0.91	<0.96	<0.91	<0.94	<0.92	<0.97	<1
Uranium	1.7	1.4	1.4	1.5	2.3	2.7	2.2 J+	2.3	1.4	6.8	4.3	1.2
Vanadium	7.1	5.9	6.5	6.1	8.4	7.3	7.3	7.4	6.3	19	10	6.4
Radionuclides (pCi/g)												
Radium-226	3.68 ± 0.55 J-	1.44 ± 0.27	1.63 ± 0.31 J-	2.11 ± 0.37 J-	2.4 ± 0.38	3.65 ± 0.55	2.15 ± 0.36	1.73 ± 0.34	1.39 ± 0.28	3.66 ± 0.54	6.61 ± 0.9	1.19 ± 0.25

Notes
Bold Bolded result indicates positively identified compound
mg/kg milligrams per kilogram
pCi/g picocuries per gram
[1] Analysis required a standard sample dilution of 10 times; reported values have been converted to non-dilute value
< Result not detected above associated laboratory reporting limit
J- Data are estimated and are potentially biased low due to associated quality control data
J+ Data are estimated and are potentially biased high due to associated quality control data

Stantec
NAVAJO NATION AUM Environmental Response Trust - First Phase

Table 4-1
Background Reference Area Soil Sample Analytical Results
Barton 3
Removal Site Evaluation Report - Final
Navajo Nation AUM Environmental Response Trust - First Phase

Location Identification	S220-BG1-012	S220-BG1-013	S220-BG1-013 Dup	S220-BG1-014	S220-BG1-015	S220-BG2-001	S220-SCX-002	S220-BG2-002	S220-BG2-003	S220-BG2-004
Date Collected	3/23/2017	3/23/2017	3/23/2017	3/23/2017	3/23/2017	10/3/2016	10/12/2016	10/3/2016	10/3/2016	10/3/2016
Depth (feet)	0 - 0.5	0 - 0.5	0 - 0.5	0 - 0.5	0 - 0.5	0 - 0.5	0 - 0.5	0 - 0.5	0 - 0.5	0 - 0.5
Analyte (Units)										
Metals[1] (mg/kg)										
Arsenic	2.3	1.9	1.8	0.9	2.5	1.3	2	1.7	1.6	1.6
Molybdenum	0.29	<0.17	<0.17	<0.16	<0.18	<0.2	0.19	<0.19	<0.2	0.68
Selenium	<0.94	<0.87	<0.87	<0.78	<0.89	<0.98	<0.9	<0.94	<1	<0.96
Uranium	2.2	1.8	1.7	0.96	2.1	0.53	2.8	0.66	0.66	0.64
Vanadium	7.2	7.4	6.9	4.7	6.9	8.7	8.7	10	11	9.5
Radionuclides (pCi/g)										
Radium-226	13.4 ± 1.7	3.73 ± 0.57	3.69 ± 0.53	0.9 ± 0.25	1.77 ± 0.32	0.92 ± 0.22	2.11 ± 0.35	1.01 ± 0.25	0.87 ± 0.26	0.87 ± 0.21

Notes
Bold Bolded result indicates positively identified compound
mg/kg milligrams per kilogram
pCi/g picocuries per gram
[1] Analysis required a standard sample dilution of 10 times; reported values have been converted to non-dilute value
< Result not detected above associated laboratory reporting limit
J- Data are estimated and are potentially biased low due to associated quality control data
J+ Data are estimated and are potentially biased high due to associated quality control data

Table 4-1
Background Reference Area Soil Sample Analytical Results
Barton 3
Removal Site Evaluation Report - Final
Navajo Nation AUM Environmental Response Trust - First Phase

Location Identification	S220-BG2-005	S220-BG2-006	S220-BG2-006 Dup	S220-BG2-007	S220-BG2-008	S220-BG2-009	S220-BG2-010	S220-SCX-001	S220-SCX-001	S220-SCX-001	S220-BG3-001	S220-BG3-002
Date Collected	10/3/2016	10/3/2016	10/3/2016	10/3/2016	10/3/2016	10/3/2016	10/3/2016	10/12/2016	10/12/2016	10/12/2016	8/26/2017	8/26/2017
Depth (feet)	0 - 0.5	0 - 0.5	0 - 0.5	0 - 0.5	0 - 0.5	0 - 0.5	0 - 0.5	0 - 0.5	0.5 - 1.2	1.2 - 1.8	0 - 0.5	0 - 0.5
Analyte (Units)												
Metals[1] (mg/kg)												
Arsenic	1.3	1.4	1.3	1.6	1.1	1.2	1.2	1.7	1.8	1.9	0.94	0.9
Molybdenum	<0.2	<0.2	0.22	<0.19	<0.18	<0.2	<0.19	0.21	<0.18	<0.18	0.3	0.26
Selenium	<1	<1	<0.95	<0.93	<0.92	<0.98	<0.94	<1	<0.88	<0.9	<0.95	<0.99
Uranium	0.62	0.61	0.63	0.64	0.55	0.5	0.6	0.5	0.49	0.45	0.92	0.94
Vanadium	9.1	9.6	9.6	10	8.3	7.7	8.7	8.6	8.5	8.5	10 J+	9.9
Radionuclides (pCi/g)												
Radium-226	0.92 ± 0.24	0.91 ± 0.25	0.99 ± 0.23	0.97 ± 0.25	0.79 ± 0.22	0.83 ± 0.21	1.06 ± 0.25	0.77 ± 0.22	0.59 ± 0.21	0.69 ± 0.21	1.4 ± 0.3	1.32 ± 0.27

Notes
Bold Bolded result indicates positively identified compound
mg/kg milligrams per kilogram
pCi/g picocuries per gram
[1] Analysis required a standard sample dilution of 10 times; reported values have been converted to non-dilute value
< Result not detected above associated laboratory reporting limit
J- Data are estimated and are potentially biased low due to associated quality control data
J+ Data are estimated and are potentially biased high due to associated quality control data

Table 4-1
Background Reference Area Soil Sample Analytical Results
Barton 3
Removal Site Evaluation Report - Final
Navajo Nation AUM Environmental Response Trust - First Phase

Location Identification	S220-BG3-003	S220-BG3-004	S220-BG3-005	S220-BG3-006	S220-BG3-007	S220-BG3-008	S220-BG3-009	S220-BG3-010	S220-BG3-010 Dup	S220-BG3-011
Date Collected	8/26/2017	8/26/2017	8/26/2017	8/26/2017	8/26/2017	8/26/2017	8/26/2017	8/26/2017	8/26/2017	8/26/2017
Depth (feet)	0 - 0.5	0 - 0.5	0 - 0.5	0 - 0.5	0 - 0.5	0 - 0.5	0 - 0.5	0 - 0.5	0 - 0.5	0 - 0.5
Analyte (Units)										
Metals[1] (mg/kg)										
Arsenic	1.4	1	1.1	0.95	0.98	1	1.1	0.99	0.98	1.3
Molybdenum	0.3	0.29	0.33	0.25	0.27	0.31	0.3	0.25	0.29	0.32
Selenium	<0.99	<1	<0.99	<0.99	<0.93	<0.99	<1	<0.97	<1	<0.95
Uranium	0.99	1	1	0.91	1	1.1	1	0.96	1	0.97
Vanadium	11	10	11	10	11	11	12	9.9	10	11
Radionuclides (pCi/g)										
Radium-226	1.63 ± 0.3	1.49 ± 0.29	1.58 ± 0.31	1.45 ± 0.29	1.24 ± 0.3	1.35 ± 0.29	1.4 ± 0.28	1.54 ± 0.32	1.41 ± 0.28	1.48 ± 0.28

Notes
Bold Bolded result indicates positively identified compound
mg/kg milligrams per kilogram
pCi/g picocuries per gram
[1] Analysis required a standard sample dilution of 10 times; reported values have been converted to non-dilute value
< Result not detected above associated laboratory reporting limit
J- Data are estimated and are potentially biased low due to associated quality control data
J+ Data are estimated and are potentially biased high due to associated quality control data

Stantec
NAVAJO NATION AUM Environmental Response Trust - First Phase

Table 4-2
Static Gamma Measurement Summary
Barton 3
Removal Site Evaluation Report - Final
Navajo Nation AUM Environmental Response Trust - First Phase

Sample Location	Survey Area	Subsurface Static Gamma Investigation Level (cpm)	Sample Depth (ft bgs)	Media	Static Gamma Measurement (cpm)
S220-SCX-001	Background Area 2	*	0.5	soil	7,171
S220-SCX-001	Background Area 2	*	1.0	soil	7,270
S220-SCX-001	Background Area 2	*	1.5	soil	7,280
S220-SCX-001	Background Area 2	*	1.8	soil	7,761**
S220-BG3-011	Background Area 3	*	0.0	soil	9,313
S220-BG3-011	Background Area 3	*	0.5	soil	11,112**
S220-SCX-004	A	--	0.0	soil	16,949
S220-SCX-004	A	7,270	0.5	soil	71,103**
S220-SCX-005	A	--	0.0	soil	14,880
S220-SCX-005	A	7,270	0.5	soil	20,644
S220-SCX-005	A	7,270	0.8	soil	23,434**
S220-SCX-006	A	--	0.0	soil	15,879
S220-SCX-006	A	7,270	0.5	soil	28,300
S220-SCX-006	A	7,270	1.0	soil	36,304
S220-SCX-006	A	7,270	1.5	soil	46,199
S220-SCX-006	A	7,270	2.0	soil	76,140
S220-SCX-006	A	7,270	2.5	soil	166,611**
S220-SCX-007	A	--	0.0	soil	6,804
S220-SCX-007	A	7,270	0.5	soil	6,359
S220-SCX-007	A	7,270	0.8	soil	6,296**
S220-SCX-013	A	--	0.0	soil	38,730
S220-SCX-013	A	7,270	1.0	soil	161,238
S220-SCX-013	A	7,270	2.0	bedrock	225,896
S220-SCX-013	A	7,270	2.5	bedrock	318,434
S220-SCX-014	A	--	0.0	soil	31,102
S220-SCX-014	A	7,270	1.0	soil	130,520
S220-SCX-014	A	7,270	2.0	bedrock	153,278
S220-SCX-014	A	7,270	3.0	bedrock	199,862
S220-SCX-014	A	7,270	4.0	bedrock	230,440
S220-SCX-015	A	--	0.0	soil	43,334
S220-SCX-015	A	7,270	1.0	soil	168,028
S220-SCX-015	A	7,270	2.0	soil	258,420
S220-SCX-016	A	--	0.0	soil	20,614
S220-SCX-016	A	7,270	1.0	soil	22,848
S220-SCX-016	A	7,270	2.0	soil	480,338
S220-SCX-016	A	7,270	3.0	soil	581,372
S220-SCX-016	A	7,270	4.0	bedrock	136,978
S220-SCX-016	A	7,270	4.5	bedrock	13,362
S220-SCX-003	B	--	0.0	soil	14,894
S220-SCX-003	B	11,112	0.5	soil	17,587
S220-SCX-003	B	11,112	1.3	soil	12,609**

Notes

Bold	Bolded result indicates measurement exceeds subsurface gamma investigation level
*	The subsurface gamma investigation levels are derived from the background area measurements, refer to Section 4.1 of the RSE report
**	Measurement collected at interface of unconsolidated material and refusal material (e.g., bedrock)
--	The subsurface gamma investigation level does not apply to surface static gamma measurements
RSE	Removal Site Investigation
cpm	counts per minute
ft bgs	feet below ground surface

Table 4-2
Static Gamma Measurement Summary
Barton 3
Removal Site Evaluation Report - Final
Navajo Nation AUM Environmental Response Trust - First Phase

Sample Location	Survey Area	Subsurface Static Gamma Investigation Level (cpm)	Sample Depth (ft bgs)	Media	Static Gamma Measurement (cpm)
S220-SCX-008	B	--	0.0	sediment	9,406
S220-SCX-008	B	11,112	1.0	sediment	13,940
S220-SCX-008	B	11,112	2.0	bedrock	20,440
S220-SCX-008	B	11,112	3.0	bedrock	26,742
S220-SCX-009	B	--	0.0	sediment	17,968
S220-SCX-009	B	11,112	0.5	sediment	28,284
S220-SCX-009	B	11,112	1.5	sediment	39,114
S220-SCX-009	B	11,112	2.5	bedrock	32,948
S220-SCX-010	B	--	0.0	sediment	18,596
S220-SCX-010	B	11,112	1.0	sediment	26,314
S220-SCX-010	B	11,112	2.0	sediment	26,722
S220-SCX-010	B	11,112	3.0	sediment	22,477
S220-SCX-010	B	11,112	4.0	bedrock	18,224
S220-SCX-011	B	--	0.0	soil	11,902
S220-SCX-011	B	11,112	1.0	soil	20,198
S220-SCX-011	B	11,112	2.0	soil	23,574
S220-SCX-011	B	11,112	3.0	soil	24,446
S220-SCX-011	B	11,112	4.0	soil	21,836
S220-SCX-011	B	11,112	5.0	soil	19,952
S220-SCX-011	B	11,112	6.0	soil	18,176
S220-SCX-011	B	11,112	7.0	soil	18,902
S220-SCX-011	B	11,112	8.0	soil	20,456
S220-SCX-011	B	11,112	9.0	soil	14,588
S220-SCX-011	B	11,112	10.0	soil	13,946
S220-SCX-011	B	11,112	11.0	soil	14,982
S220-SCX-011	B	11,112	12.0	soil	16,014
S220-SCX-011	B	11,112	13.0	bedrock	16,498
S220-SCX-011	B	11,112	14.0	bedrock	15,572
S220-SCX-012	B	--	0.0	soil	16,048
S220-SCX-012	B	11,112	1.0	soil	27,364
S220-SCX-012	B	11,112	2.0	soil	12,280
S220-SCX-012	B	11,112	3.0	bedrock	8,416
S220-SCX-012	B	11,112	4.0	bedrock	8,802
S220-SCX-017	B	--	0.0	soil	18,682
S220-SCX-017	B	11,112	1.0	soil	31,938
S220-SCX-017	B	11,112	2.0	soil	32,882
S220-SCX-017	B	11,112	3.0	soil	37,316
S220-SCX-017	B	11,112	4.0	soil	36,758
S220-SCX-017	B	11,112	5.0	soil	17,922
S220-SCX-017	B	11,112	6.0	soil	13,854
S220-SCX-017	B	11,112	7.0	soil	13,512
S220-SCX-017	B	11,112	8.0	soil	12,964
S220-SCX-017	B	11,112	9.0	soil	13,392
S220-SCX-017	B	11,112	10.0	soil	16,250
S220-SCX-017	B	11,112	11.0	bedrock	19,588
S220-SCX-017	B	11,112	12.0	bedrock	19,492

Notes

Bold	Bolded result indicates measurement exceeds subsurface gamma investigation level
*	The subsurface gamma investigation levels are derived from the background area measurements, refer to Section 4.1 of the RSE report
**	Measurement collected at interface of unconsolidated material and refusal material (e.g., bedrock)
--	The subsurface gamma investigation level does not apply to surface static gamma measurements
RSE	Removal Site Investigation
cpm	counts per minute
ft bgs	feet below ground surface

Table 4-2
Static Gamma Measurement Summary
Barton 3
Removal Site Evaluation Report - Final
Navajo Nation AUM Environmental Response Trust - First Phase

Sample Location	Survey Area	Subsurface Static Gamma Investigation Level (cpm)	Sample Depth (ft bgs)	Media	Static Gamma Measurement (cpm)
S220-SCX-018	B	--	0.0	soil	11,724
S220-SCX-018	B	11,112	1.0	soil	17,520
S220-SCX-018	B	11,112	2.0	soil	17,662
S220-SCX-018	B	11,112	3.0	soil	15,764
S220-SCX-018	B	11,112	4.0	soil	16,248
S220-SCX-018	B	11,112	5.0	soil	16,182
S220-SCX-018	B	11,112	6.0	soil	15,202
S220-SCX-018	B	11,112	7.0	soil	15,462
S220-SCX-018	B	11,112	8.0	bedrock	16,396
S220-SCX-018	B	11,112	9.0	bedrock	18,954
S220-SCX-018	B	11,112	10.0	bedrock	19,624
S220-SCX-018	B	11,112	11.0	bedrock	10,354
S220-SCX-018	B	11,112	12.0	bedrock	8,950
S220-SCX-019	B	--	0.0	soil	15,514
S220-SCX-019	B	11,112	1.0	soil	26,882
S220-SCX-019	B	11,112	2.0	soil	19,658
S220-SCX-019	B	11,112	3.0	soil	13,542
S220-SCX-019	B	11,112	4.0	soil	11,262
S220-SCX-019	B	11,112	5.0	soil	11,562
S220-SCX-019	B	11,112	6.0	soil	12,068
S220-SCX-019	B	11,112	7.0	soil	12,392
S220-SCX-019	B	11,112	8.0	soil	12,362
S220-SCX-019	B	11,112	9.0	soil	12,624
S220-SCX-019	B	11,112	10.0	soil	12,866
S220-SCX-019	B	11,112	11.0	soil	15,300
S220-SCX-019	B	11,112	12.0	soil	21,880
S220-SCX-019	B	11,112	13.0	soil	35,580
S220-SCX-019	B	11,112	14.0	soil	17,444
S220-SCX-019	B	11,112	15.0	soil	11,020
S220-SCX-019	B	11,112	16.0	bedrock	9,028
S220-SCX-019	B	11,112	16.5	bedrock	9,504
S220-SCX-020	B	--	0.0	soil	13,644
S220-SCX-020	B	11,112	1.0	soil	25,502
S220-SCX-020	B	11,112	2.0	soil	24,990
S220-SCX-020	B	11,112	3.0	bedrock	18,994
S220-SCX-021	B	--	0.0	soil	16,076
S220-SCX-021	B	11,112	1.0	soil	30,796
S220-SCX-021	B	11,112	2.0	soil	34,790
S220-SCX-021	B	11,112	3.0	bedrock	25,620

Notes

Bold	Bolded result indicates measurement exceeds subsurface gamma investigation level
*	The subsurface gamma investigation levels are derived from the background area measurements, refer to Section 4.1 of the RSE report
**	Measurement collected at interface of unconsolidated material and refusal material (e.g., bedrock)
--	The subsurface gamma investigation level does not apply to surface static gamma measurements
RSE	Removal Site Investigation
cpm	counts per minute
ft bgs	feet below ground surface

Table 4-2
Static Gamma Measurement Summary
Barton 3
Removal Site Evaluation Report - Final
Navajo Nation AUM Environmental Response Trust - First Phase

Sample Location	Survey Area	Subsurface Static Gamma Investigation Level (cpm)	Sample Depth (ft bgs)	Media	Static Gamma Measurement (cpm)
S220-SCX-022	B	--	0.0	soil	9,048
S220-SCX-022	B	11,112	1.0	soil	13,102
S220-SCX-022	B	11,112	2.0	soil	16,796
S220-SCX-022	B	11,112	3.0	soil	17,106
S220-SCX-022	B	11,112	4.0	soil	17,634
S220-SCX-022	B	11,112	5.0	soil	19,038
S220-SCX-022	B	11,112	6.0	soil	21,812
S220-SCX-022	B	11,112	7.0	soil	22,898
S220-SCX-022	B	11,112	8.0	soil	22,638
S220-SCX-022	B	11,112	9.0	soil	17,232
S220-SCX-022	B	11,112	10.0	soil	14,420
S220-SCX-022	B	11,112	11.0	soil	14,314
S220-SCX-022	B	11,112	12.0	soil	14,300
S220-SCX-022	B	11,112	13.0	soil	13,840
S220-SCX-022	B	11,112	14.0	soil	127,004
S220-SCX-022	B	11,112	15.0	soil	10,696
S220-SCX-022	B	11,112	16.0	soil	11,070
S220-SCX-022	B	11,112	17.0	soil	13,038
S220-SCX-022	B	11,112	18.0	soil	14,196
S220-SCX-022	B	11,112	19.0	soil	15,578
S220-SCX-022	B	11,112	20.0	soil	19,814
S220-SCX-022	B	11,112	21.0	soil	24,070
S220-SCX-022	B	11,112	22.0	bedrock	17,590
S220-SCX-023	B	--	0.0	soil	9,082
S220-SCX-023	B	11,112	1.0	soil	12,848
S220-SCX-023	B	11,112	2.0	soil	13,190
S220-SCX-023	B	11,112	3.0	bedrock	11,336
S220-SCX-023	B	11,112	4.0	bedrock	10,852
S220-SCX-023	B	11,112	5.0	bedrock	10,406
S220-SCX-023	B	11,112	6.0	bedrock	10,568
S220-SCX-023	B	11,112	7.0	bedrock	11,358

Notes

Bold	Bolded result indicates measurement exceeds subsurface gamma investigation level
*	The subsurface gamma investigation levels are derived from the background area measurements, refer to Section 4.1 of the RSE report
**	Measurement collected at interface of unconsolidated material and refusal material (e.g., bedrock)
--	The subsurface gamma investigation level does not apply to surface static gamma measurements
RSE	Removal Site Investigation
cpm	counts per minute
ft bgs	feet below ground surface

Table 4-3
Gamma Correlation Study Soil and Sediment Sample Analytical Results
Barton 3
Removal Site Evaluation Report - Final
Navajo Nation AUM Environmental Response Trust - First Phase

Location Identification	S220-C01-001	S220-C02-001	S220-C03-001	S220-C04-001	S220-C05-001
Date Collected	10/14/2016	10/14/2016	10/14/2016	10/14/2016	10/14/2016
Depth (feet)	0 - 0.5	0 - 0.5	0 - 0.5	0 - 0.5	0 - 0.5
Analyte (Units)					
Radionuclides (pCi/g)					
Radium-226	0.98 ± 0.26	6.44 ± 0.84	10.6 ± 1.4	6.73 ± 0.89 J-	3.52 ± 0.51
Thorium-228	0.416 ± 0.086	0.285 ± 0.065	0.256 ± 0.059	0.207 ± 0.055	0.315 ± 0.07
Thorium-230	0.92 ± 0.17	4.85 ± 0.77	9.3 ± 1.4	6.13 ± 0.97	2.92 ± 0.47
Thorium-232	0.459 ± 0.09	0.278 ± 0.062	0.258 ± 0.058	0.262 ± 0.062	0.274 ± 0.061

Notes
Bold Bolded result indicates positively identified compound
pCi/g picocuries per gram
J- Data are estimated and are potentially biased low due to associated quality control data.

Table 4-4a
Site Characterization Soil Sample Analytical Results for Survey Area A
Barton 3
Removal Site Evaluation Report - Final
Navajo Nation AUM Environmental Response Trust - First Phase

Location Identification		S220-CX-007	S220-CX-008	S220-CX-010	S220-SCX-004	S220-SCX-004 Dup	S220-SCX-005	S220-SCX-006	S220-SCX-006	S220-SCX-006	S220-SCX-007	S220-SCX-013
Date Collected		4/15/2017	4/15/2017	4/15/2017	4/15/2017	4/15/2017	4/15/2017	4/15/2017	4/15/2017	4/15/2017	4/17/2017	6/7/2017
Depth (feet)		0 - 0.5	0 - 0.5	0 - 0.5	0 - 0.5	0 - 0.5	0 - 0.5	0 - 0.5	1.5 - 2.0	2.0 - 2.5	0 - 0.75	0 - 0.5
Sample Category		surface	surface	surface	surface	surface	surface	surface	subsurface	subsurface	subsurface	surface
Sample Collection Method		grab	grab	grab	grab	grab	grab	grab	grab	grab	grab	grab
Media		soil	soil	soil	soil	soil	soil	soil	soil	soil	soil	soil
Analyte (Units)	Investigation Level											
Metals[1] (mg/kg)												
Arsenic	3.83	2.2	1.1	17	5.5	5	2.3	2.2	1.8	21	2.4	4.5
Molybdenum	0.332	0.85	<0.2	1.1	2.7	2	0.37	1.1	0.84	11	0.22	1.4
Selenium	NA	<0.95	<0.99	1.6	<1	<1.1	<1	<1	<1	<0.95	<1	<0.95
Uranium	6.36	2.6	2.2	21	4.2	4.1	3.4	3.2	2	87	1.1	5.8
Vanadium	16	44	5.7	83	21	24	21	57	38	340	12	81
Radionuclides (pCi/g)												
Radium-226	11.8	6.86 ± 0.93	1.65 ± 0.32	24.6 ± 3	5.86 ± 0.78	6.18 ± 0.86	4.62 ± 0.65	7.23 ± 0.95	3.13 ± 0.49	56.3 ± 6.7	1.04 ± 0.24	26.5 ± 3.2 J-

Notes

Bold	Bolded result indicates positively identified compound
Shaded	Shaded result indicates result greater than or equal to the investigation level
Shaded	Shaded result indicates analyte detected, where that analyte does not have an investigation level
mg/kg	milligrams per kilogram
pCi/g	picocuries per gram
NA	An investigation level is not identified because selenium sample results in BG-1 were all non-detect
1	Analysis required a standard sample dilution of 10 times; reported values have been converted to non-diluted value
<	Result not detected above associated laboratory reporting limit
J	Data are estimated due to associated quality control data
J-	Data are estimated and are potentially biased low due to associated quality control data

Table 4-4a
Site Characterization Soil Sample Analytical Results for Survey Area A
Barton 3
Removal Site Evaluation Report - Final
Navajo Nation AUM Environmental Response Trust - First Phase

Location Identification		S220-SCX-013	S220-SCX-014	S220-SCX-014	S220-SCX-015	S220-SCX-015	S220-SCX-015	S220-SCX-016	S220-SCX-016	S220-SCX-016	S220-SCX-016
Date Collected		6/7/2017	6/7/2017	6/7/2017	6/7/2017	6/7/2017	6/7/2017	6/7/2017	6/7/2017	6/7/2017	6/7/2017
Depth (feet)		0.8 - 1.8	0 - 0.5	0.5 - 1.0	0 - 0.5	0.5 - 1.0	1.25 - 2.0	0 - 0.5	0.5 - 0.8	1.0 - 2.0	2.0 - 3.0
Sample Category		subsurface	surface	subsurface	surface	subsurface	subsurface	surface	subsurface	subsurface	subsurface
Sample Collection Method		grab	grab	grab	grab	grab	grab	grab	grab	grab	grab
Media		soil	soil	soil	soil	soil	soil	soil	soil	soil	soil
Analyte (Units)	Investigation Level										
Metals[1] (mg/kg)											
Arsenic	3.83	16 J-	3.9	2.8	7.2	42	130	3.5	5.8	730	540
Molybdenum	0.332	2 J	2.5	1.4	6.6	37	140	1.6	3.9	630	510
Selenium	NA	<0.99	<1	<1	<0.99	<0.97	2	<0.99	<1	8.4	5.5
Uranium	6.36	15	4.2	4.2	4.8	8.8	22	3	3.1	75	91
Vanadium	16	100	68	54	67	94	290	50	47	290	220
Radionuclides (pCi/g)											
Radium-226	11.8	75.6 ± 9	8.4 ± 1.1	10 ± 1.3	11.8 ± 1.5	33.2 ± 4.1	78.4 ± 9.3	7.16 ± 0.93	8.2 ± 1.1	36.9 ± 4.4	206 ± 24

Notes

Bold	Bolded result indicates positively identified compound
Shaded	Shaded result indicates result greater than or equal to the investigation level
Shaded	Shaded result indicates analyte detected, where that analyte does not have an investigation level
mg/kg	milligrams per kilogram
pCi/g	picocuries per gram
NA	An investigation level is not identified because selenium sample results in BG-1 were all non-detect
1	Analysis required a standard sample dilution of 10 times; reported values have been converted to non-diluted value
<	Result not detected above associated laboratory reporting limit
J	Data are estimated due to associated quality control data
J-	Data are estimated and are potentially biased low due to associated quality control data

Table 4-4b
Site Characterization Soil and Sediment Sample Analytical Results for Survey Area B
Barton 3
Removal Site Evaluation Report - Final
Navajo Nation AUM Environmental Response Trust - First Phase

Location Identification		S220-CX-001	S220-CX-002	S220-CX-002 Dup	S220-CX-003	S220-CX-004	S220-CX-005	S220-CX-006	S220-CX-009	S220-SCX-003	S220-SCX-003	S220-SCX-003	S220-SCX-008
Date Collected		4/15/2017	4/15/2017	4/15/2017	4/15/2017	4/15/2017	4/15/2017	4/15/2017	4/15/2017	4/15/2017	4/15/2017	4/15/2017	6/6/2017
Depth (feet)		0 - 0.5	0 - 0.5	0 - 0.5	0 - 0.5	0 - 0.5	0 - 0.5	0 - 0.5	0 - 0.5	0 - 0.5	0.5 - 1	1 - 1.25	0 - 0.5
Sample Category		surface	surface	surface	surface	surface	surface	surface	surface	surface	subsurface	subsurface	surface
Sample Collection Method		grab	grab	grab	grab	grab	grab	grab	grab	grab	grab	grab	grab
Media		soil	soil	soil	soil	soil	soil	soil	soil	soil	soil	soil	sediment
Analyte (Units)	Investigation Level												
Metals[1] (mg/kg)													
Arsenic	1.5	4.1	1.6	1.9	1.9	2.6	1.3	2.2	1.3	1.8	1.4	1.3	1.2
Molybdenum	0.367	1.9	1.2	1.7	0.59	1.3	0.48	0.71	0.8	0.52	0.38	0.41	0.23
Selenium	NA	<1	<0.97	<0.93	<0.93	<1	<1	<1	<0.97	<1.1	<1.1	<1	<1
Uranium	1.13	26	3.2	3.2	2.4	4.8	1.5	3.1 J+	1.3	4.2	2.9	2.5	1
Vanadium	12.6	280	42	44	36	67	21	59 J	14	31	27	24	9.7
Radionuclides (pCi/g)													
Radium-226	1.77	33.2 ± 4	3.77 ± 0.54	3.64 ± 0.55	5.99 ± 0.83	7.57 ± 0.98	3.02 ± 0.49	4.89 ± 0.67	1.73 ± 0.3	3.15 ± 0.51	2.92 ± 0.49	2.26 ± 0.37	2.06 ± 0.34

Notes

Bold	Bolded result indicates positively identified compound
Shaded	Shaded result indicates result greater than or equal to the investigation level
Shaded	Shaded result indicates analyte detected, where that analyte does not have an investigation level
mg/kg	milligrams per kilogram
pCi/g	picocuries per gram
NA	An investigation level is not identified because selenium sample results in BG-3 were all non-detect
1	Analysis required a standard sample dilution of 10 times; reported values have been converted to non-diluted value
<	Result not detected above associated laboratory reporting limit
J	Data are estimated due to associated quality control data
J-	Data are estimated and are potentially biased low due to associated quality control data
J+	Data are estimated and are potentially biased high due to associated quality control data

Table 4-4b
Site Characterization Soil and Sediment Sample Analytical Results for Survey Area B
Barton 3
Removal Site Evaluation Report - Final
Navajo Nation AUM Environmental Response Trust - First Phase

Location Identification		S220-SCX-008	S220-SCX-008 Dup	S220-SCX-009	S220-SCX-009	S220-SCX-010	S220-SCX-010	S220-SCX-011	S220-SCX-011	S220-SCX-012	S220-SCX-012	S220-SCX-012 Dup
Date Collected		6/6/2017	6/6/2017	6/6/2017	6/6/2017	6/7/2017	6/7/2017	6/7/2017	6/7/2017	6/7/2017	6/7/2017	6/7/2017
Depth (feet)		0.5 - 1.5	0.5 - 1.5	0 - 0.5	0.5 - 2	0 - 0.5	0.5 - 3.5	0 - 0.5	0.5 - 12.5	0 - 0.5	0.5 - 2.5	0.5 - 2.5
Sample Category		subsurface	subsurface	surface	composite	surface	composite	surface	composite	surface	composite	composite
Sample Collection Method		grab	grab	grab	grab	grab	grab	grab	grab	grab	grab	grab
Media		sediment	sediment	sediment	sediment	sediment	sediment	soil	soil	soil	soil	soil
Analyte (Units)	Investigation Level											
Metals[1] (mg/kg)												
Arsenic	1.5	1.3	1.3	2.9	3.4	7.5	3.4	1.7	2	4.8	3.6	56
Molybdenum	0.367	<0.2	0.25	2.3	2	3.7	1.8	0.56	0.53	2.7	2.4	7.4
Selenium	NA	<1	<1	<1	<1	<1	<1	<0.99	<1	<0.96	<0.97	2.6
Uranium	1.13	1	1.1	4.4	5.2	5.3	2.7	1.7	1.8	5.2	6.1	5.4
Vanadium	12.6	10	10	59	71	88	36	21	18	56	64	65
Radionuclides (pCi/g)												
Radium-226	1.77	1.5 ± 0.31	1.33 ± 0.3	9.3 ± 1.2	11.9 ± 1.5	9.4 ± 1.2	5.04 ± 0.71	2.53 ± 0.4	2.98 ± 0.47	7.08 ± 0.95	9.6 ± 1.2 J-	8 ± 1 J-

Notes

Bold	Bolded result indicates positively identified compound
Shaded	Shaded result indicates result greater than or equal to the investigation level
Shaded	Shaded result indicates analyte detected, where that analyte does not have an investigation level
mg/kg	milligrams per kilogram
pCi/g	picocuries per gram
NA	An investigation level is not identified because selenium sample results in BG-3 were all non-detect
1	Analysis required a standard sample dilution of 10 times; reported values have been converted to non-diluted value
<	Result not detected above associated laboratory reporting limit
J	Data are estimated due to associated quality control data
J-	Data are estimated and are potentially biased low due to associated quality control data
J+	Data are estimated and are potentially biased high due to associated quality control data

Table 4-4b
Site Characterization Soil and Sediment Sample Analytical Results for Survey Area B
Barton 3
Removal Site Evaluation Report - Final
Navajo Nation AUM Environmental Response Trust - First Phase

Location Identification		S220-SCX-017	S220-SCX-017	S220-SCX-017 Dup	S220-SCX-017	S220-SCX-017	S220-SCX-018	S220-SCX-018	S220-SCX-018	S220-SCX-019	S220-SCX-019	S220-SCX-019
Date Collected		6/7/2017	6/7/2017	6/7/2017	6/7/2017	6/7/2017	6/7/2017	6/7/2017	6/7/2017	6/8/2017	6/8/2017	6/8/2017
Depth (feet)		0 - 0.5	0.5 - 4	0.5 - 4	4 - 9	9 - 12	0 - 0.5	0.5 - 4	4 - 7	0 - 0.5	0.5 - 7.5	11 - 15.5
Sample Category		surface	composite	composite	composite	composite	surface	composite	composite	surface	composite	composite
Sample Collection Method		grab	grab	grab	grab	grab	grab	grab	grab	grab	grab	grab
Media		soil	soil	soil	soil	soil/bedrock	soil	soil	soil	soil	soil	soil
Analyte (Units)	Investigation Level											
Metals[1] (mg/kg)												
Arsenic	1.5	6.4	4.8	8.7	1.1	1.3	1.7	1.5	1.2	3.1	1.4	1.9
Molybdenum	0.367	7.7	5	8.8	0.27	0.63	0.48	0.29	0.6	3.3	0.95	0.77
Selenium	NA	<0.99	<0.99	<0.96	<0.99	<1	<0.97	<1	<1	<0.97	<0.99	<0.99
Uranium	1.13	5.8	4.5	5.6	1.1	1.7	2.9	2.4	1.4	3.1	1.2	1.6
Vanadium	12.6	56	46	47	6.1	8.4	17	17	9.4	33	11	20
Radionuclides (pCi/g)												
Radium-226	1.77	10.1 ± 1.3	10 ± 1.3	8.5 ± 1.1	0.47 ± 0.18	1.67 ± 0.3	2.47 ± 0.39	2 ± 0.33	1.48 ± 0.31	6.73 ± 0.91	2.05 ± 0.33	4.15 ± 0.59

Notes	
Bold	Bolded result indicates positively identified compound
Shaded	Shaded result indicates result greater than or equal to the investigation level
Shaded	Shaded result indicates analyte detected, where that analyte does not have an investigation level
mg/kg	milligrams per kilogram
pCi/g	picocuries per gram
NA	An investigation level is not identified because selenium sample results in BG-3 were all non-detect
1	Analysis required a standard sample dilution of 10 times; reported values have been converted to non-diluted value
<	Result not detected above associated laboratory reporting limit
J	Data are estimated due to associated quality control data
J-	Data are estimated and are potentially biased low due to associated quality control data
J+	Data are estimated and are potentially biased high due to associated quality control data

Table 4-4b
Site Characterization Soil and Sediment Sample Analytical Results for Survey Area B
Barton 3
Removal Site Evaluation Report - Final
Navajo Nation AUM Environmental Response Trust - First Phase

Location Identification		S220-SCX-019	S220-SCX-020	S220-SCX-020 Dup	S220-SCX-020	S220-SCX-021	S220-SCX-021	S220-SCX-022	S220-SCX-022	S220-SCX-022	S220-SCX-023	S220-SCX-023
Date Collected		6/8/2017	6/8/2017	6/8/2017	6/8/2017	6/8/2017	6/8/2017	6/8/2017	6/8/2017	6/8/2017	6/6/2017	6/6/2017
Depth (feet)		7.5 - 11	0 - 0.5	0 - 0.5	0.5 - 2.5	0 - 0.5	0.5 - 2	0 - 0.5	19 - 20	5 - 10	0 - 0.5	0.5 - 2
Sample Category		composite	surface	surface	composite	surface	composite	surface	composite	composite	surface	composite
Sample Collection Method		grab	grab	grab	grab	grab	grab	grab	grab	grab	grab	grab
Media		soil	soil	soil	soil	soil	soil/bedrock	soil	soil	soil	soil	soil
Analyte (Units)												
Metals[1] (mg/kg)	Investigation Level											
Arsenic	1.5	1	2.1	2.7	2.5	3	4.3	1.4	1.4	2.2	1.3	1.6
Molybdenum	0.367	0.26	2.2	2.8	2.9	3.8	5.3	0.33	<0.2	1.5	0.22	<0.19
Selenium	NA	<1	<0.95	<1	<1	<0.97	<1	<0.99	<1	<0.94	<0.97	<0.96
Uranium	1.13	0.98	4.3	4.2	5	5.3	4.3	1	0.69	2.7	1.3	0.99
Vanadium	12.6	11	37	39	45	56	54	7.7	8.3	22	12	11
Radionuclides (pCi/g)												
Radium-226	1.77	0.99 ± 0.23	4.58 ± 0.66	4.18 ± 0.58	5.24 ± 0.73	4.32 ± 0.6	5.88 ± 0.79	1.21 ± 0.29	0.72 ± 0.21	2.37 ± 0.41	1.59 ± 0.29	1.66 ± 0.35

Notes

Bold	Bolded result indicates positively identified compound
Shaded	Shaded result indicates result greater than or equal to the investigation level
Shaded	Shaded result indicates analyte detected, where that analyte does not have an investigation level
mg/kg	milligrams per kilogram
pCi/g	picocuries per gram
NA	An investigation level is not identified because selenium sample results in BG-3 were all non-detect
[1]	Analysis required a standard sample dilution of 10 times; reported values have been converted to non-diluted value
<	Result not detected above associated laboratory reporting limit
J	Data are estimated due to associated quality control data
J-	Data are estimated and are potentially biased low due to associated quality control data
J+	Data are estimated and are potentially biased high due to associated quality control data

Table 4-5
Summary of Investigation Level Exceedances in Soil/Sediment at Borehole Locations
Barton 3
Removal Site Evaluation Report - Final
Navajo Nation AUM Environmental Response Trust - First Phase

Sample Location	Survey Area	Investigation Level Exceedances
S220-SCX-003	B	As, Mo, U, V, Ra-226, Static Gamma
S220-SCX-004	A	As, Mo, V, Static Gamma
S220-SCX-005	A	Mo, V, Static Gamma
S220-SCX-006	A	As, Mo, U, V, Ra-226, Static Gamma
S220-SCX-008	B	Ra-226, Static Gamma
S220-SCX-009	B	As, Mo, U, V, Ra-226, Static Gamma
S220-SCX-010	B	As, Mo, U, V, Ra-226, Static Gamma
S220-SCX-011	B	As, Mo, U, V, Ra-226, Static Gamma
S220-SCX-012	B	As, Mo, U, V, Ra-226, Static Gamma
S220-SCX-013	A	As, Mo, U, V, Ra-226, Static Gamma
S220-SCX-014	A	As, Mo, V, Static Gamma
S220-SCX-015[1]	A	As, Mo, Se, U, V, Ra-226, Static Gamma
S220-SCX-016[1]	A	As, Mo, Se, U, V, Ra-226, Static Gamma
S220-SCX-017[2]	B	As, Mo, U, V, Ra-226, Static Gamma
S220-SCX-018	B	As, Mo, U, V, Ra-226, Static Gamma
S220-SCX-019	B	As, Mo, U, V, Ra-226, Static Gamma
S220-SCX-020[2]	B	As, Mo, U, V, Ra-226, Static Gamma
S220-SCX-021	B	As, Mo, U, V, Ra-226, Static Gamma
S220-SCX-022	B	As, Mo, U, V, Ra-226, Static Gamma
S220-SCX-023	B	As, U, Static Gamma

Notes
[1] Detections of Se included for reference, no IL is established for Se
[2] Includes a sample that crosses the soil to bedrock contact
As - Arsenic
Mo - Molybdenum
Ra-226 - Radium 226
Se - Selenium
U - Uranium
V - Vanadium

FIGURES

FIGURE ACRONYMS/ABBREVIATIONS

As	arsenic
BG	potential background reference area
bgs	below ground surface
cpm	counts per minute
ft	feet
IL	investigation level
mg/kg	milligrams per kilogram
Mo	molybdenum
NA	not applicable
NAD	North American Datum
pCi/g	picocuries per gram
Ra	radium-226
Ra-226	radium-226
Se	selenium
TENORM	Technologically Enhanced Naturally Occurring Radioactive Materials
uk	unknown
U	uranium
UTL	upper tolerance limit
UTM	Universal Transverse Mercator
V	vanadium

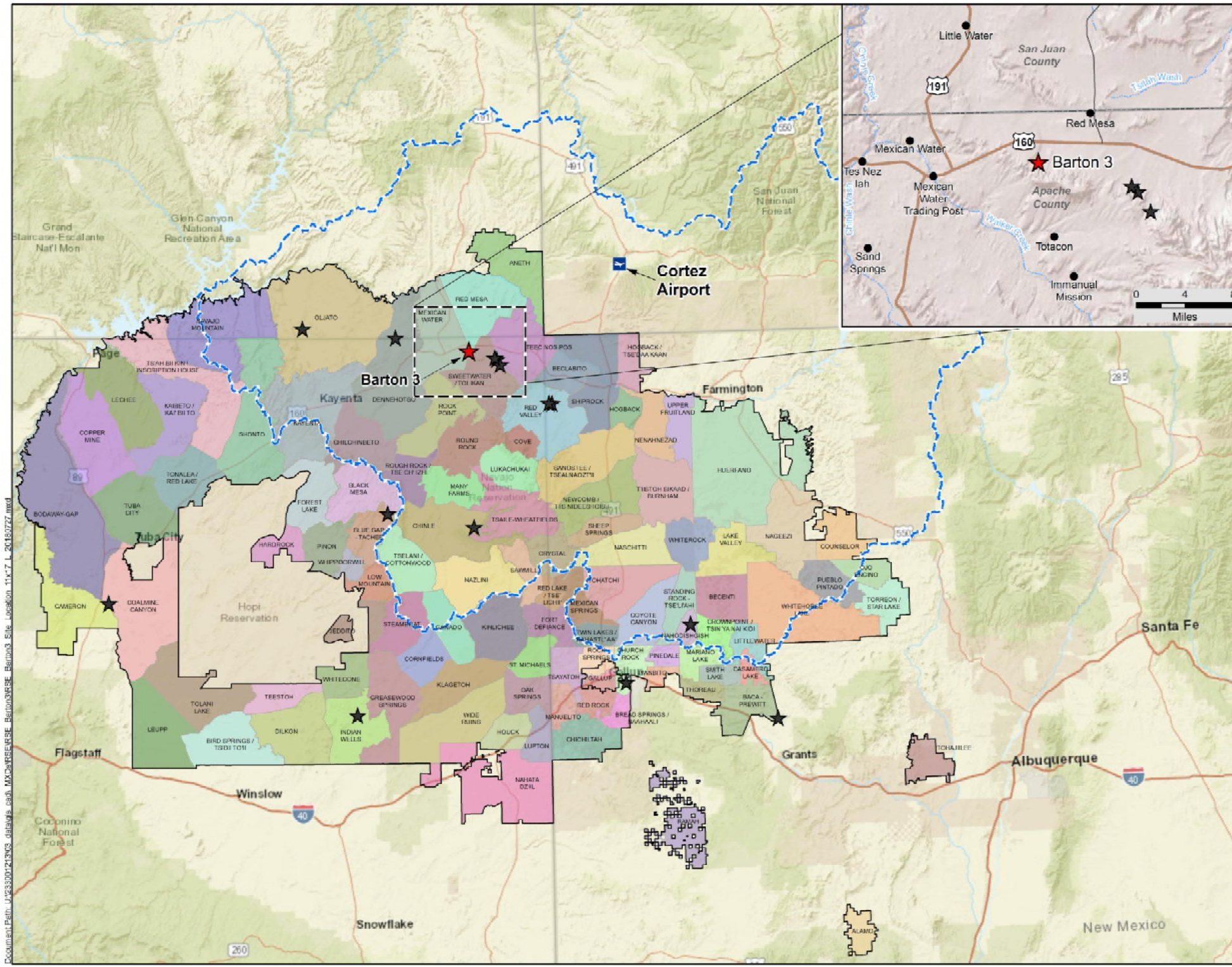

NAVAJO NATION
AUM Environmental Response Trust-First Phase

LEGEND

- Barton 3 Mine Site
- Priority Abandoned Uranium Mine (AUM) Site
- Populated Place
- US Highway
- Major Road
- Intermittent Stream
- San Juan River Watershed
- Navajo Nation Boundary
- Navajo Nation Chapter

Cortez Airport, Colorado Wind Rose (KCEZ), 1996-2006

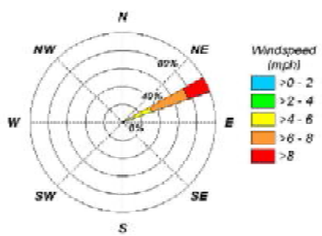

REFERENCES:
Coordinate System: NAD 1983 UTM Zone 12N

Basemap: ESRI World Street Map and World Shaded Relief accessed 07/2018.

Wind Rose: USEPA, 2007a

N W E S
0 25 50
Miles

TITLE: Site Location

PROJECT: Removal Site Evaluation Barton 3 Mine Site

DATE: 7/30/2018

DOCUMENT NAME: Removal Site Evaluation Report

AUTHOR: CBB

REVIEWER: EDZ

Stantec

FIGURE: 1-1

Document Path: U:\233001213\GIS_data\gis_path_MXDs\RSE\RSE_Barton3\RSE_Barton3_Site_Location_11x17_L_20180727.mxd

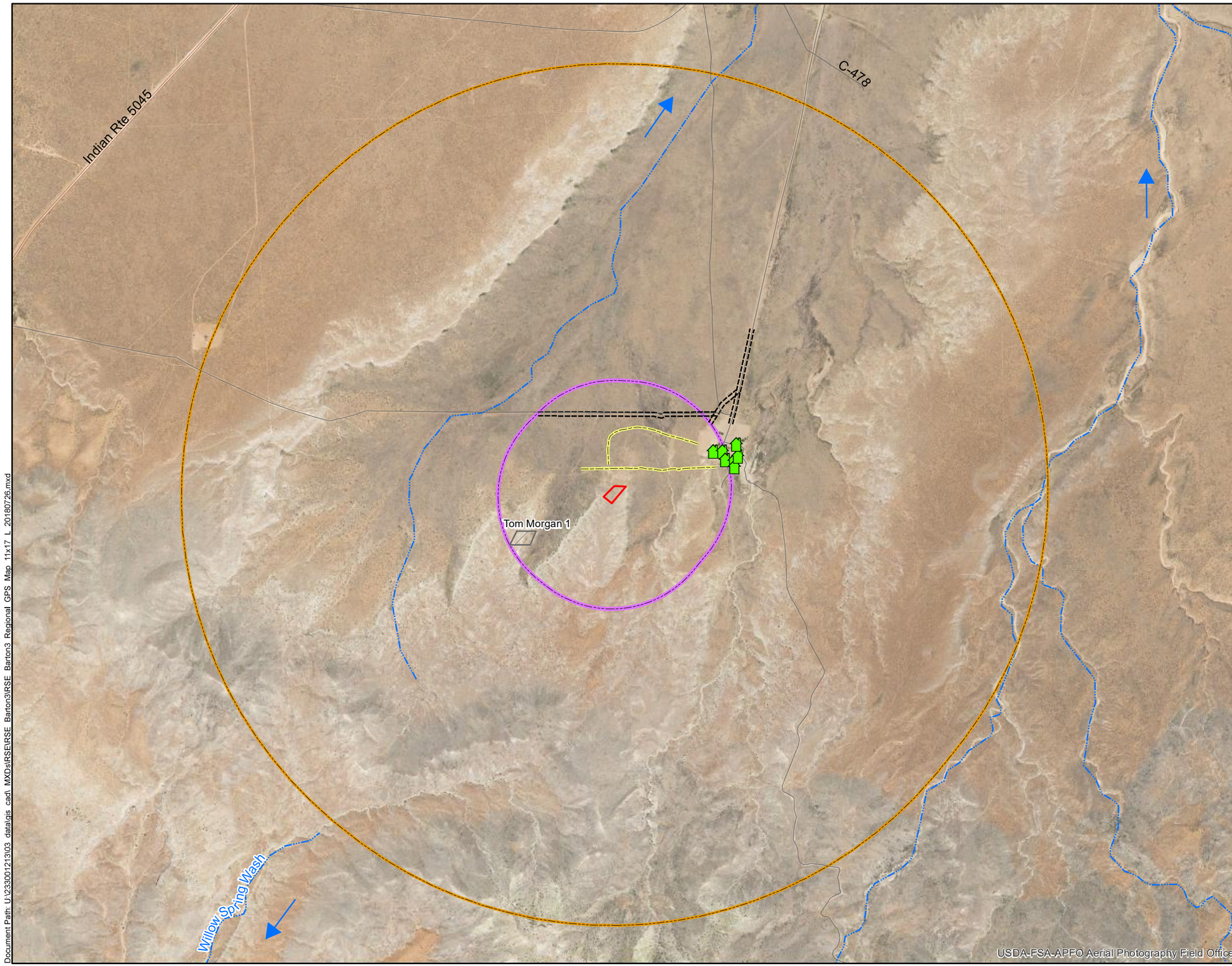

NAVAJO NATION
AUM Environmental Response Trust-First Phase

LEGEND

- Habitable Building
- Flow Direction
- Tribal Road
- Local Road
- Potential Haul Road
- Road
- Intermittent Stream/River
- Claim Boundary
- 1/4-Mile Claim Boundary Buffer
- 1-Mile Claim Boundary Buffer
- Other Claim Boundary

REFERENCES:
Coordinate System: NAD 1983 UTM Zone 12N

Basemap image accessed from the National Agriculture Imagery Program (NAIP) web mapping service (https://gis.apfo.usda.gov/arcgis/services/) on 07/2018.

N
W E
S

0 1,200 2,400
Feet

TITLE:
Site Features

PROJECT:
Removal Site Evaluation
Barton 3 Mine Site

DATE: 7/26/2018

DOCUMENT NAME: Removal Site Evaluation Report

Stantec

AUTHOR: CBB

REVIEWER: EDZ

FIGURE: 2-1

Document Path: U:\233001213\03_data\gis_cad_MXDs\RSE\RSE_Barton3\RSE_Barton3_Regional_GPS_Map_11x17_L_20180726.mxd

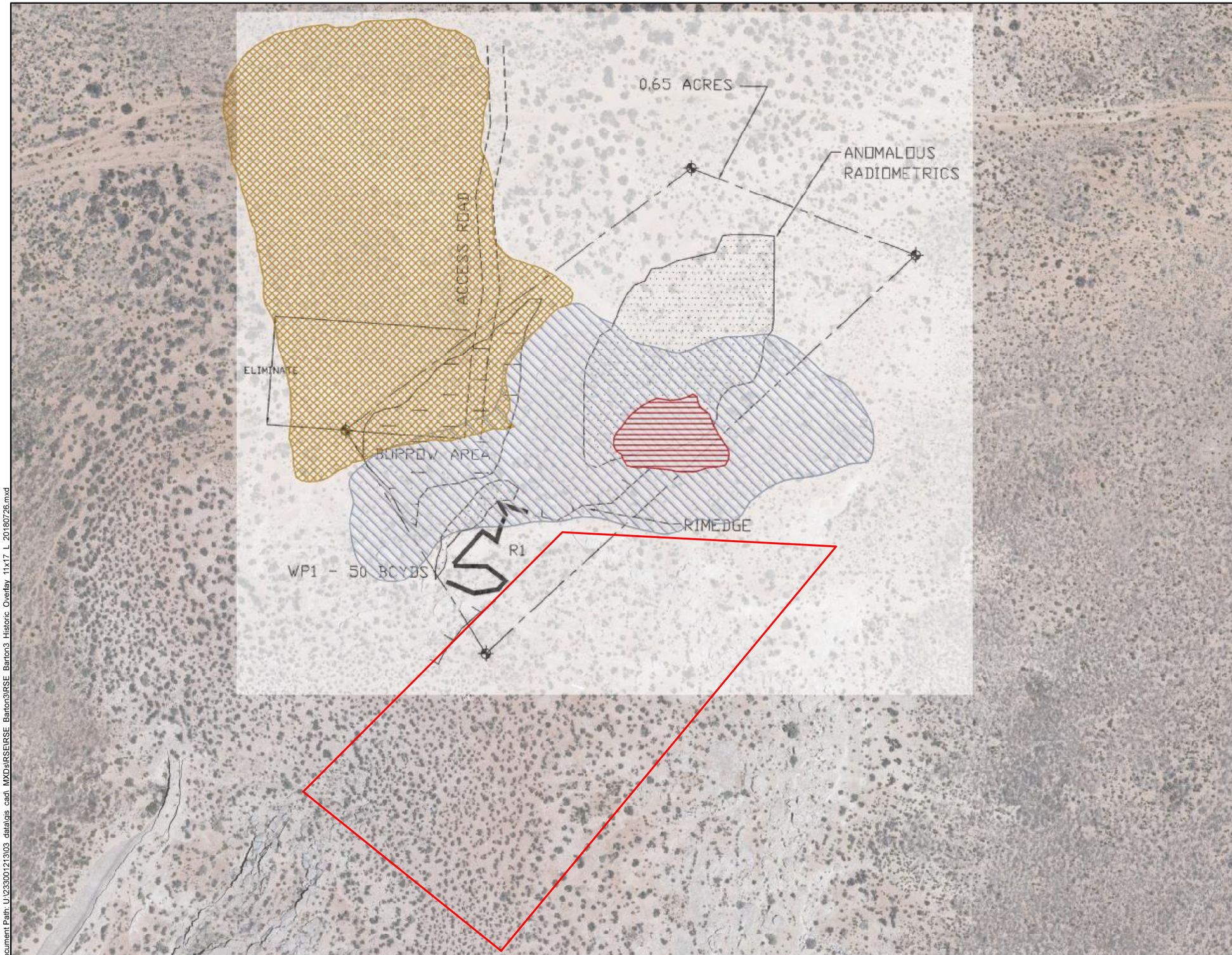

NAVAJO NATION
AUM Environmental Response Trust-First Phase

LEGEND

- Excavation
- Graded / Disturbed Reclaimed Area
- Waste Pile
- Claim Boundary

NOTES:
Overlay of historical site drawing is approximate due to lack of tie points needed for georeferencing.

R1 - Rim Strip

WP1 = Waste Pile

BCYDS = Bank Cubic Yards

REFERENCES:
Coordinate System: NAD 1983 UTM Zone 12N

Historical Site Drawing:
Navajo Abandoned Mine Land Reclamation Program (NAML), 1998. Corrizo 1 AML NA-0508B, Barton 3, Sweetwater, Arizona, Map #12.

Basemap image flown by Cooper Aerial Surveys Co. on June 16, 2017.

N
W E
S

0 50 100
Feet

TITLE:
Historical Mine Drawing Overlay

PROJECT:
Removal Site Evaluation
Barton 3 Mine Site

DATE: 7/30/2018

DOCUMENT NAME: Removal Site Evaluation Report

Stantec

AUTHOR: CBB

REVIEWER: EDZ

FIGURE: 2-2

Document Path: U:\233001213\03_data\gis_cad_MXDs\RSE\RSE_Barton3\RSE_Barton3_Historic_Overlay_11x17_L_20180726.mxd

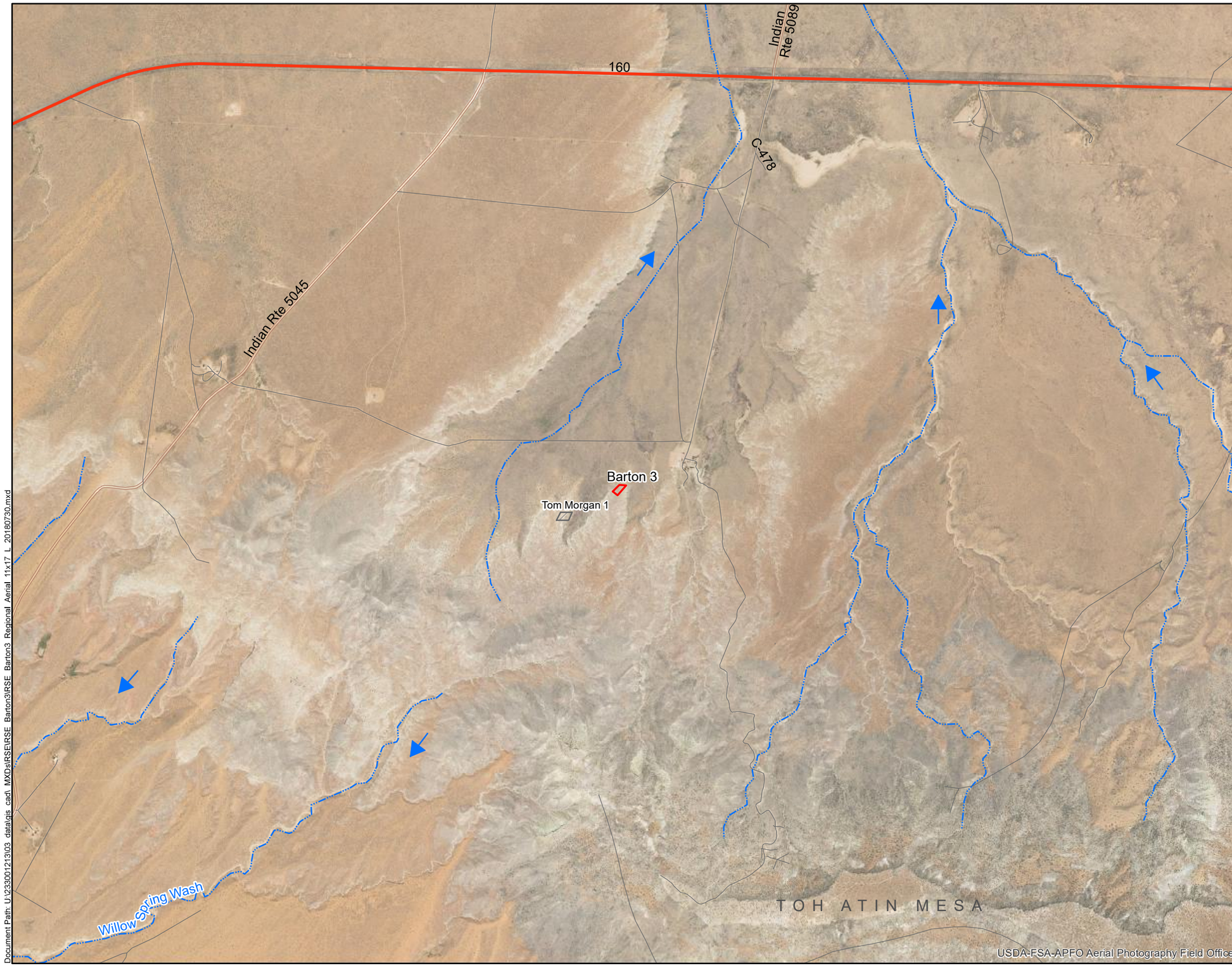

NAVAJO NATION
AUM Environmental Response Trust-First Phase

LEGEND

- Flow Direction
- Intermittent Stream/River
- U.S. Highway
- Tribal Road
- Local Road
- Claim Boundary
- Other Claim Boundary

REFERENCES:
Coordinate System: NAD 1983 UTM Zone 12N

Basemap image accessed from the National Agriculture Imagery Program (NAIP) web mapping service (https://gis.apfo.usda.gov/arcgis/services/) on 7/30/2018

N
W E
S

0 2,000 4,000
Feet

TITLE:
Regional Aerial Photograph

PROJECT:
Removal Site Evaluation
Barton 3 Mine Site

DATE: 7/30/2018

DOCUMENT NAME: Removal Site Evaluation Report

AUTHOR: CBB

REVIEWER: EDZ

Stantec

FIGURE: 2-3

Document Path: U:\233001213\03_data\gis_cad_MXDs\RSE\RSE_Barton3\RSE_Barton3_Regional_Aerial_11x17_L_20180730.mxd

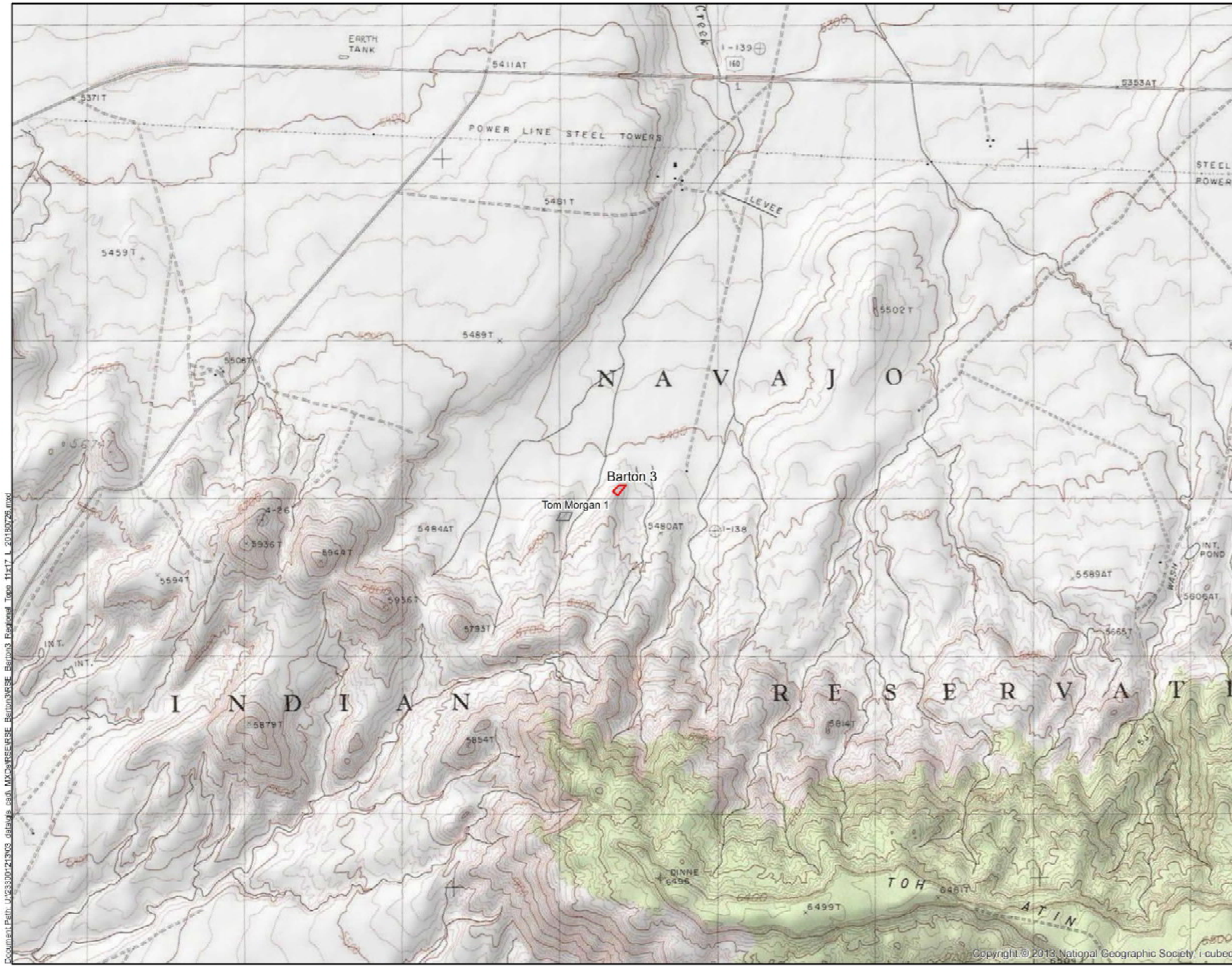

NAVAJO NATION
AUM Environmental Response Trust-First Phase

LEGEND

- Claim Boundary
- Other Claim Boundary

REFERENCES:
Coordinate System: NAD 1983 UTM Zone 12N

Basemap: ESRI USA Topo Maps service accessed 07/2018.

N W E S

0 2,000 4,000
Feet

TITLE:
Regional Topographic Map

PROJECT:
Removal Site Evaluation
Barton 3 Mine Site

DATE: 7/30/2018

DOCUMENT NAME: Removal Site Evaluation Report

Stantec

AUTHOR: CBB
REVIEWER: EDZ

FIGURE: 2-4

Document Path: U:\233001213\03_data\gis_cad_MXD\sRSE\RSE_Barton3\RSE_Barton3_Regional_Topo_11x17_L_20180726.mxd

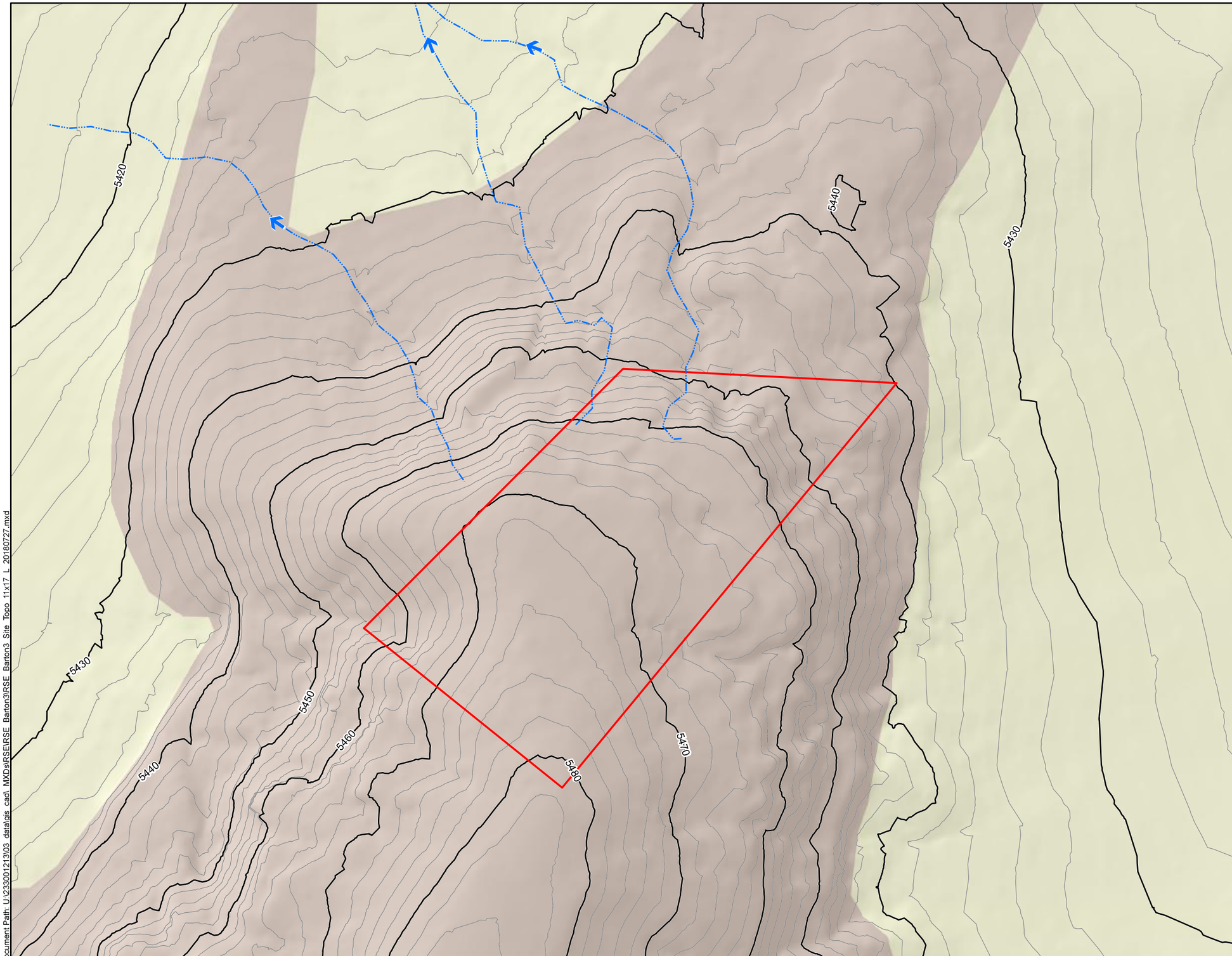

NAVAJO NATION
AUM Environmental Response Trust-First Phase

LEGEND

- Flow Direction
- Drainage
- Index Contour (10 ft Interval)
- Index Contour (2 ft Interval)
- Claim Boundary

Geomorphology Features

- Ridge
- Plains

REFERENCES:

Site-specific contours were generated as part of aerial surveys conducted on June 16, 2017.

Coordinate System: NAD 1983 UTM Zone 12N

N W E S

0 50 100
Feet

TITLE:

Site Topography

PROJECT:

Removal Site Evaluation
Barton 3 Mine Site

DATE: 7/30/2018

DOCUMENT NAME: Removal Site Evaluation Report

Stantec

AUTHOR: CBB

REVIEWER: EY

FIGURE: 2-5

Document Path: U:\233001213\03_data\gis_cad_MXDs\RSE\RSE_Barton3\RSE_Barton3_Site_Topo_11x17_L_20180727.mxd

DEPARTMENT OF THE INTERIOR
UNITED STATES GEOLOGICAL SURVEY

PREPARED IN COOPERATION WITH THE
U.S. ATOMIC ENERGY COMMISSION

MISCELLANEOUS GEOLOGIC INVESTIGATIONS
MAP I-345 (SHEET 1-GEOLOGY)

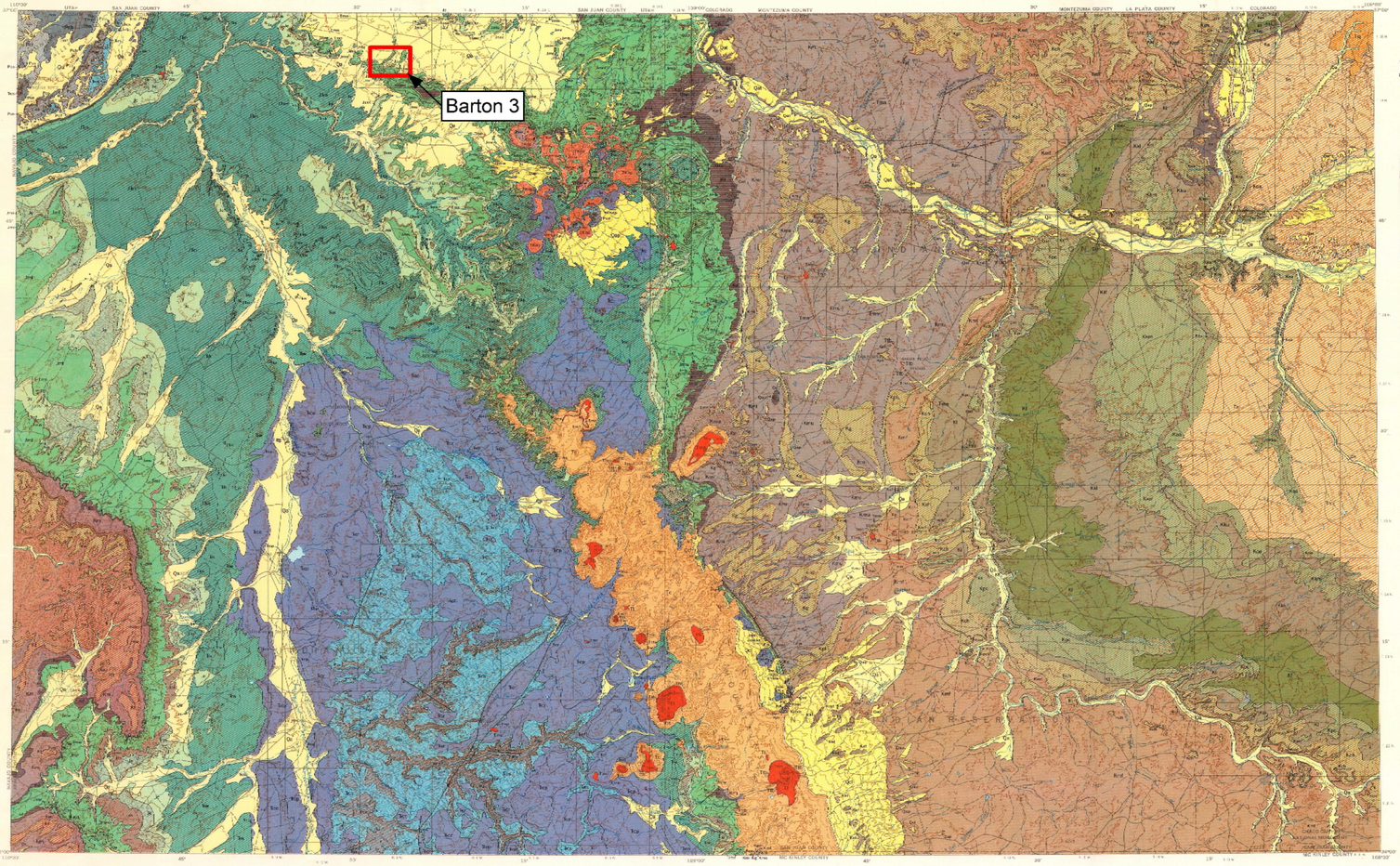

EXPLANATION

QUATERNARY

Qa — **Alluvium**
Unconsolidated surficial deposits of valley fill, mainly stream-deposited silt, sand, and gravel, but including also colluvium, talus, and landslide material, and in parts, low-level terrace gravels. In the Monument Valley area also includes unconsolidated gravel in a matrix of fine- to medium-grained sand.

Qcd — **Landslide debris**
Unconsolidated surficial masses of broken rock mainly of the Chinle Formation. In Chinle Mountains shown on geologic map is only of Chinle sandstone, on Carrizo Mountains also includes landslides in the Hoya Verde area in conjunction mainly of Cliff House sandstone.

Qgt — **Terrace gravel**
Surficial masses of unconsolidated gravel and sand on terraces formed along the San Juan River.

Qpd — **Pediment gravel**
Surficial masses of unconsolidated gravel and boulders dotting the pediment surfaces around the Carrizo Mountains, near Mexican Water, and of the Chuska Mountains, and around Barker Dome.

TERTIARY

Tt — **Trachybasalt**
Intrusive and extrusive basaltic rock composed of diopside, basaltic plagioclase, nepheline, and accessory minerals, in dike, sill, and plug.

Ts — **Syenite-bearing intrusia**
Intrusive large and small fragments of sedimentary and igneous rocks with syenite, syenite porphyry, mineralization, sulfide veins and accessory diopside, mica, and garnets of uncertain origin.

Tm — **Monzonite**
Intrusive monzonite and monzonite porphyry, syenite, and accessory minerals.

Tb — **Monchiquite**
Intrusive basaltic rock composed of augite, nepheline, and accessory minerals.

Tp — **Tuff-breccia**
Pumiceous tuff and tuff-breccia, breccia, and subordinate basaltic rock. Locally includes small dikes and irregular masses of intrusive igneous rocks and local fragments of sedimentary rock.

Tc — **Chuska sandstone**
Light-brown, yellowish-gray to white coarse-bedded sandstone with subordinate reddish-brown siltstone and shale.

Tsj — **San Jose Formation of Simpson (1948)**
Buff sandstone and conglomeratic sandstone and subordinate gray and red shale.

Tn — **Nacimiento formation**
Gray and brown shale and sandstone, medium-grained and conglomeratic sandstone.

Tbr — **Brecciated rocks**
Brecciated sandstone resulting mainly of gravity sliding. Includes Jurassic dikes, pockmarked with spring spots and non-stratigraphic.

Tdp — **Diorite porphyry**
Diorite porphyry in sills, laccoliths, and dikes of the Carrizo Mountains; composed of plagioclase, biotite, and hornblende, hornblende, and biotite, quartz in a groundmass of feldspar and quartz, massive; therefore accessory minerals. Also includes some fresh intrusions composed of phenocrysts of hornblende, quartz, and biotite in a groundmass of plagioclase and of quartz, feldspar, and glass.

Tkoa — **Ojo Alamo sandstone**
Thick-bedded coarse-grained and conglomeratic sandstone.

Tki — **Kirtland shale**
Gray, upper shale member; gray-and-red, lower shale member; gray-and-red, middle sandstone member, fine, fine- to medium-grained.

Tf — **Fruitland formation***
Gray, brown, and black shale, siltstone, coal, and fine crossbedded sandstone, and coal.

Kpc — **Pictured Cliffs sandstone***
Fine crossbedded medium- to massive-bedded fine- to medium-grained sandstone. In a small area approximately eight miles east of Monument Valley the Lewis shale is absent, the Pictured Cliffs sandstone cannot be separated from the underlying Cliff House sandstone and is mapped with the Cliff House sandstone.

Kl — **Lewis shale***
Light to dark-gray shale, concretionary beds of ironstone, and, especially in the upper and lower transitional zone, dark gray beds of sandstone.

Kch — **Cliff House sandstone***
Fine and gray crossbedded fine- to medium-grained sandstone with varying amounts of interbedded gray shale. Locally Cliff House sandstone includes tongues of the Menefee formation.

Kmf — **Menefee formation***
Alternating beds of fine and brown sandstone, gray and brown siltstone and shale; coal, and weathered layers of ironstone and ironstone concretions.

Kp — **Point Lookout sandstone***
Fine and brown sandstone with lesser amounts of gray shale. In the Toadlena-Crystal area the Mancos tongue, Kpb, is separated from the main body of the Point Lookout by the Satan tongue of the Mancos shale.

Kc — **Crevasse Canyon Formation:***
Alternating beds of fine conglomeratic lithic and feldspathic sandstone, dark shale, claystone, and coal; consists of three members, the Gibson coal, Dilton sandstone and Dilco coal member, separately. As mapped in the small area 2 miles northeast of Crystal it consists of Gibson coal member and Dilton sandstone member that includes the Mancos tongue of the Mancos shale. The Dilco coal member equivalent of the Crevasse Canyon formation and strong sandstone of Sears, Hunt, and Hendricks (1941) are mapped with the Gallup sandstone.

Kg — **Gallup sandstone and Dilco coal member equivalent and stray sandstone of Sears, Hunt, and Hendricks (1941)***
Fine, brown, and pinkish-gray, thin- to massive-bedded, very fine- to very coarse-grained sandstone, with lesser amounts of brown carbonaceous shale, gray shale, and some thin coal seams. South of the San Juan River the lithologic equivalent of Dilco (Gallup) grads into Mancos shale. Between this problem and the San Juan River only the stray sandstones, Kg, are shown. North of the San Juan River the along sandstone is mapped with the Mancos shale.

Km — **Mancos shale and Dakota sandstone, undifferentiated**
On Black Mesa and in the Carrizo Mountains the Dakota sandstone is mapped locally with the Mancos shale.

Km — **Mancos shale***
Predominantly light- to dark-gray marine shale with subordinate lenses of coarse-grained sandstone and siltstone and limited or concretionary limestone. North of the San Juan River includes the stray sandstone of Sears, Hunt, and Hendricks (1941). South of the San Juan River the Mancos shale, Km, is divided by the Gallup sandstone into upper, Kmu, and lower, Kml, parts. In the Carrizo Mountains the upper part of the Mancos shale includes the tongue of the Mancos shale to form the Satan tongue, Kmt, and the Middle tongue, Kmm. In a small area a wedge overlapped of Crystal the Middle tongue is merged with the Crevasse Canyon formation. On Black Mesa the Mancos shale, Km, is not divided.

Kd — **Dakota sandstone**
Fine, brown, and gray sandstone, conglomeratic sandstone, dark-gray shale, and lenses of coal.

UNCONFORMITY

JURASSIC

Jm — **Morrison formation**
Jmu, Brushy Basin member, green, purple, and gray shale and siltstone, gray and tan sandstone and conglomerate; sandstone may locally include the Burro Canyon formation. The Brushy Basin member may be present at Tse's Point but not elsewhere on Black Mesa.
Jmc, Westwater Canyon member, yellow-weathering sandstone with conglomeratic lenses, and green-to-gray shale.
Jmt, Recapture member, shale and minor fine- to medium-grained sandstone, locally includes the Bluff sandstone bed.
Jmw, Salt Wash member, shale and sandstone, gray, fine- to medium-grained sandstone, and gray-to-red shale.
In areas where the members of the Morrison formation are not shown separately, Jm, in other areas it is divided into upper, Jmu, and lower, Jml, parts. Locally in the Carrizo Mountains and along the east side of the Chuska Mountains south of the Gap of Separation of the Salt River member, the Brushy Basin, Westwater Canyon, and Recapture members are mapped together, Jmuc.

Jcs — **Cow Springs sandstone**
Generally gray to light-yellowish-gray, fine- to medium-grained cross-bedded sandstone, which tongues and grades into members of the Morrison formation and grades into the Summerville formation of the San Rafael group.

Js — **Summerville formation**
Moderate reddish-brown, fine- to medium-grained sandstone and argillaceous siltstone. In the Carrizo Mountains area the Bluff sandstone, a medium-grained and friable, very pale orange to pink sandstone, is included in the Summerville formation. In the Tse'Chinili Mesa area the Summerville formation grades laterally into the Cow Springs sandstone.

Jsr — **Summerville and Entrada formations undifferentiated**

Jte — **Todilto and Entrada formations undifferentiated**
In the Black Mesa-Beautiful Mountain area and in the northwestern part of Hubbell area.

Jt — **Todilto limestone**
Gray fine-bedded limestone and reddish-brown sandy shale and siltstone.

Je — **Entrada sandstone**
Reddish-brown, fine-grained sandstone and siltstone.

Jsc — **Summerville, Todilto, and Entrada formations undifferentiated**

Jc — **Carmel formation**
Dark-purple and red siltstone, siltstone, and interbedded reddish-orange sandstone.

JTRn — **Navajo sandstone**
Light-brown and pale-orange, fine- to medium-grained crossbedded sandstone.

JTRk — **Navajo sandstone and Kayenta formation**
Navajo and Kayenta are by this to be mapped separately.

JTRk — **Kayenta formation**
Lenticular poorly to well-bedded sandstone, siltstone, grit, conglomerate, and minor limestone.

JTRw — **Wingate sandstone**
South of Laguna Creek includes the upper Lukachukai member, pale reddish-brown, fine- to medium-grained crossbedded sandstone, and a lower, Rock Point member, pale reddish-brown silty sandstone and siltstone. North of Laguna Creek the Lukachukai member constitutes the entire Wingate sandstone and the Rock Point member is included in the Chinle Red member of the Chinle formation.

TRc — **Chinle formation**
In most of the area from Tse Chinili to Alcalde Lake Ridge, Owl Rock member, interbedded limestone and reddish-brown siltstone, Petrified Forest member, blue to white bentonitic claystone and minor amounts of siltstone and sandstone.
Ysr, the red member, dark reddish-brown bentonitic siltstone, mudstone, and local pale conglomerate.
Yw, the white member, pale-orange and yellowish-gray sandstone, siltstone, conglomerate, and scaly shale.
In the Monument Valley area the Chinle formation is divided into an upper and lower, Ru, which consists in descending order of the Church Rock member, Owl Rock member, Petrified Forest member, and Shinarump Rock member and the Shinarump member, Rs, or the Shinarump member.
We, members of the Chinle formation not shown separately in the southeastern part of the Carrizo Mountains area and along the east side of the Chuska Mountains.

UNCONFORMITY

TRm — **Moenkopi formation**
Upper part, chocolate- to brick-red siltstone and fine-grained ripple-marked sandstone, including the Shinarump member, reddish-brown, cross-bedded sandstone, and minor interbedded sandstone; the Moenkopi includes red and gray, approximately equal amounts of siltstone and sandstone. In the Lukachukai Mountains, the Moenkopi formation is mapped mainly with the underlying Le Chelly sandstone member of the Cutler formation, Pcl.

Pcl — **Cutler formation**
In Monument Valley the Cutler is divided into:
Pcl, De Chelly sandstone member, buff massive crossbedded sandstone.
Pcu, Organ Rock tongue, reddish-brown cross-bedded sandstone, siltstone, and interbedded salt beds, and local gray siltstone.
Pcc, Cedar Mesa sandstone member, orange-brown crossbedded sandstone with thin lenticular interbeds of light-gray limy siltstone.
Pcf, Halgaito tongue, reddish-brown shaly siltstone and silty sandstone with thin lenticular beds of light-gray limestone.

Pc — **Cutler formation**
In the Carrizo Mountains area:
Pcd, De Chelly sandstone member, reddish- to grayish-orange and crossbedded.
Pcl, lower member, conglomeratic red arkosic sandstone and red, green, and gray siltstone.

Pdc — **De Chelly sandstone**
Reddish-orange and pale-orange cross-bedded sandstone; in De Chelly country.

PERMIAN

PIPs — **Supai formation**
Reddish-brown and reddish-orange fine- to medium-grained sandstone and siltstone with at least 1500 feet of limestone.

PENNSYLVANIAN AND PERMIAN

Contact
Dashed where approximately located

Fault, showing downthrown side
Dashed where approximately located

Jtc / Jc

Limit of deposition of a formation or member, in this case the limit of the Todilto limestone. In the Lukachukai Mountains, the erosional truncation of the Recapture member of the Morrison formation is shown by this symbol

U

Uranium-bearing formation or member

*See schematic diagram

REFERENCES CITED IN EXPLANATION

Baars, D. L., Hunt, C. B., and Hendricks, T. A., 1941, Tectonic and regional relations of the Southern San Juan Basin, New Mexico: Geol. Soc. Am. Bull., v. 52, no. 12, pt. 2, p. 1943.

Stokes, W. L., 1948, The Shape of the San Juan Basin, New Mexico: Am. Jour. Sci., v. 246, no. 5, p. 257-262.

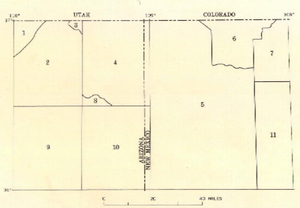

INDEX MAP SHOWING SOURCES OF GEOLOGIC DATA

GEOLOGIC SOURCES

Numbers correspond to those given on key map (* indicates unpublished maps)

1. Wilchins, L. J., and others, U. S. Geol. Survey Mineral Inv. Field Studies Maps MF-32, 50, 52.
2. O'Sullivan, R. B., U. S. Geol. Survey detailed mapping (*).
3. Strobell, J. D., Jr., U. S. Geol. Survey detailed photogeology mapping (*).
4. Strobell, J. D., Jr., U. S. Geol. Survey Oil and Gas Inv. Map OM-160 (supplemented by unpublished data in the central and southern part of the area).
5. O'Sullivan, R. B., and Beaumont, E. C., U. S. Geol. Survey Oil and Gas Inv. Map OM-196.
6. Hayes, P. T., and Zapp, A. D., U. S. Geol. Survey Oil and Gas Inv. Map OM-144.
7. Baltz, E. H., Beikman, H. M., and O'Sullivan, R. B., U. S. Geol. Survey photogeology and detailed geologic mapping (*).
8. Repenning, C. A., U. S. Geol. Survey detailed mapping (*).
9. Repenning, C. A., U. S. Geol. Survey open-file maps (modified in part by reconnaissance mapping by R. B. O'Sullivan).
10. Cooley, M. E., Irwin, J. H., Repenning, C. A., and Stewart, F. R., U. S. Geol. Survey open-file map (modified in part by reconnaissance mapping by R.B. O'Sullivan).
11. O'Sullivan, R. B., U. S. Geol. Survey reconnaissance mapping (*).

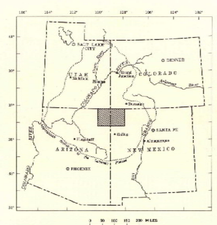

INDEX MAP SHOWING AREA OF SHIPROCK QUADRANGLE

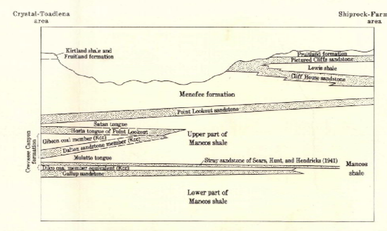

SCHEMATIC DIAGRAM SHOWING STRATIGRAPHIC RELATIONS OF MESAVERDE GROUP, EQUIVALENT FORMATIONS, AND THE MANCOS SHALE

GEOLOGY, STRUCTURE, AND URANIUM DEPOSITS OF THE SHIPROCK QUADRANGLE, NEW MEXICO AND ARIZONA

Compiled by
Robert B. O'Sullivan and Helen M. Beikman

1963

(OOS)M
MISCELLANEOUS GEOLOGIC INVESTIGATIONS
MAP I-345 (SHEET 1-GEOLOGY)

U.S. GEOLOGICAL SURVEY
SEP 26 1963
LIBRARY

NAVAJO NATION
AUM Environmental Response Trust-First Phase

Stantec

TITLE: Regional Geology	
PROJECT: Removal Site Evaluation Barton 3 Mine Site	
DATE: 7/30/2018	DOCUMENT NAME: Removal Site Evaluation Report
	AUTHOR: CBB / REVIEWER: EDZ
	FIGURE: 2-6

Document Path: U:\233\0\121\3\03_data\gis_cad_MXD\ArSER\SE_Barton3\RSE_Barton_3_Geology_22x34_L_20180725.mxd

NOTE:

Based on field observations at the Site, bedrock units shown are near surface (typically within 1 foot), but do not necessarily outcrop and may be overlain by minor Q deposits.

REFERENCES:

Coordinate System: NAD 1983 UTM Zone 12N

Basemap image accessed from the National Agriculture Imagery Program (NAIP) web mapping service (https://gis.apfo.usda.gov/arcgis/services/) on 09/2018.

Geology adapted from O'Sullivan, R.B., and Beikman, H.M (1963): O'Sullivan, R.B., and Beikman, H.M, 1963, Geology, structure and uranium deposits of the Shiprock quadrangle, New Mexico and Arizona: U.S. Geological Survey I-345, scale 1:250,000.

N
W E
S

0 200 400
Feet

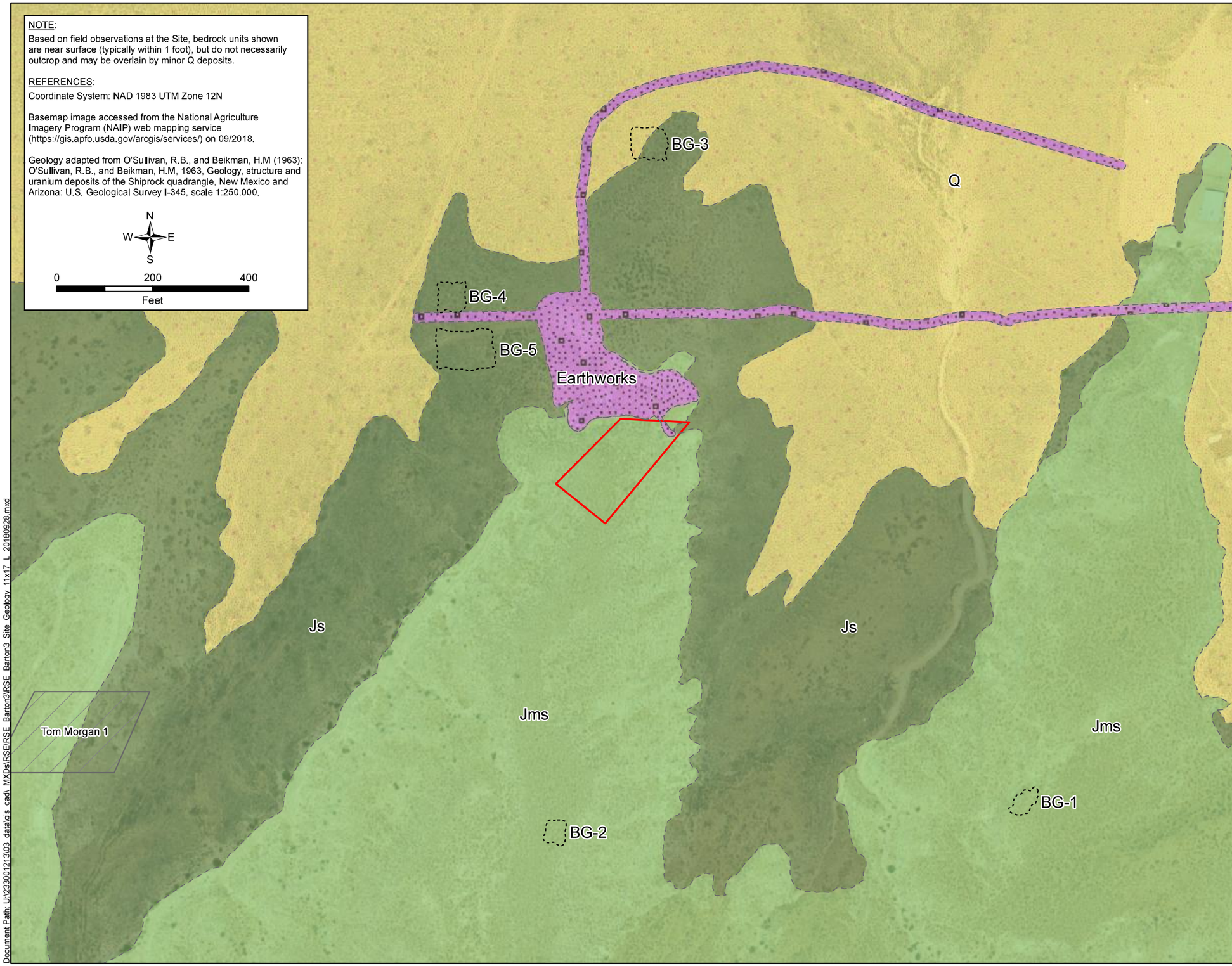

NAVAJO NATION
AUM Environmental Response Trust-First Phase

LEGEND

- Potential Background Reference Area
- Claim Boundary
- Other Claim Boundary
- Geologic Contact (Inferred)

Site Geology

HOLOCENE

- Earthworks: Human-caused disturbance of the land surface related to mining.
- Q: Quaternary Deposits – Undifferentiated (Pleistocene and Holocene) – includes sandy to gravelly colluvial and alluvial deposits, and eolian sand deposits.

JURASSIC

- Jms: Salt Wash Member of the Morrison Formation (Upper Jurassic) – Yellowish gray to greenish-gray cross-bedded very fine to medium-grained calcareous sandstone inter-bedded with greenish-gray and reddish-brown claystone.
- Js: Summerville Formation (Upper Jurassic) – Reddish-brown to light-orange very fine- to fine-grained flat bedded silty sandstone and thin-bedded silty sandstone, claystone, and siltstone; forms banded steep slopes and cliffs.

TITLE: Site Geology

PROJECT: Removal Site Evaluation
Barton 3 Mine Site

DATE: 9/28/2018

DOCUMENT NAME: Removal Site Evaluation Report

Stantec

AUTHOR: CBB

REVIEWER: EDZ

FIGURE: 2-7a

Document Path: U:\233001213\03_data\gis_cad_MXDs\RSE\RSE_Barton3\RSE_Barton3_Site_Geology_11x17_L_20180928.mxd

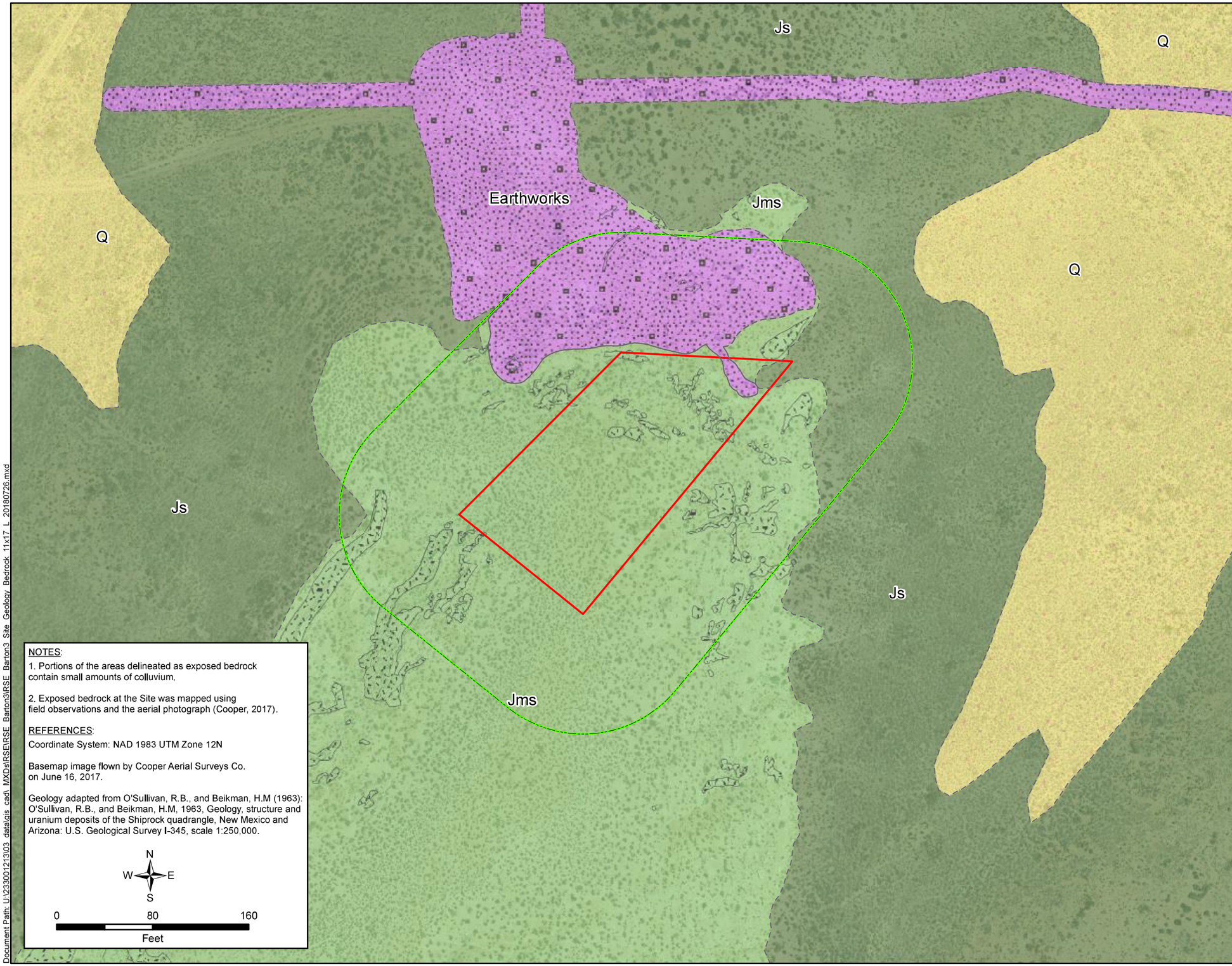

NOTES:

1. Portions of the areas delineated as exposed bedrock contain small amounts of colluvium.

2. Exposed bedrock at the Site was mapped using field observations and the aerial photograph (Cooper, 2017).

REFERENCES:

Coordinate System: NAD 1983 UTM Zone 12N

Basemap image flown by Cooper Aerial Surveys Co. on June 16, 2017.

Geology adapted from O'Sullivan, R.B., and Beikman, H.M (1963): O'Sullivan, R.B., and Beikman, H.M, 1963, Geology, structure and uranium deposits of the Shiprock quadrangle, New Mexico and Arizona: U.S. Geological Survey I-345, scale 1:250,000.

N
W E
S

0 80 160
Feet

NAVAJO NATION
AUM Environmental Response Trust-First Phase

LEGEND

Claim Boundary

100-Foot Claim Buffer

Geologic Contact (Inferred)

Exposed Bedrock[1]

Site Geology

HOLOCENE

Earthworks: Human-caused disturbance of the land surface related to mining.

Q: Quaternary Deposits – Undifferentiated (Pleistocene and Holocene) – includes sandy to gravelly colluvial and alluvial deposits, and eolian sand deposits.

JURASSIC

Jms: Salt Wash Member of the Morrison Formation (Upper Jurassic) – Yellowish gray to greenish-gray cross-bedded very fine to medium-grained calcareous sandstone inter-bedded with greenish-gray and reddish-brown claystone.

Js: Summerville Formation (Upper Jurassic) – Reddish-brown to light-orange very fine- to fine-grained flat bedded silty sandstone and thin-bedded silty sandstone, claystone, and siltstone; forms banded steep slopes and cliffs.

TITLE: Site Exposed Bedrock

PROJECT: Removal Site Evaluation Barton 3 Mine Site

DATE: 7/30/2018

DOCUMENT NAME: Removal Site Evaluation Report

Stantec

AUTHOR: CBB

REVIEWER: EDZ

FIGURE: 2-7b

Document Path: U:\233001213\03_data\gis_cad_MXDs\RSE\RSE_Barton3\RSE_Barton3_Site_Geology_Bedrock_11x17_L_20180726.mxd

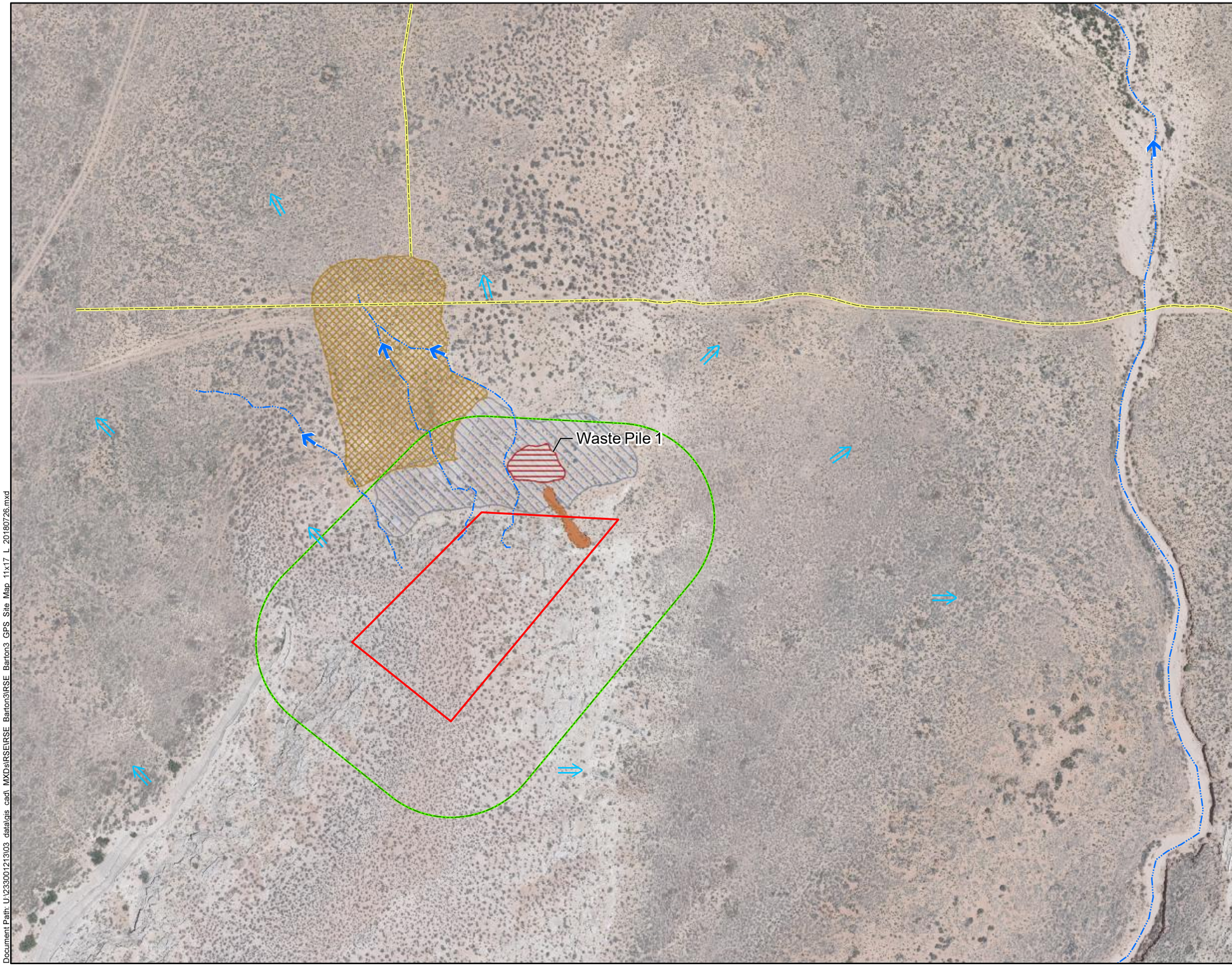

NAVAJO NATION
AUM Environmental Response Trust-First Phase

LEGEND

- Flow Direction
- Approximate Overland Water Flow Direction
- Drainage
- Potential Haul Road
- Berm
- Excavation
- Graded / Disturbed Reclaimed Area
- Waste Pile
- Claim Boundary
- 100-Foot Claim Buffer

REFERENCES:
Coordinate System: NAD 1983 UTM Zone 12N

Basemap image flown by Cooper Aerial Surveys Co. on June 16, 2017.

N W E S

0 100 200
Feet

TITLE:
Site Map

PROJECT:
Removal Site Evaluation
Barton 3 Mine Site

DATE: 7/26/2018

DOCUMENT NAME: Removal Site Evaluation Report

Stantec

AUTHOR: CBB

REVIEWER: EDZ

FIGURE: 2-8

Document Path: U:\233001213\03_data\gis_cad_MXDs\RSE\RSE_Barton3\RSE_Barton3_GPS_Site_Map_11x17_L_20180726.mxd

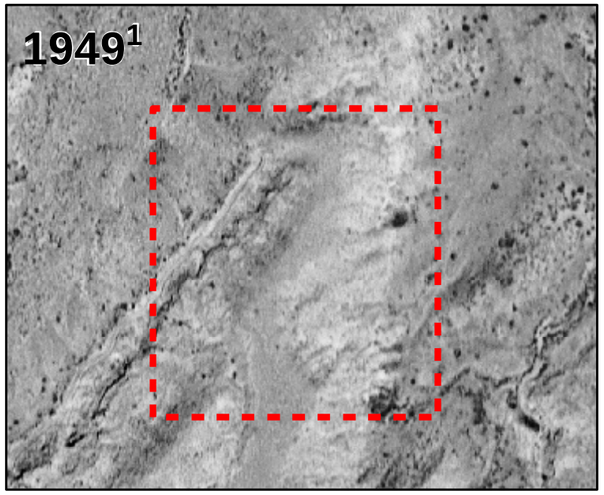

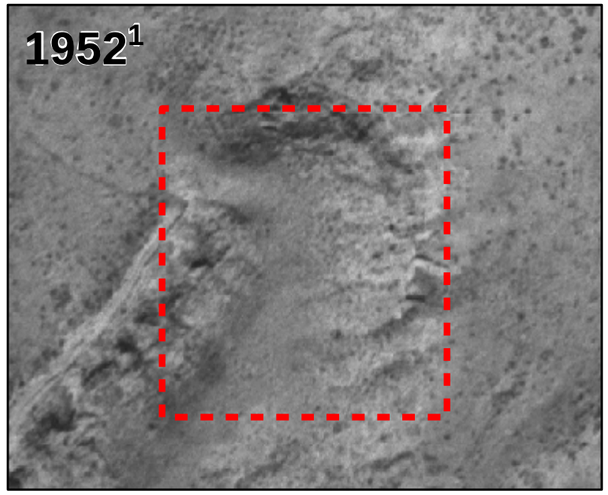

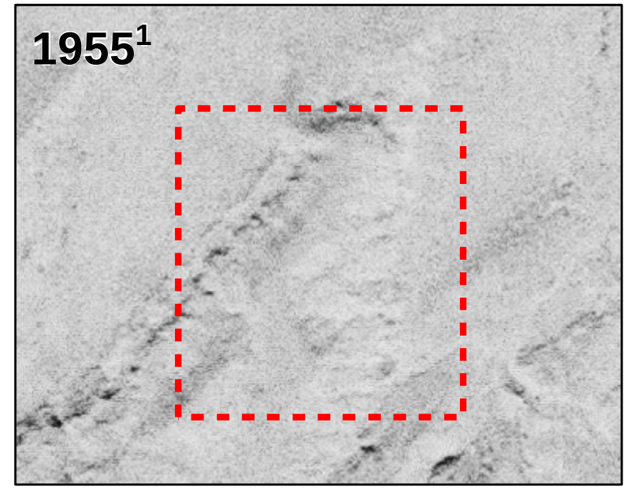

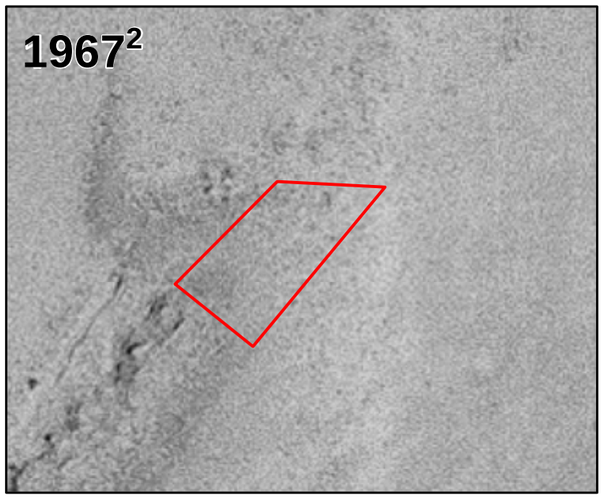

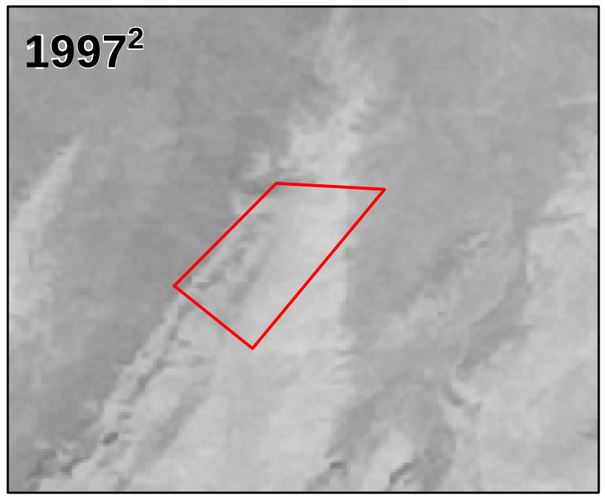

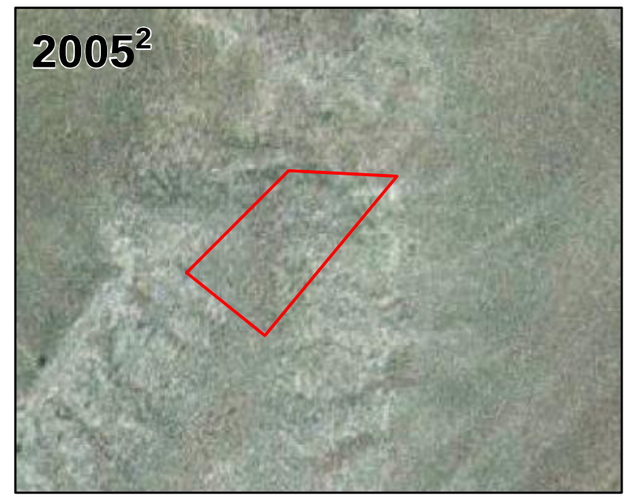

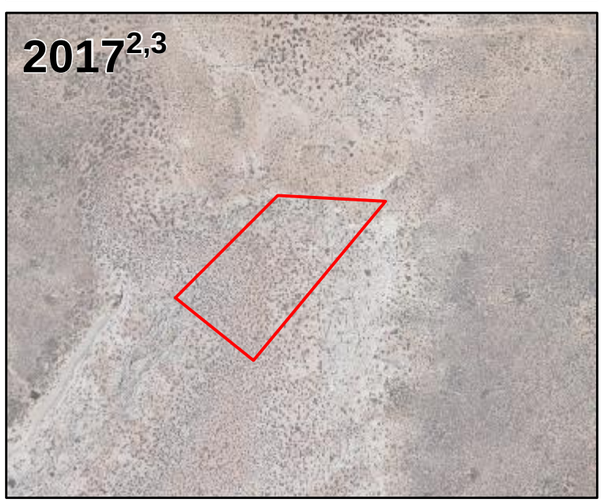

NAVAJO NATION
AUM Environmental Response Trust-First Phase

LEGEND

Barton 3 Claim Boundary

Approximate Site Location, not georeferenced

NOTES:

1. Image is not georeferenced, scale not available.

2. Image is georeferenced. Scale bar applies to these image frames only.

3. Site-specific imagery flown by Cooper Aerial Surveys Co. on June 16, 2017.

REFERENCES:

Coordinate System: NAD 1983 UTM Zone 12N

Historical Aerial Imagery downloaded from https://earthexplorer.usgs.gov/ (01/2016)

N W E S

0 200 400
Feet

TITLE:
Historical Aerial Photograph Comparison

PROJECT:
Removal Site Evaluation
Barton 3 Mine Site

DATE: 7/30/2018

DOCUMENT NAME: Removal Site Evaluation Report

Stantec

AUTHOR: EDZ

REVIEWER: CBB

FIGURE: 3-1a

Document Path: U:\233001213\03_data\gis_cad_MXDs\RSE\RSE_Barton3\RSE_Barton3_Historical_Aerial_Compilation_11x17_L_20180726.mxd

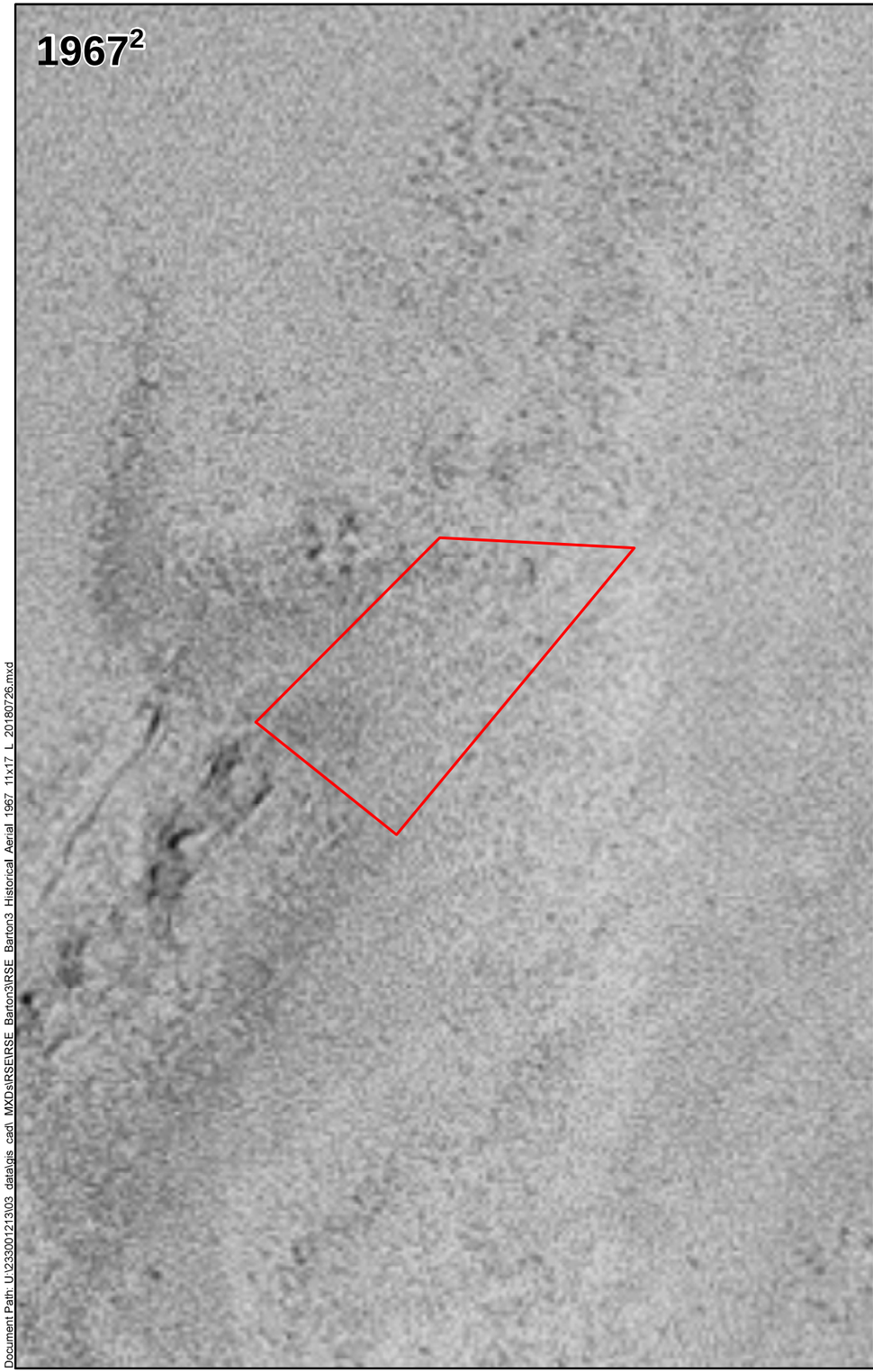

NAVAJO NATION
AUM Environmental Response Trust-First Phase

LEGEND

Claim Boundary

REFERENCES:

1. Coordinate System: NAD 1983 UTM Zone 12N

2. 1979 aerial image downloaded from https://earthexplorer.usgs.gov/ (01/2016) and georeferenced using current image from BING (03/2016).

3. Site-specific imagery flown by Cooper Aerial Surveys Co. on June 16, 2017.

N
W E
S

0 100 200
Feet

TITLE:
1967 Historical Aerial Photograph Comparison

PROJECT:
Removal Site Evaluation
Barton 3 Mine Site

DATE: 7/30/2018

DOCUMENT NAME: Removal Site Evaluation Report

Stantec

AUTHOR: CBB
REVIEWER: EDZ

FIGURE: 3-1b

Document Path: U:\233001213\03_data\gis_cad_MXDs\RSE\RSE_Barton3\RSE_Barton3_Historical_Aerial_1967_11x17_L_20180726.mxd

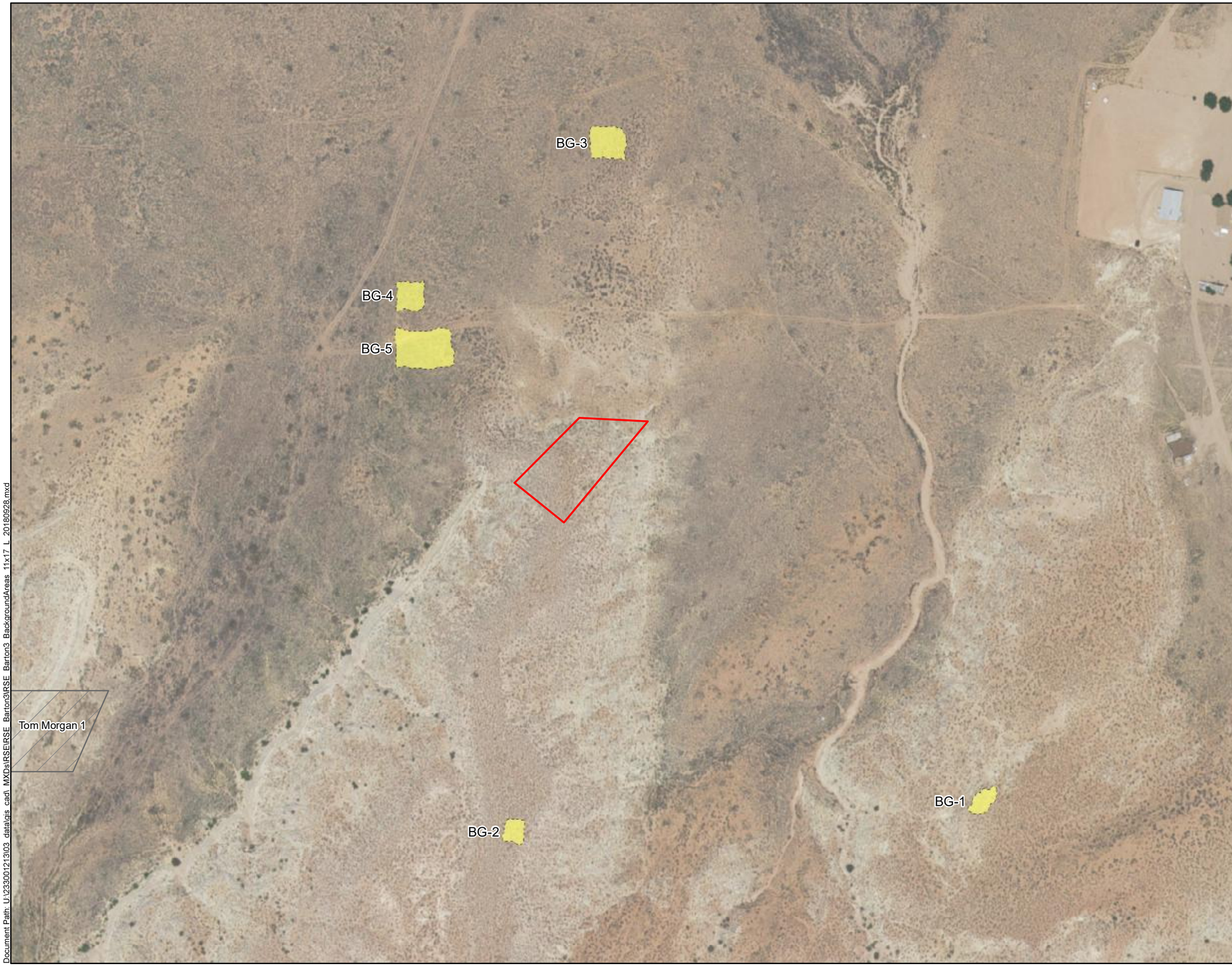

NAVAJO NATION
AUM Environmental Response Trust-First Phase

LEGEND

- Potential Background Reference Area
- Claim Boundary
- Other Claim Boundary

REFERENCES:
Coordinate System: NAD 1983 UTM Zone 12N

Basemap image accessed from the National Agriculture Imagery Program (NAIP) web mapping service (https://gis.apfo.usda.gov/arcgis/services/) on 09/2018.

N
W E
S

0 200 400
Feet

TITLE:
Potential Background Reference Areas

PROJECT:
Removal Site Evaluation
Barton 3 Mine Site

DATE: 9/28/2018

DOCUMENT NAME: Removal Site Evaluation Report

AUTHOR: CBB

REVIEWER: EDZ

Stantec

FIGURE: 3-2

Document Path: U:\233001213\03_data\gis_cad_MXDs\RSE\RSE_Barton3\RSE_Barton3_BackgroundAreas_11x17_L_20180928.mxd

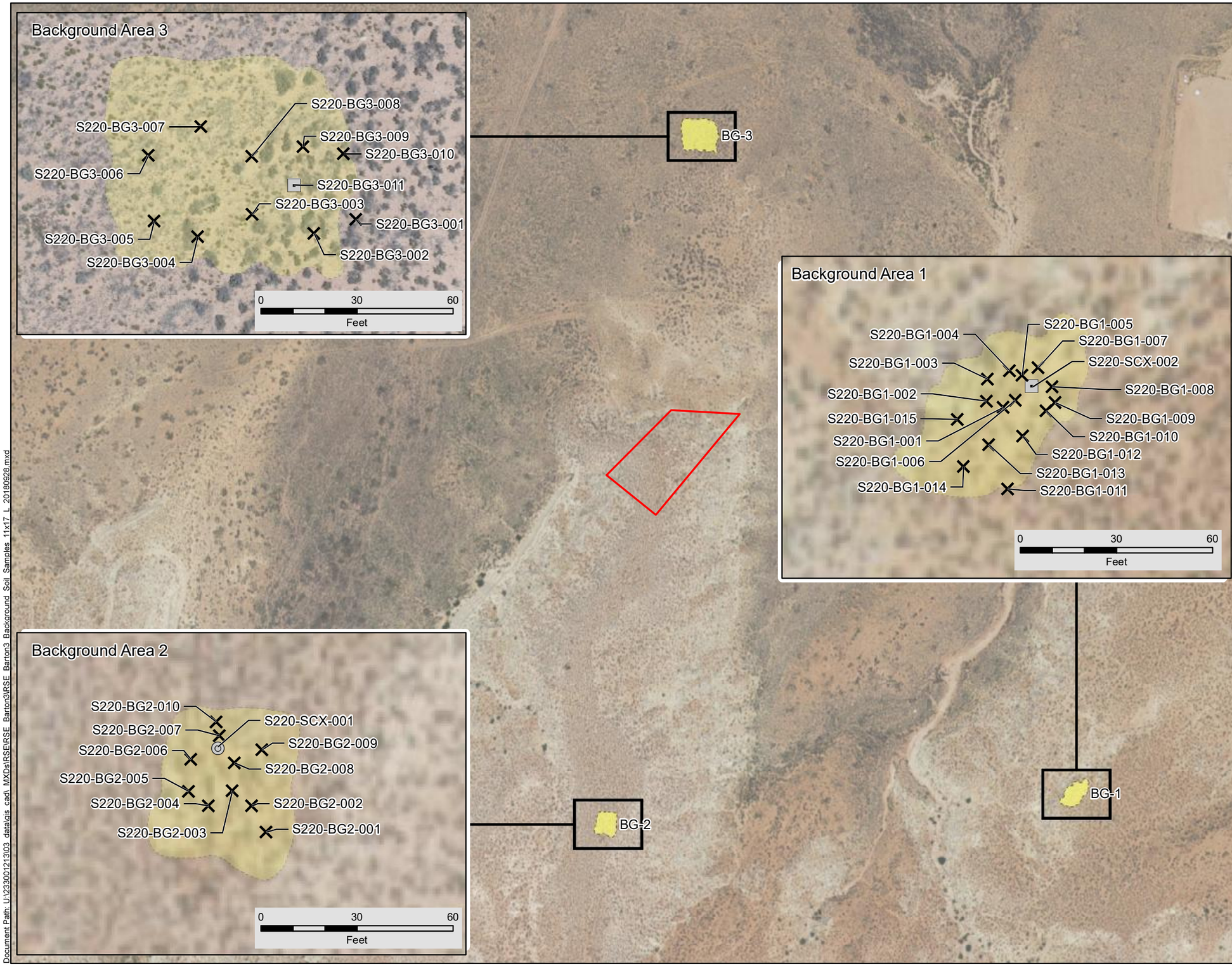

NAVAJO NATION
AUM Environmental Response Trust-First Phase

LEGEND

- Surface Sample Location
- Borehole Location - Surface and Subsurface Samples
- Borehole Location - Surface Samples Only
- Background Reference Area
- Claim Boundary

REFERENCES:
Coordinate System: NAD 1983 UTM Zone 12N

Main display and Background Area 1 and 2 basemap image accessed from the National Agriculture Imagery Program (NAIP) web mapping service (https://gis.apfo.usda.gov/arcgis/services/) on 09/2018.

Background Area 3 basemap image insets flown by Cooper Aerial Surveys Co. on June 16, 2017.

N W E S

0 200 400
Feet

TITLE:
Background Reference Areas - Sample Locations

PROJECT:
Removal Site Evaluation
Barton 3 Mine Site

DATE: 9/28/2018

DOCUMENT NAME: Removal Site Evaluation Report

AUTHOR: CBB

REVIEWER: EDZ

Stantec

FIGURE: 3-3

Document Path: U:\233001213\03_data\gis_cad_MXDs\RSE\RSE_Barton3\RSE_Barton3_Background_Soil_Samples_11x17_L_20180928.mxd

Background Reference Area associated with Survey Area	
Survey Area	Background Reference Area
A	BG-1
B	BG-3

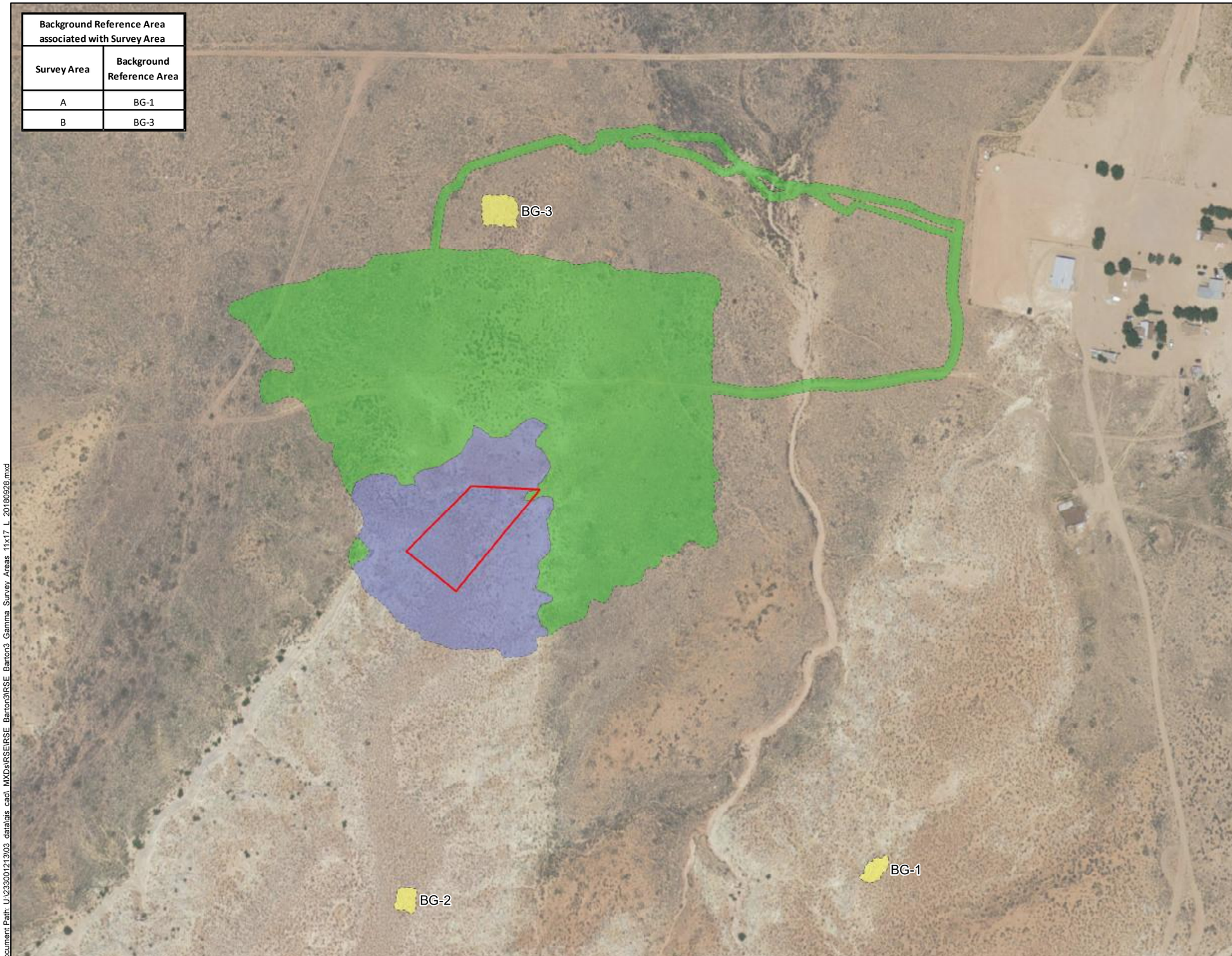

NAVAJO NATION
AUM Environmental Response Trust-First Phase

LEGEND

- Background Reference Area
- Survey Area A
- Survey Area B
- Claim Boundary

NOTE:
Gamma survey area is approximately 15.4 acres.

REFERENCES:
Coordinate System: NAD 1983 UTM Zone 12N

Basemap image accessed from the National Agriculture Imagery Program (NAIP) web mapping service (https://gis.apfo.usda.gov/arcgis/services/) on 09/2018.

N
W E
S

0 200 400
Feet

TITLE:
Gamma Radiation Survey Areas

PROJECT:
Removal Site Evaluation
Barton 3 Mine Site

DATE: 9/28/2018

DOCUMENT NAME: Removal Site Evaluation Report

Stantec

AUTHOR: CBB

REVIEWER: EDZ

FIGURE: 3-4

Document Path: U:\233001213\03_data\gis_cad_MXDs\RSE\RSE_Barton3\RSE_Barton3_Gamma_Survey_Areas_11x17_L_20180928.mxd

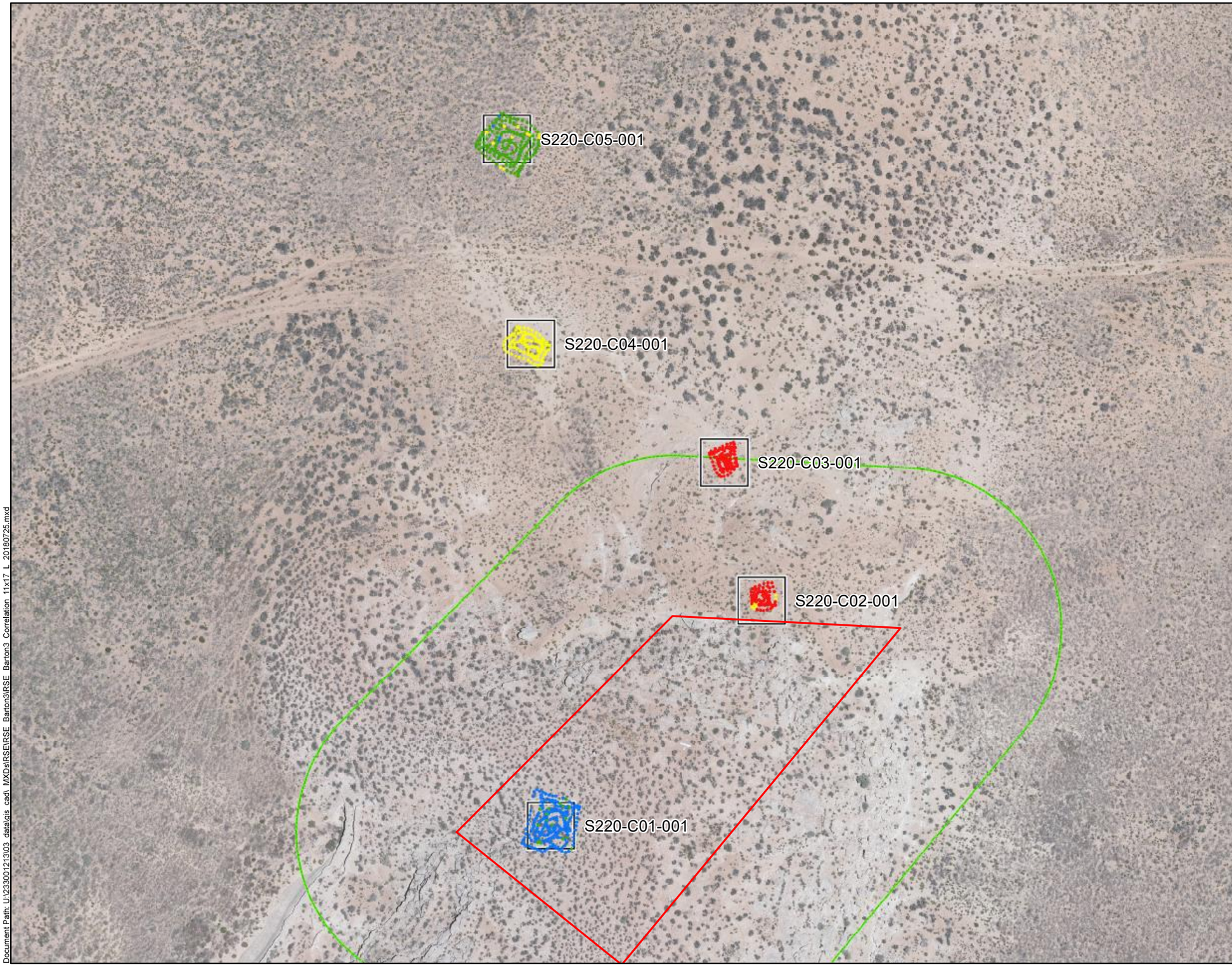

NAVAJO NATION
AUM Environmental Response Trust-First Phase

LEGEND

S220-C01-001 Correlation Location (30' x 30')

Claim Boundary

100-Foot Claim Buffer

Gamma Survey
Counts per Minute (CPM)

- 6,262 - 10,677 (Minimum to BG-3 UTL)
- 10,678 - 14,523 (>BG-3 UTL to BG-1 UTL)
- 14,524 - 21,354 (>BG-1 UTL to 2x BG-3 UTL)
- 21,355 - 39,906 (>2x BG-3 UTL to Maximum)

NOTE:
Each correlation sample consists of five grab samples collected from 0.0 - 0.5 feet below ground surface, composited together for laboratory analysis.

REFERENCES:
Coordinate System: NAD 1983 UTM Zone 12N

Basemap image flown specifically for the project by Cooper Aerial Surveys Co. on June 16, 2017.

N W E S

0 60 120
Feet

TITLE:
Gamma Correlation Study Locations

PROJECT:
Removal Site Evaluation
Barton 3 Mine Site

DATE: 7/30/2018

DOCUMENT NAME: Removal Site Evaluation Report

Stantec

AUTHOR: CBB
REVIEWER: EDZ

FIGURE: 3-5

Document Path: U:\233001213\03_data\gis_cad_MXDs\RSE\RSE_Barton3\RSE_Barton3_Correlation_11x17_L_20180725.mxd

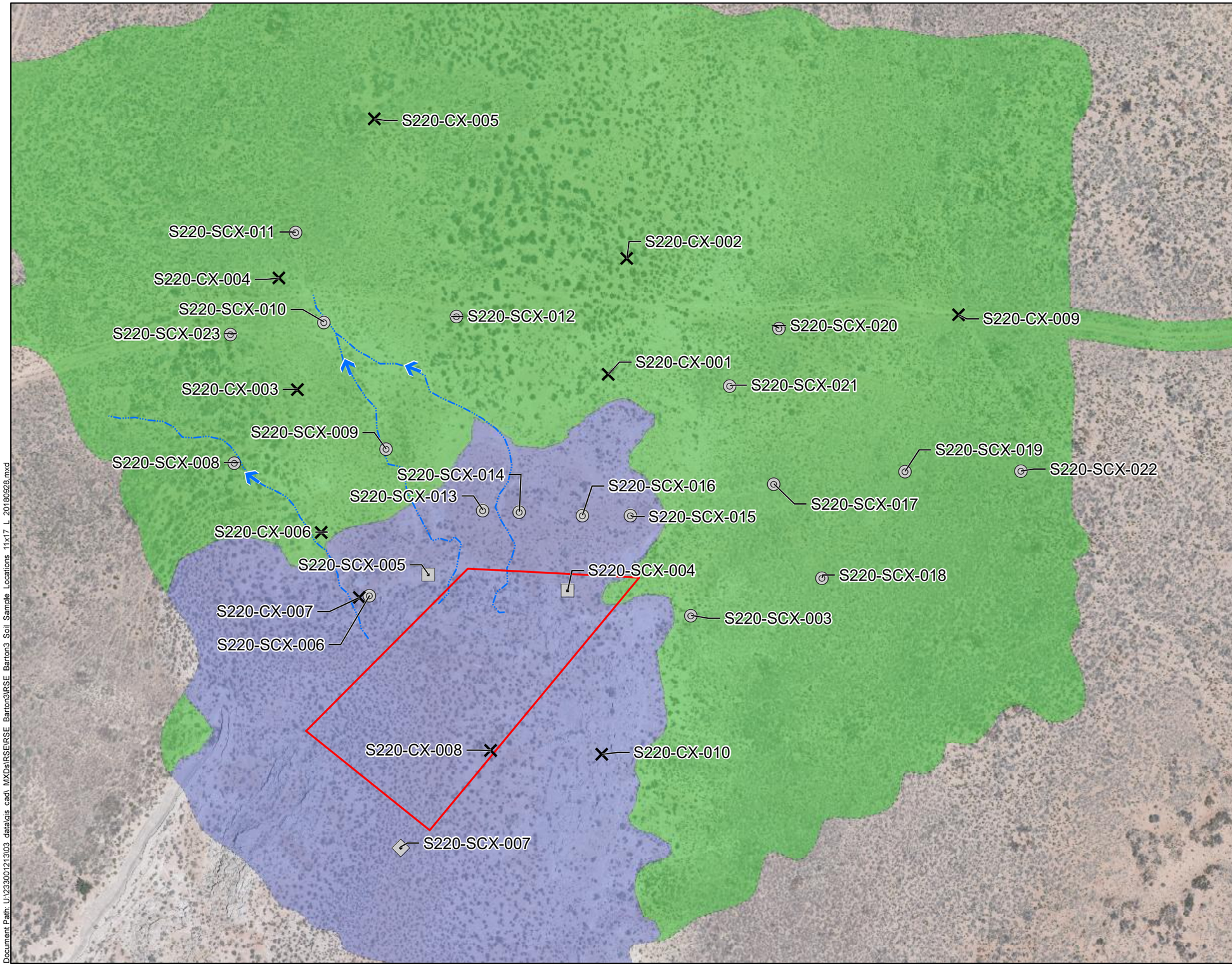

NAVAJO NATION
AUM Environmental Response Trust-First Phase

LEGEND

- Surface Sample Location
- Borehole Location - Surface and Subsurface Samples
- Borehole Location - Surface Samples Only
- Borehole Location - Subsurface Sample Only
- Flow Direction
- Drainage
- Survey Area A
- Survey Area B
- Claim Boundary

NOTES:
Surface and subsurface static gamma measurements were collected at all borehole locations.

Surface soil samples range from 0.0 - 0.5 feet below ground surface (ft bgs)

Subsurface soil samples range from 0.5 - 20.0 ft bgs

Static gamma measurements range from 0.0 - 22.0 ft bgs

REFERENCES:
Coordinate System: NAD 1983 UTM Zone 12N

Basemap image flown by Cooper Aerial Surveys Co. on June 16, 2017.

N
W E
S

0 80 160
Feet

TITLE:
Site Characterization Surface and Subsurface Sample Locations

PROJECT:
Removal Site Evaluation
Barton 3 Mine Site

DATE: 9/28/2018

DOCUMENT NAME: Removal Site Evaluation Report

Stantec

AUTHOR: CBB
REVIEWER: EDZ

FIGURE: 3-6a

Document Path: U:\233001213\03_data\gis_cad_MXDs\RSE\RSE_Barton3\RSE_Barton3_Soil_Sample_Locations_11x17_L_20180928.mxd

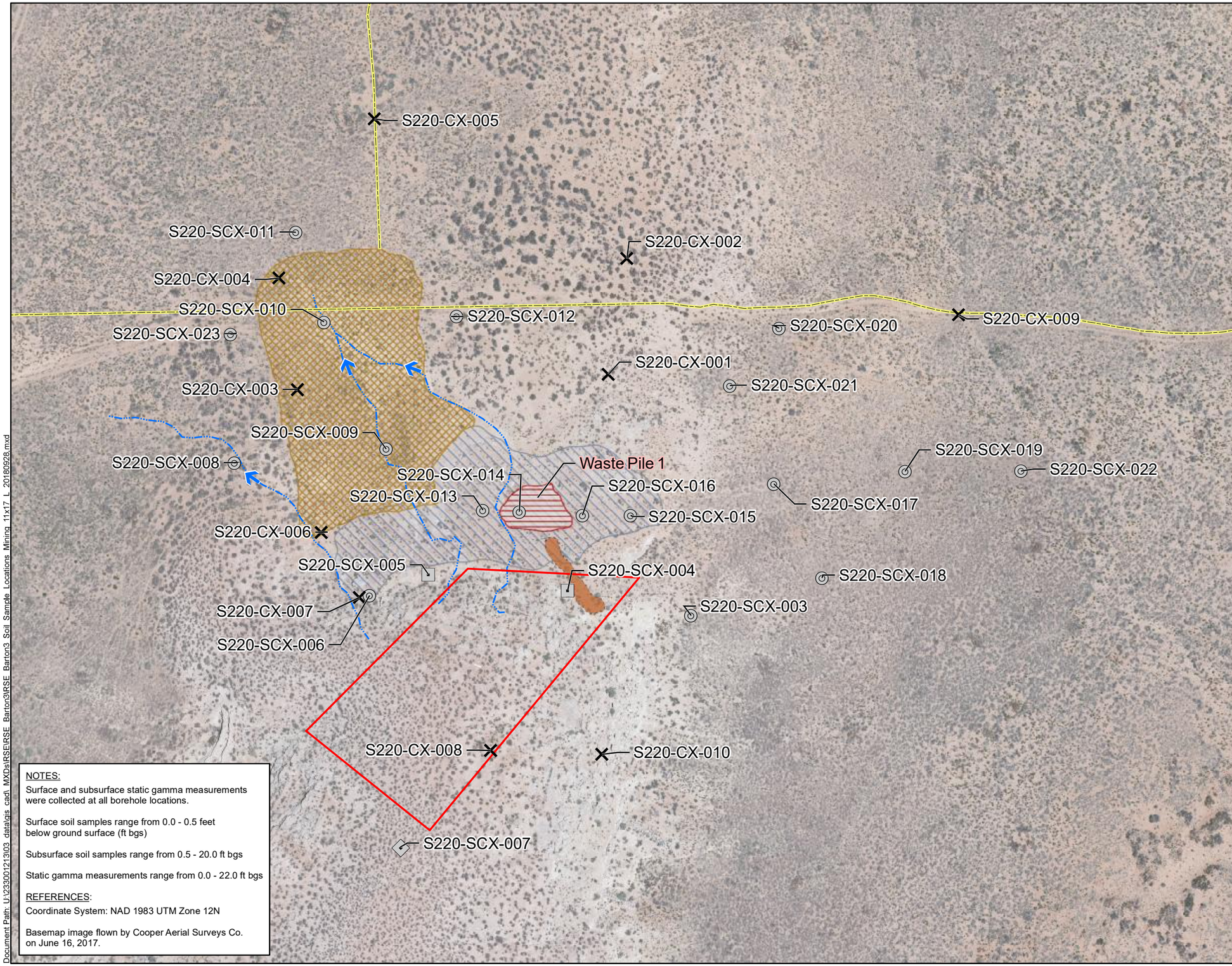

NOTES:

Surface and subsurface static gamma measurements were collected at all borehole locations.

Surface soil samples range from 0.0 - 0.5 feet below ground surface (ft bgs)

Subsurface soil samples range from 0.5 - 20.0 ft bgs

Static gamma measurements range from 0.0 - 22.0 ft bgs

REFERENCES:

Coordinate System: NAD 1983 UTM Zone 12N

Basemap image flown by Cooper Aerial Surveys Co. on June 16, 2017.

NAVAJO NATION
AUM Environmental Response Trust-First Phase

LEGEND

- Surface Sample Location
- Borehole Location - Surface and Subsurface Samples Only
- Borehole Location - Surface Samples Only
- Borehole Location - Subsurface Sample Only
- Flow Direction
- Drainage
- Potential Haul Road
- Berm
- Waste Pile
- Excavation
- Graded / Disturbed Reclaimed Area
- Claim Boundary

N W E S

0 80 160
Feet

TITLE: Sample Locations Compared to Mining-Related Features

PROJECT: Removal Site Evaluation Barton 3 Mine Site

DATE: 9/28/2018

DOCUMENT NAME: Removal Site Evaluation Report

Stantec

AUTHOR: CBB

REVIEWER: EDZ

FIGURE: 3-6b

Document Path: U:\233001213\03_data\gis_cad_MXDs\RSE\RSE_Barton3\RSE_Barton3_Soil_Sample_Locations_Mining_11x17_L_20180928.mxd

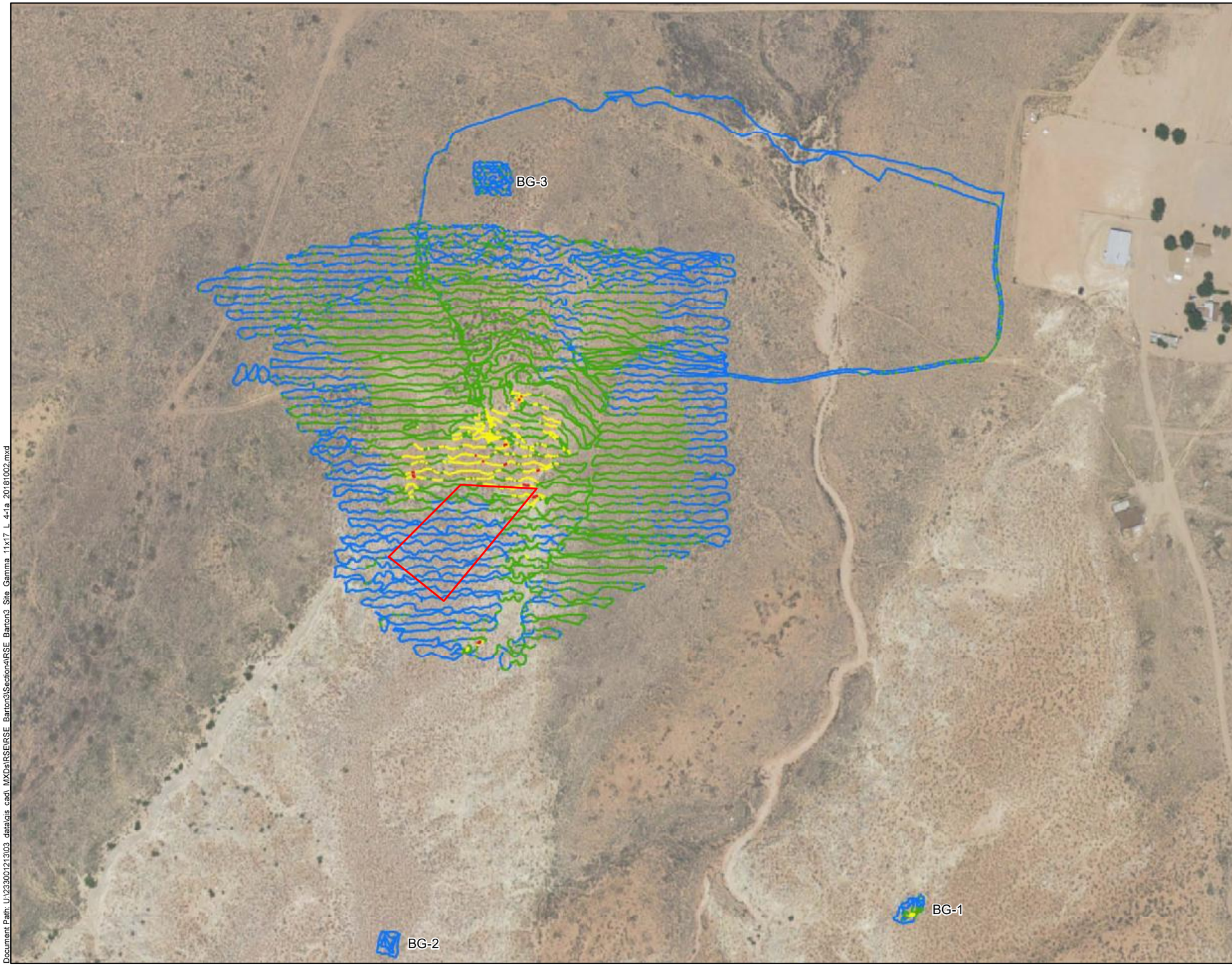

NAVAJO NATION
AUM Environmental Response Trust-First Phase

LEGEND

Claim Boundary

Other Claim Boundary

Gamma Survey

Counts per Minute (CPM)

- 5,407 - 10,677 (Minimum to BG-3 IL)
- 10,678 - 21,576 (>BG-3 IL to BG-1 IL)
- 21,577 - 43,152 (>BG-1 IL to 2x BG-3 IL)
- 43,153 - 61,743 (>2x BG-3 IL to Maximum)

NOTE:
Refer to Figure 3-4 for Survey Area delineation.

REFERENCES:
Coordinate System: NAD 1983 UTM Zone 12N

Basemap image accessed from the National Agriculture Imagery Program (NAIP) web mapping service (https://gis.apfo.usda.gov/arcgis/services/) on 10/2/2018

N W E S

0 180 360
Feet

TITLE:
Gamma Radiation Survey Results

PROJECT:
Removal Site Evaluation
Barton 3 Mine Site

DATE: 10/2/2018	DOCUMENT NAME: Removal Site Evaluation Report	
Stantec	AUTHOR: AS	REVIEWER: CBB
	FIGURE: 4-1a	

Document Path: U:\233001213\03_data\gis_cad_MXDs\RSE\RSE_Barton3\Section4\RSE_Barton3_Site_Gamma_11x17_L_4-1a_20181002.mxd

NOTE:
BG-2 IL value are included for discussion purposes.

REFERENCES:
Coordinate System: NAD 1983 UTM Zone 12N

Basemap image accessed from the National Agriculture Imagery Program (NAIP) web mapping service (https://gis.apfo.usda.gov/arcgis/services/) on 10/2018.

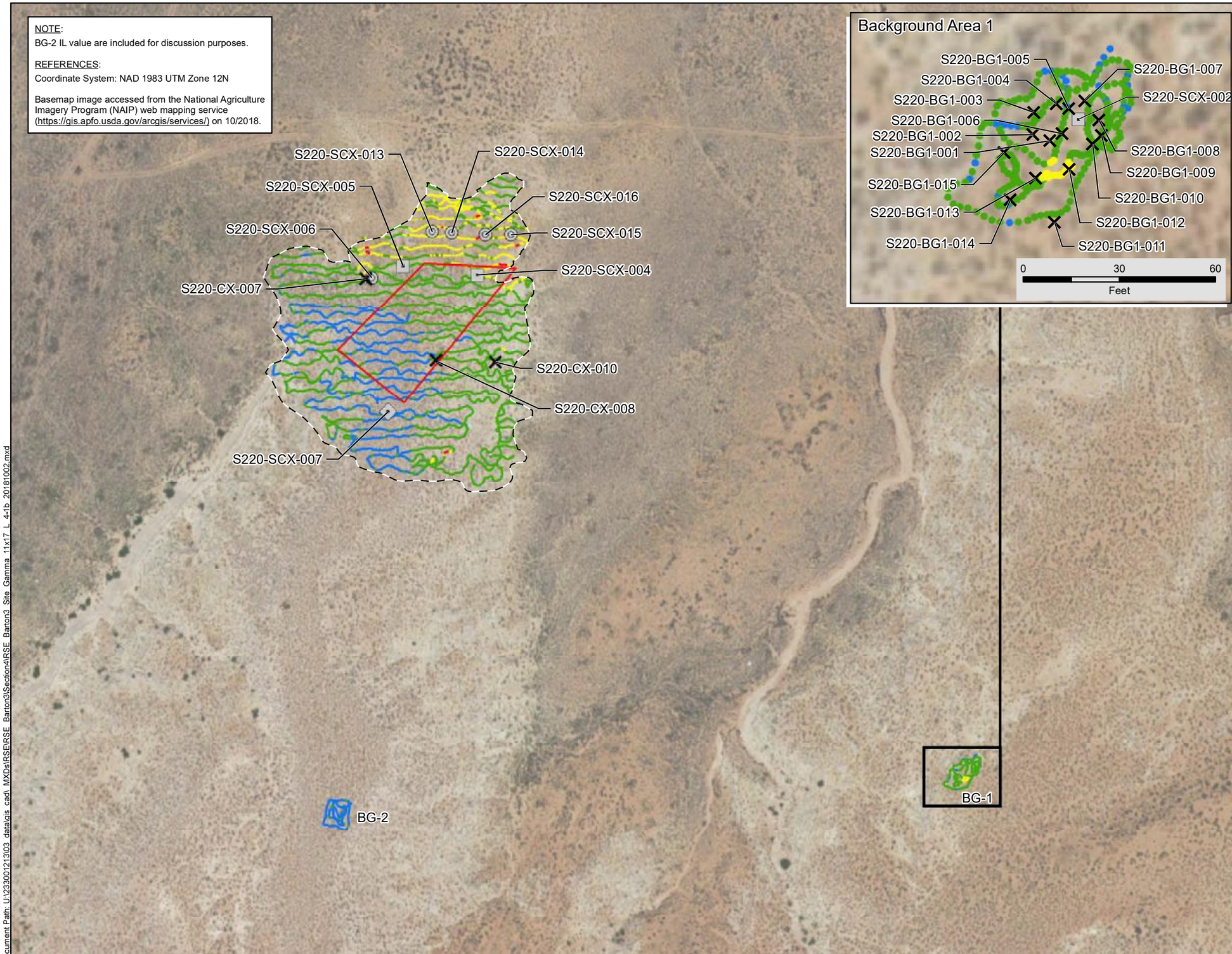

NAVAJO NATION
AUM Environmental Response Trust-First Phase

LEGEND

- Surface Sample Location
- Borehole Location - Surface and Subsurface Samples
- Borehole Location - Surface Samples Only
- Borehole Location - Subsurface Sample Only
- Survey Area A
- Claim Boundary

Gamma Survey

Counts per Minute (CPM)

- 5,407 - 8,395 (Minimum to BG-2 IL)
- 8,396 - 21,576 (>BG-2 IL to BG-1 IL)
- 21,577 - 43,152 (>BG-1 IL to 2x BG-1 IL)
- 43,153 - 61,743 (>2x BG-1 IL to Maxiumum)

N
W E
S

0 150 300
Feet

TITLE:
Gamma Radiation Survey Results for Survey Area A

PROJECT:
Removal Site Evaluation
Barton 3 Mine Site

DATE: 10/4/2018

DOCUMENT NAME: Removal Site Evaluation Report

Stantec

AUTHOR: AS

REVIEWER: CBB

FIGURE: 4-1b

Document Path: U:\233001213\03_data\gis_cad_MXDs\RSE\RSE_Barton3\Section4\RSE_Barton3_Site_Gamma_11x17_L_4-1b_20181002.mxd

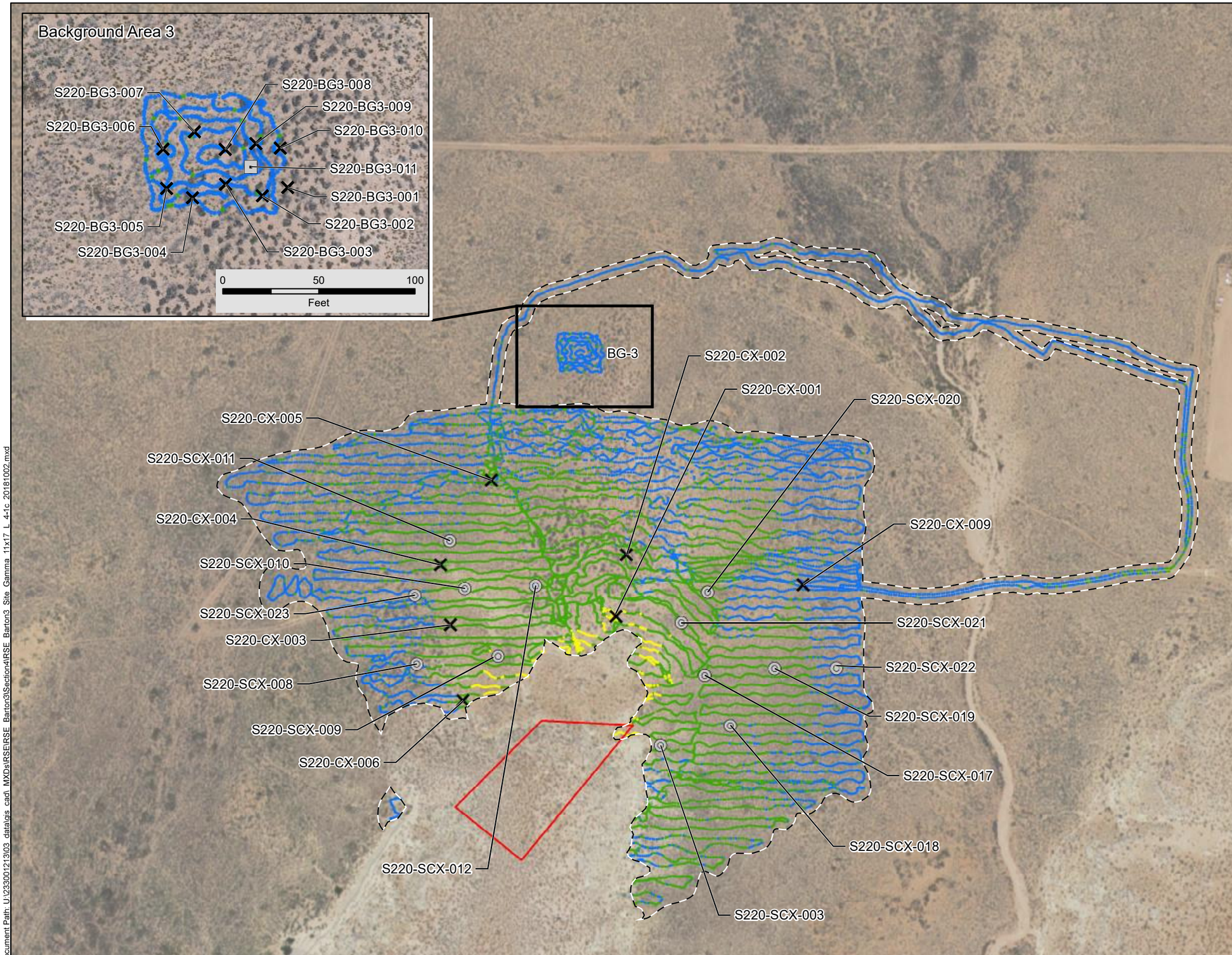

NAVAJO NATION
AUM Environmental Response Trust-First Phase

LEGEND

- Surface Sample Location
- Borehole Location - Surface and Subsurface Samples
- Borehole Location - Surface Samples Only
- Survey Area B
- Claim Boundary

Gamma Survey

Counts per Minute (CPM)

- 6,536 - 10,677 (Minium to BG-3 IL)
- 10,678 - 21,354 (>BG-3 IL to 2x BG-3 IL)
- 21,355 - 54,971 (>2x BG-3 IL to Maximum)

REFERENCES:
Coordinate System: NAD 1983 UTM Zone 12N

Main display basemap image accessed from the National Agriculture Imagery Program (NAIP) web mapping service (https://gis.apfo.usda.gov/arcgis/services/) on 10/2018.

Inset basemap image flown by Cooper Aerial Surveys Co. on June 16, 2017.

N W E S

0 150 300
Feet

TITLE:
Gamma Radiation Survey Results for Survey Area B

PROJECT:
Removal Site Evaluation
Barton 3 Mine Site

DATE: 10/18/2018	DOCUMENT NAME: Removal Site Evaluation Report	
Stantec	AUTHOR: AS	REVIEWER: CBB
	FIGURE: 4-1c	

Document Path: U:\233001213\03_data\gis_cad_MXDs\RSE\RSE_Barton3\Section4\RSE_Barton3_Site_Gamma_11x17_L_4-1c_20181002.mxd

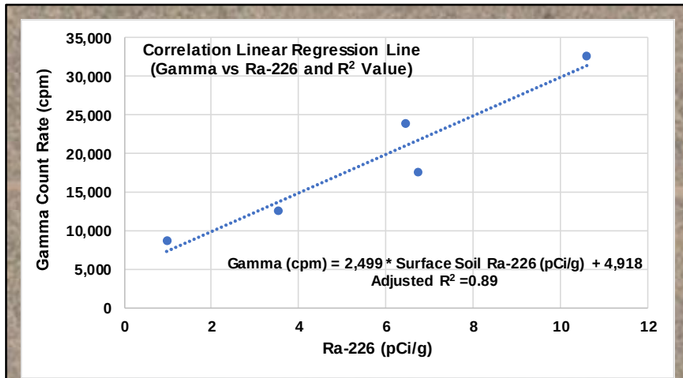

Correlation Data

Sample ID	Ra-226 (pCi/g)	Mean Gamma Count Rate (cpm)[1]
S220-C01-001	0.98	8,673
S220-C02-001	6.44	23,849
S220-C03-001	10.6	32,608
S220-C04-001	6.73	17,557
S220-C05-001	3.52	12,564

[1] Average gamma count rate for a correlation

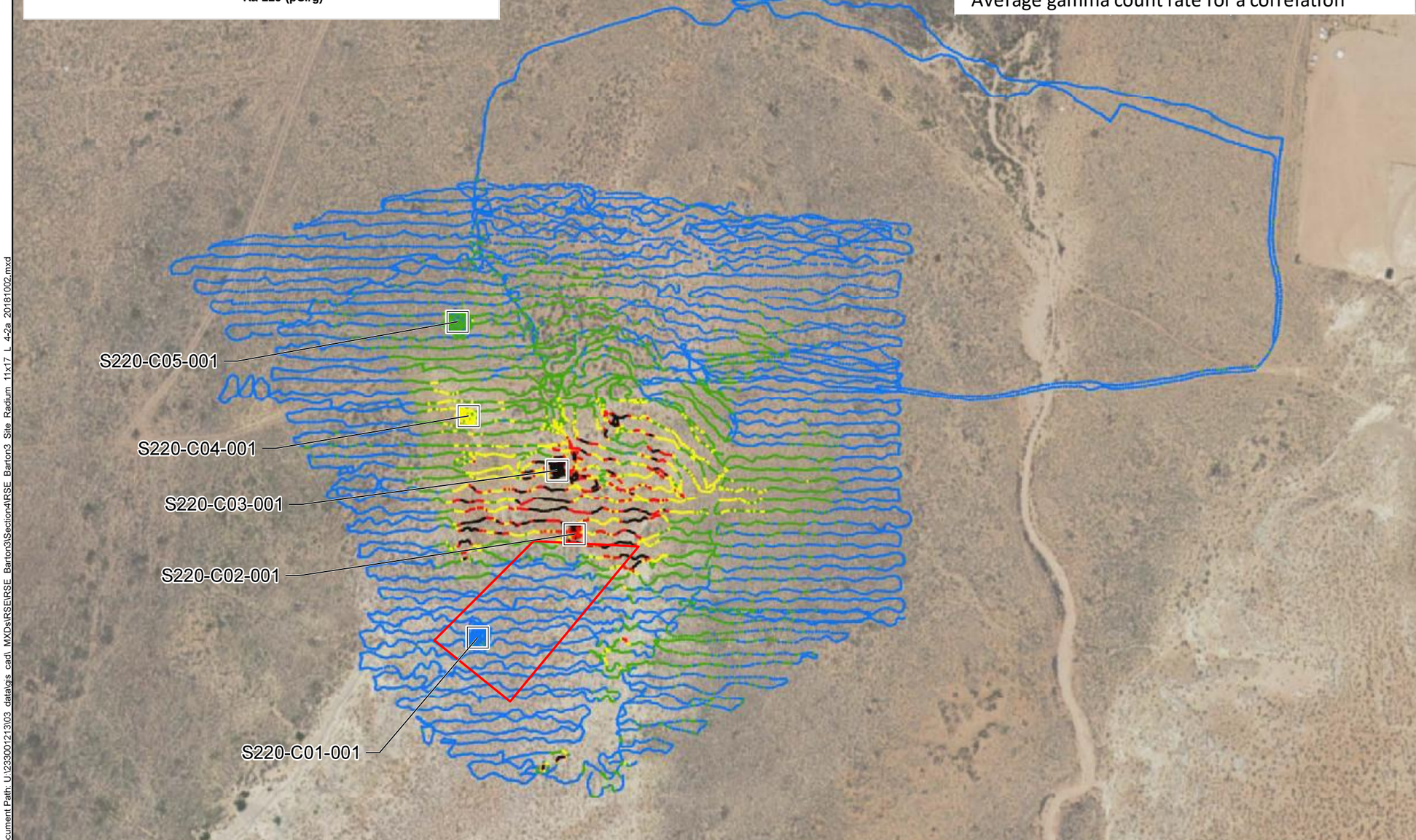

NAVAJO NATION
AUM Environmental Response Trust-First Phase

LEGEND

S220-C01-001 Correlation Location (30' x 30')

Claim Boundary

Predicted Ra-226 Concentrations[1] (pCi/g)

- 0.4 - 2.9 (μ)[2]
- 3.0 - 4.8 (μ + 1σ[3])
- 4.9 - 6.7 (μ + 2σ)
- 6.8 - 8.6 (μ + 3σ)
- 8.7 - 22.7

NOTES:

1. Surface gamma survey measurements were converted to predicted Ra-226 concentrations using the following correlation equation: Gamma (cpm) = 2,499 x Surface Soil Ra-226 (pCi/g) + 4,918

2. Mean (μ) of predicted concentrations of Ra-226 in soil (2.9 pCi/g).

3. Standard deviation (σ) of predicted concentrations of Ra-226 in soil (1.9 pCi/g).

4. Ra-226 concentrations predicted from gamma measurements exceeding approximately 33,000 CPM or less than approximately 9,000 CPM are extrapolated from the regression model and are uncertain.

REFERENCES:

Coordinate System: NAD 1983 UTM Zone 12N

Basemap image accessed from the National Agriculture Imagery Program (NAIP) web mapping service (https://gis.apfo.usda.gov/arcgis/services/) on 10/2018.

N W E S

0 150 300
Feet

TITLE:
Predicted Concentrations of Ra-226 in Soil using Correlation Equation

PROJECT:
Removal Site Evaluation
Barton 3 Mine Site

DATE: 10/2/2018

DOCUMENT NAME: Removal Site Evaluation Report

Stantec

AUTHOR: AS

REVIEWER: CBB

FIGURE: 4-2a

Document Path: U:\233001213\03_data\gis_cad_MXDs\RSE\RSE_Barton3\Section4\RSE_Barton3_Site_Radium_11x17_L_4-2a_20181002.mxd

NOTES:

1. The number in parantheses following sample location IDs represents the Ra-226 laboratory concentration in a soil/sediment sample collected between 0.0 and 0.5 ft bgs at that location

2. Surface gamma survey measurements were converted to predicted Ra-226 concentrations using the following correlation equation: Gamma (cpm) =
2,499 x Surface Soil Ra-226 (pCi/g) + 4,918

3. Mean (μ) of predicted concentrations of Ra-226 in soil (2.9 pCi/g).

4. Standard deviation (σ) of predicted concentrations of Ra-226 in soil (1.9 pCi/g).

5. Ra-226 concentrations predicted from gamma measurements exceeding approximately 33,000 CPM or less than approximately 9,000 CPM are extrapolated from the regression model and are uncertain.

REFERENCES:

Coordinate System: NAD 1983 UTM Zone 12N

Basemap image accessed from the National Agriculture Imagery Program (NAIP) web mapping service (https://gis.apfo.usda.gov/arcgis/services/) on 10/2018.

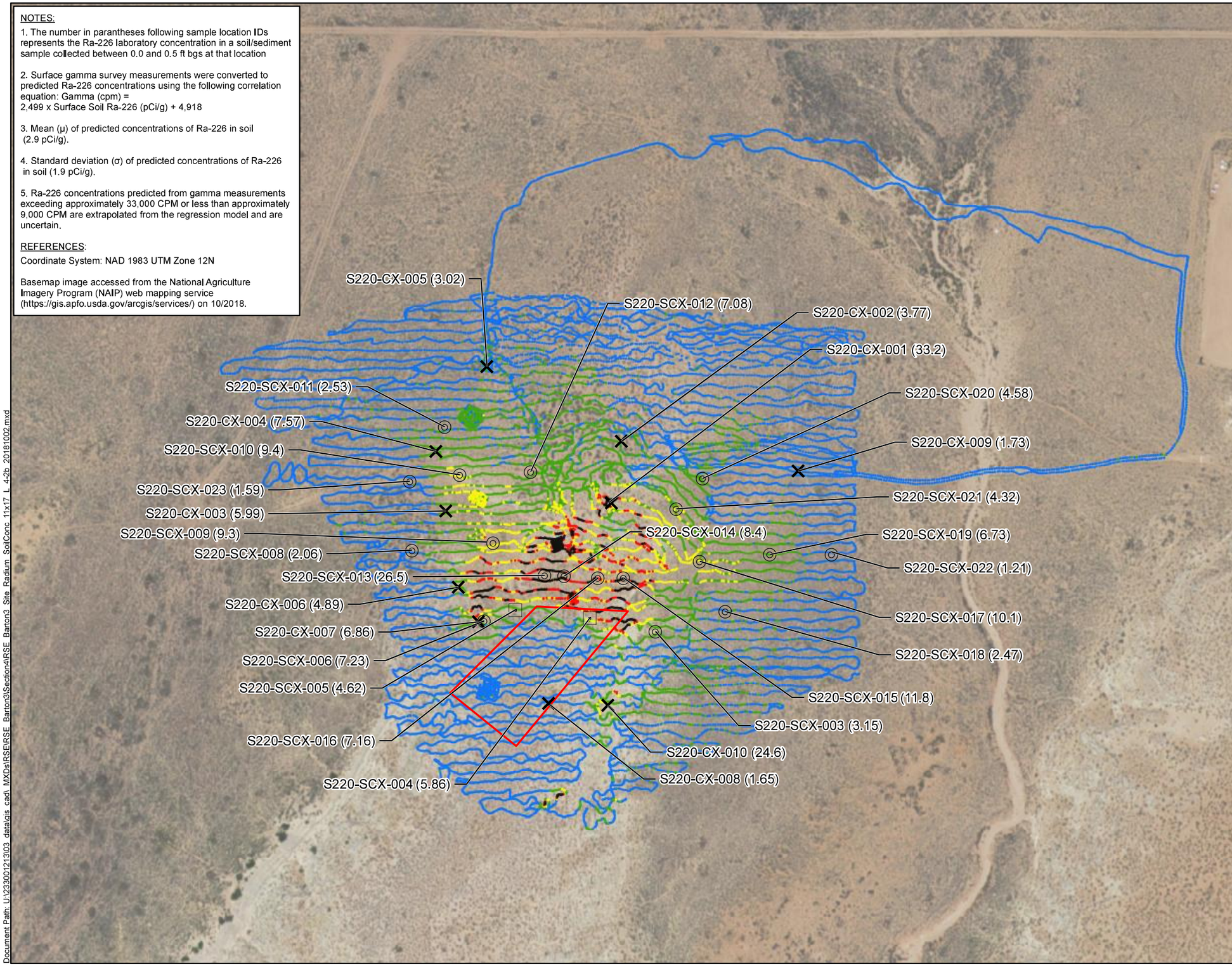

NAVAJO NATION
AUM Environmental Response Trust-First Phase

LEGEND

- Surface Sample Location
- Borehole Location - Surface and Subsurface Samples
- Borehole Location - Surface Samples Only
- Claim Boundary

Predicted Ra-226 Concentrations[2] (pCi/g)

- 0.4 - 2.9 (μ)[3]
- 3.0 - 4.8 (μ + 1σ[4])
- 4.9 - 6.7 (μ + 2σ)
- 6.8 - 8.6 (μ + 3σ)
- 8.7 - 22.7

N W E S

0 150 300
Feet

TITLE: Predicted Ra-226 Concentrations in Soil Compared to Ra-226 Concentrations in Soil/Sediment

PROJECT: Removal Site Evaluation Barton 3 Mine Site

DATE: 10/8/2018

DOCUMENT NAME: Removal Site Evaluation Report

Stantec

AUTHOR: AS

REVIEWER: CBB

FIGURE: 4-2b

Document Path: U:\233001213\03_data\gis_cad_MXDs\RSE\RSE_Barton3\Section4\RSE_Barton3_Site_Radium_SoilConc_11x17_L_4-2b_20181002.mxd

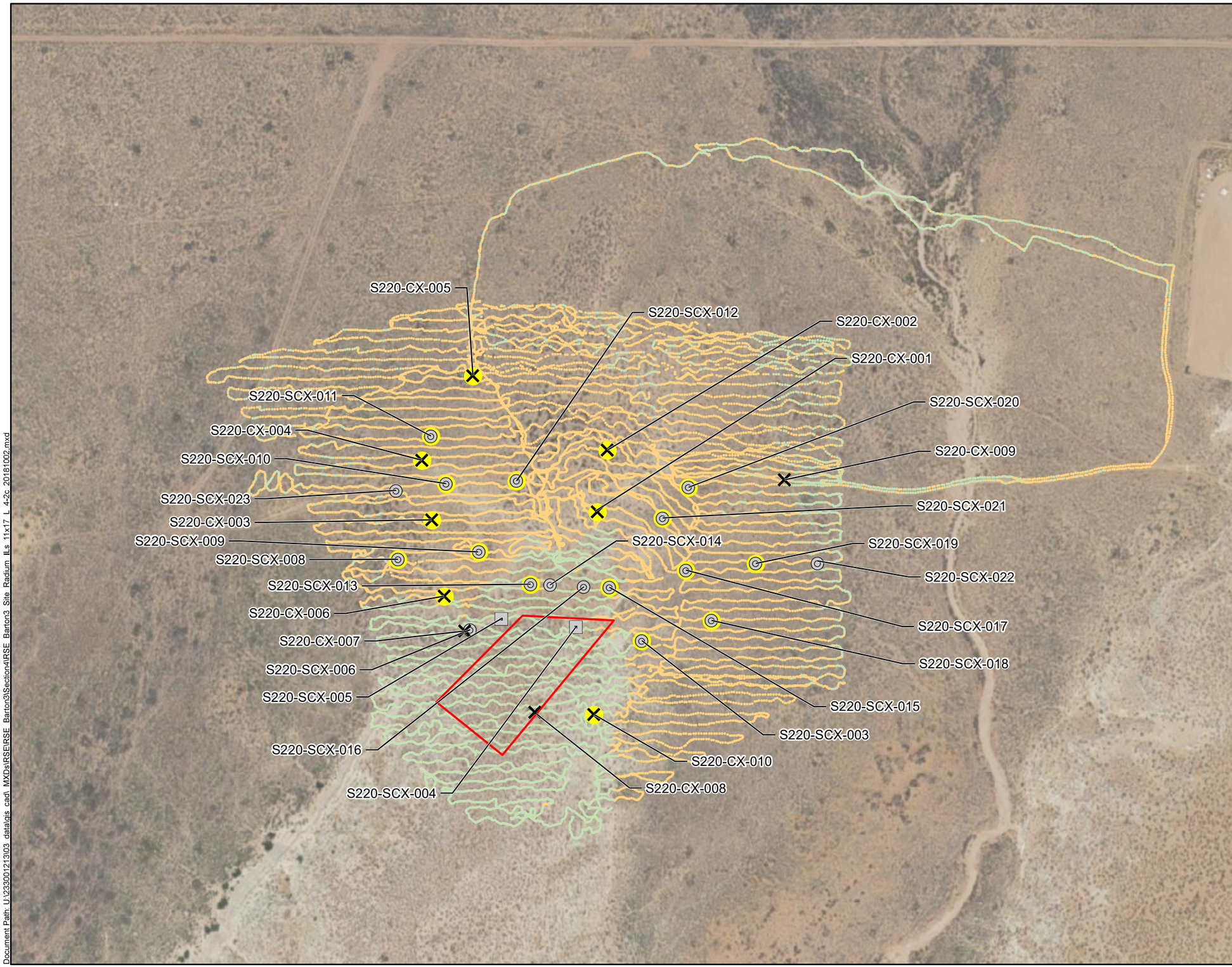

NAVAJO NATION
AUM Environmental Response Trust-First Phase

LEGEND

- Surface Sample Location
- Borehole Location - Surface and Subsurface Samples
- Borehole Location - Surface Samples Only
- Ra-226 IL Exceedance in Surface Soil
- Claim Boundary

Predicted Ra-226 Concentrations (pCi/g)

- IL Not Exceeded
  Survey Area A: 0.4 - 11.7
  Survey Area B: 0.6 - 1.77
- IL Exceeded
  Survey Area A: 11.9 - 22.7
  Survey Area B: 1.78 - 20.0

NOTES:

1. Surface gamma survey measurements were converted to predicted Ra-226 concentrations using the following correlation equation: Gamma (cpm) =
2,499 x Surface Soil Ra-226 (pCi/g) + 4,918

2. Refer to Figure 3-4 for Survey Area delineation.

REFERENCES:

Coordinate System: NAD 1983 UTM Zone 12N

Basemap image accessed from the National Agriculture Imagery Program (NAIP) web mapping service (https://gis.apfo.usda.gov/arcgis/services/) on 10/2018.

N
W E
S

0 150 300
Feet

TITLE:

Predicted Ra-226 Concentrations in Soil Compared to Ra-226 ILs

PROJECT:

Removal Site Evaluation
Barton 3 Mine Site

DATE: 10/2/2018	DOCUMENT NAME: Removal Site Evaluation Report	
Stantec	AUTHOR: AS	REVIEWER: CBB
	FIGURE: 4-2c	

Document Path: U:\233001213\03_data\gis_cad_MXDs\RSE\RSE_Barton3\Section4\RSE_Barton3_Site_Radium_ILs_11x17_L_4-2c_20181002.mxd

Soil and Sediment Investigation Levels		
	Investigation Level	
Analyte (Units)	Survey Area A	Survey Area B
Metals (mg/kg)		
Arsenic	3.83	1.50
Molybdenum	0.332	0.367
Selenium	NA	NA
Uranium	6.36	1.13
Vanadium	16.0	12.6
Radionuclides (pCi/g)		
Radium-226	11.8	1.77
NA - No IL was established because Se was not detected in		

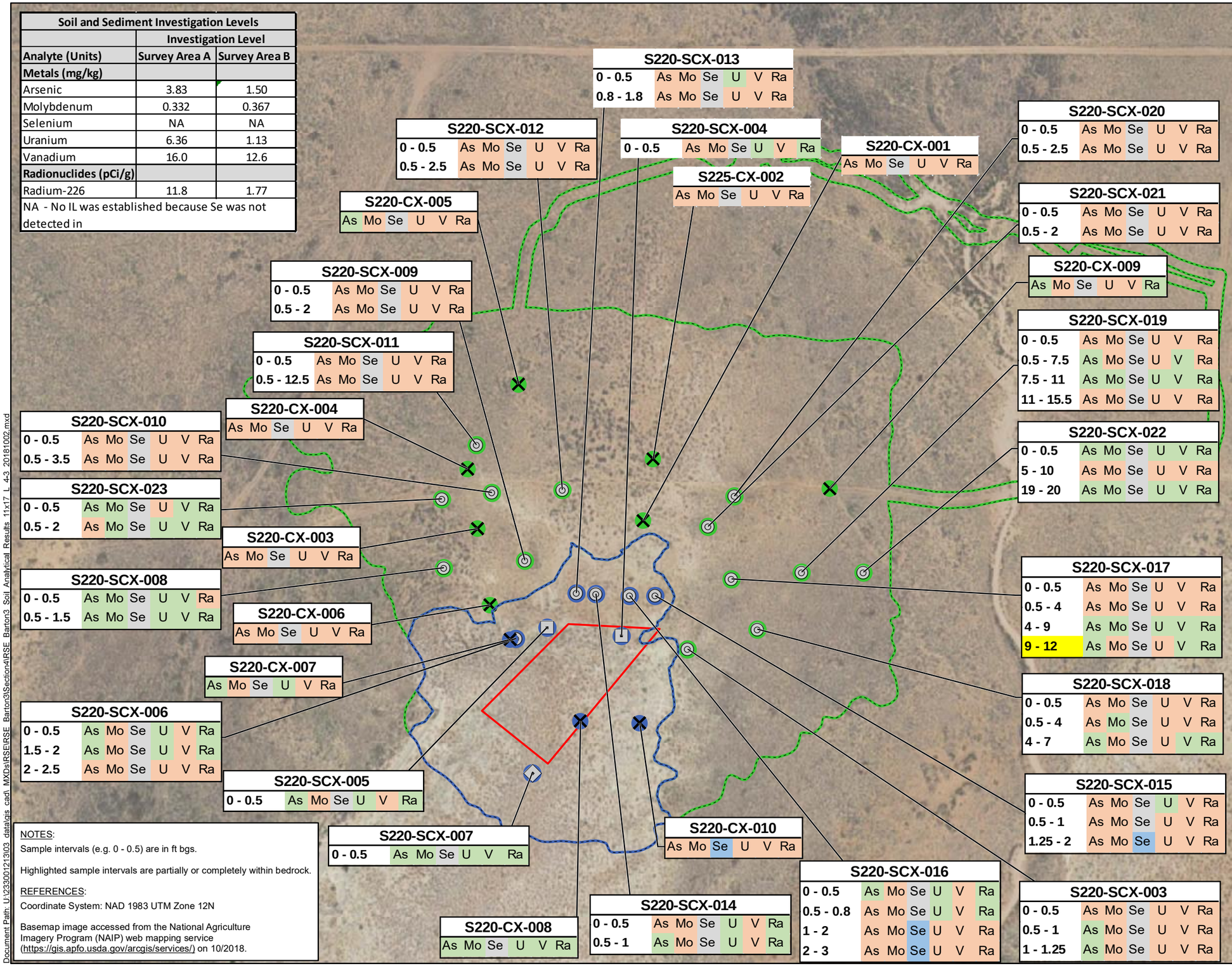

NOTES:
Sample intervals (e.g. 0 - 0.5) are in ft bgs.

Highlighted sample intervals are partially or completely within bedrock.

REFERENCES:
Coordinate System: NAD 1983 UTM Zone 12N

Basemap image accessed from the National Agriculture Imagery Program (NAIP) web mapping service (https://gis.apfo.usda.gov/arcgis/services/) on 10/2018.

NAVAJO NATION
AUM Environmental Response Trust-First Phase

LEGEND

- Survey Area A - Surface Sample Location
- Survey Area A - Borehole Location - Surface and Subsurface Samples
- Survey Area A - Borehole Location - Surface Samples Only
- Survey Area A - Borehole Location - Subsurface Sample Only
- Survey Area B - Surface Sample Location
- Survey Area B - Borehole Location - Surface and Subsurface Samples
- Survey Area A
- Survey Area B
- Claim Boundary
- Investigation Level Not Exceeded
- Investigation Level Exceeded
- Analyte Detected - No Investigation Level
- Non-detect - No Investigation Level

N W E S

0 150 300
Feet

TITLE:
Surface and Subsurface Metals and Ra-226 Analytical Results

PROJECT:
Removal Site Evaluation
Barton 3 Mine Site

DATE: 10/2/2018

DOCUMENT NAME: Removal Site Evaluation Report

Stantec

AUTHOR: AS
REVIEWER: CBB

FIGURE: 4-3

Document Path: U:\233001213\03_data\gis_cad_MXDs\RSE\RSE_Barton3\Section4\RSE_Barton3_Soil_Analytical_Results_11x17_L_4-3_20181002.mxd

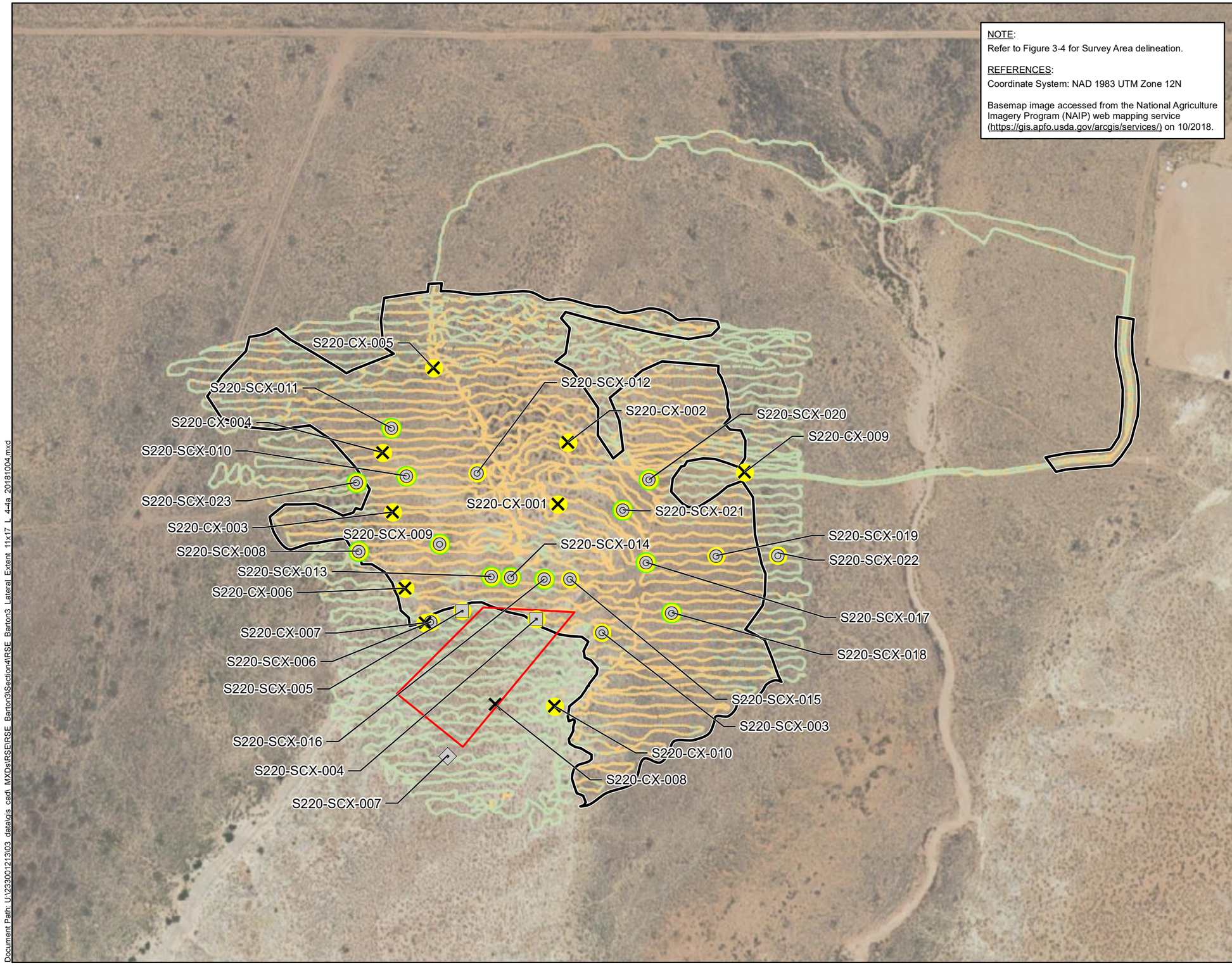

NOTE:
Refer to Figure 3-4 for Survey Area delineation.

REFERENCES:
Coordinate System: NAD 1983 UTM Zone 12N

Basemap image accessed from the National Agriculture Imagery Program (NAIP) web mapping service (https://gis.apfo.usda.gov/arcgis/services/) on 10/2018.

NAVAJO NATION
AUM Environmental Response Trust-First Phase

LEGEND

- Surface Sample Location
- Borehole Location - Surface and Subsurface Samples
- Borehole Location - Surface Samples Only
- Borehole Location - Subsurface Sample Only
- IL Exceedance in Unconsolidated Material at Location
- IL Exceedance in Bedrock in Borehole
- Approximate Area where Surface Gamma ILs are Exceeded (8.4 acres)
- Claim Boundary

Gamma Survey

Counts per Minute (CPM)

IL Not Exceeded
Survey Area A: 5,930 - 21,576
Survey Area B: 6,536 - 10,677

IL Exceeded
Survey Area A: 21,577 - 61,743
Survey Area B: 10,678 - 54,971

N W E S

0 150 300
Feet

TITLE:
Lateral Extent of Surface and Subsurface IL Exceedances

PROJECT:
Removal Site Evaluation
Barton 3 Mine Site

DATE: 10/4/2018

DOCUMENT NAME: Removal Site Evaluation Report

Stantec

AUTHOR: AS

REVIEWER: CBB

FIGURE: 4-4a

Document Path: U:\233001213\03_data\gis_cad_MXDs\RSE\RSE_Barton3\Section4\RSE_Barton3_Lateral_Extent_11x17_L_4-4a_20181004.mxd

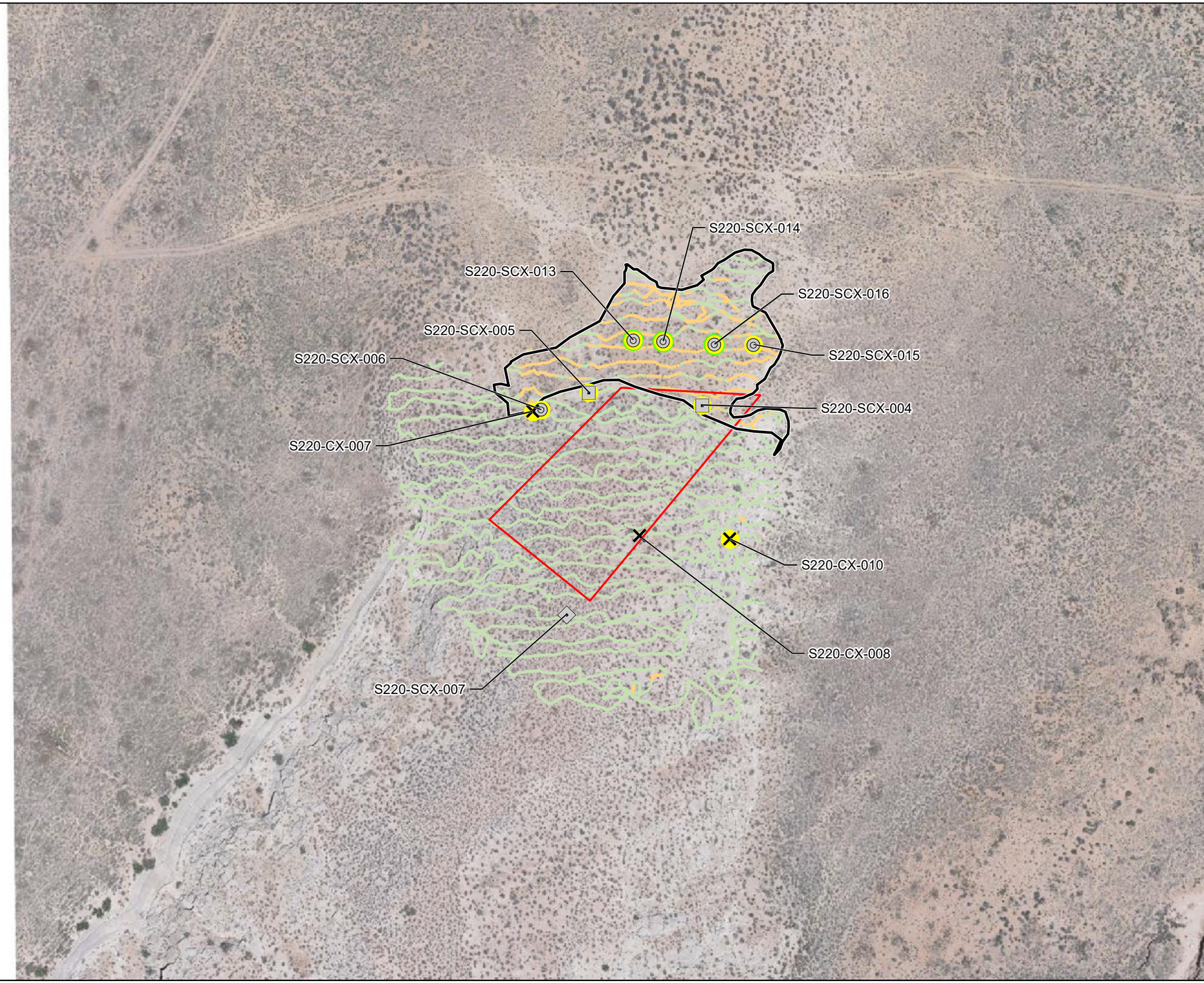

NAVAJO NATION
AUM Environmental Response Trust-First Phase

LEGEND

- Surface Sample Location
- Borehole Location - Surface and Subsurface Samples
- Borehole Location - Surface Samples Only
- Borehole Location - Subsurface Sample Only
- IL Exceedance in Unconsolidated Material at Location
- IL Exceedance in Bedrock in Borehole
- Approximate Area where Surface Gamma IL is Exceeded (0.7 acres)
- Claim Boundary

Gamma Survey

Counts per Minute (CPM)

- 5,930 - 21,576 (IL Not Exceeded)
- 21,577 - 61,743 (IL Exceeded)

REFERENCES:
Coordinate System: NAD 1983 UTM Zone 12N

Basemap image flown specifically for the project by Cooper Aerial Surveys Co. on June 16, 2017.

N W E S

0 100 200
Feet

TITLE: Survey Area A Lateral Extent of Surface and Subsurface IL Exceedances

PROJECT: Removal Site Evaluation Barton 3 Mine Site

DATE: 10/4/2018

DOCUMENT NAME: Removal Site Evaluation Report

Stantec

AUTHOR: AS

REVIEWER: CBB

FIGURE: 4-4b

Document Path: U:\233001213\03_data\gis_cad_MXDs\RSE\RSE_Barton3\Section4\RSE_Barton3_Lateral_Extent_A_11x17_L_4-4b_20181004.mxd

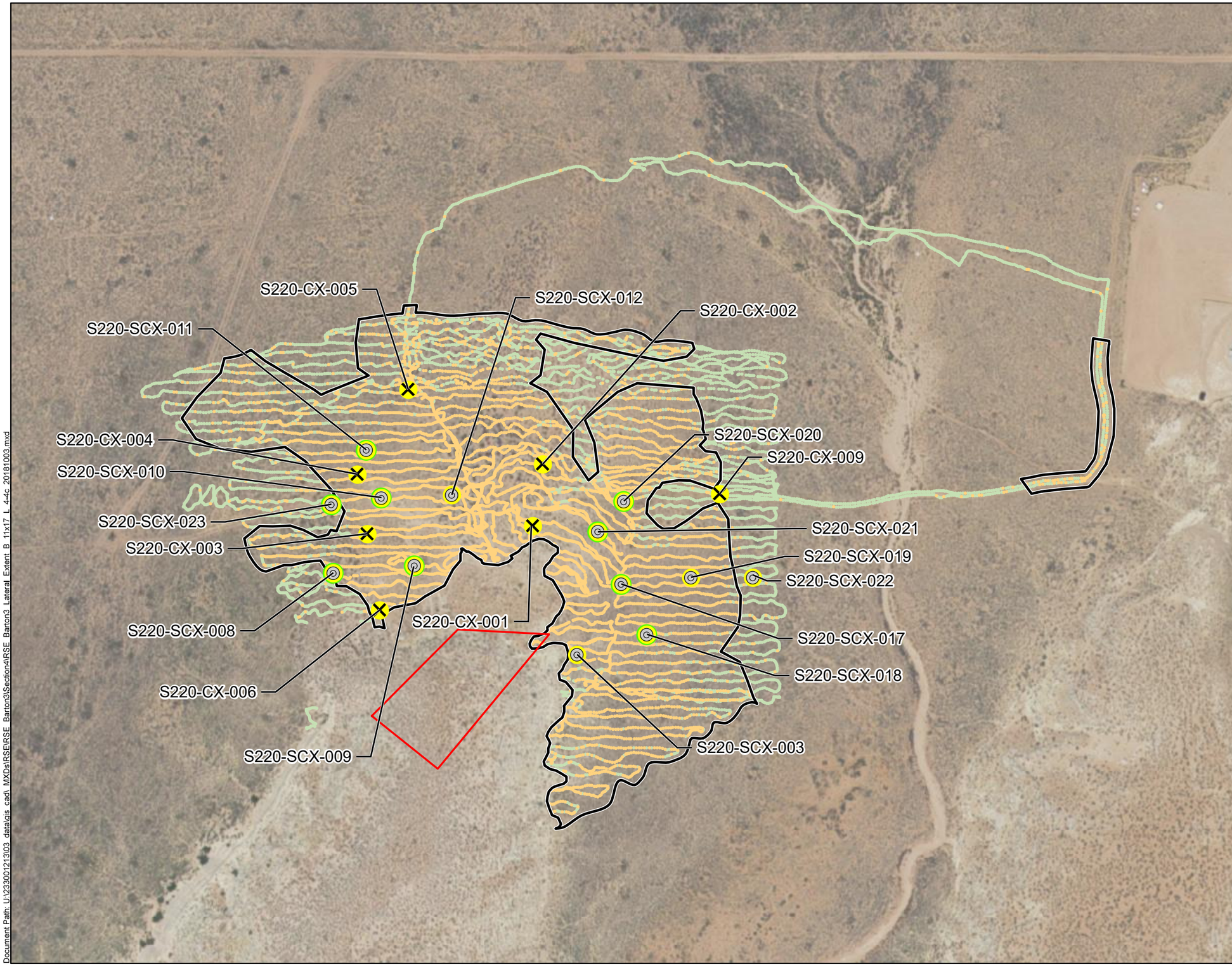

NAVAJO NATION
AUM Environmental Response Trust-First Phase

LEGEND

- Surface Sample Location
- Borehole Location - Surface and Subsurface Samples
- Approximate Area where Surface Gamma IL is Exceeded (7.7 acres)
- Claim Boundary

Gamma Survey

Counts per Minute (CPM)

- 6,536 - 10,677 (IL Not Exceeded)
- 10,678 - 54,971 (IL Exceeded)

REFERENCES:
Coordinate System: NAD 1983 UTM Zone 12N

Basemap image accessed from the National Agriculture Imagery Program (NAIP) web mapping service (https://gis.apfo.usda.gov/arcgis/services/) on 10/4/2018

N W E S

0 150 300
Feet

TITLE: Survey Area B Lateral Extent of Surface and Subsurface IL Exceedances

PROJECT: Removal Site Evaluation Barton 3 Mine Site

DATE: 10/4/2018

DOCUMENT NAME: Removal Site Evaluation Report

Stantec

AUTHOR: AS

REVIEWER: CBB

FIGURE: 4-4c

Document Path: U:\233001213\03_data\gis_cad_MXDs\RSE\RSE_Barton3\Section4\RSE_Barton3_Lateral_Extent_B_11x17_L_4-4c_20181003.mxd

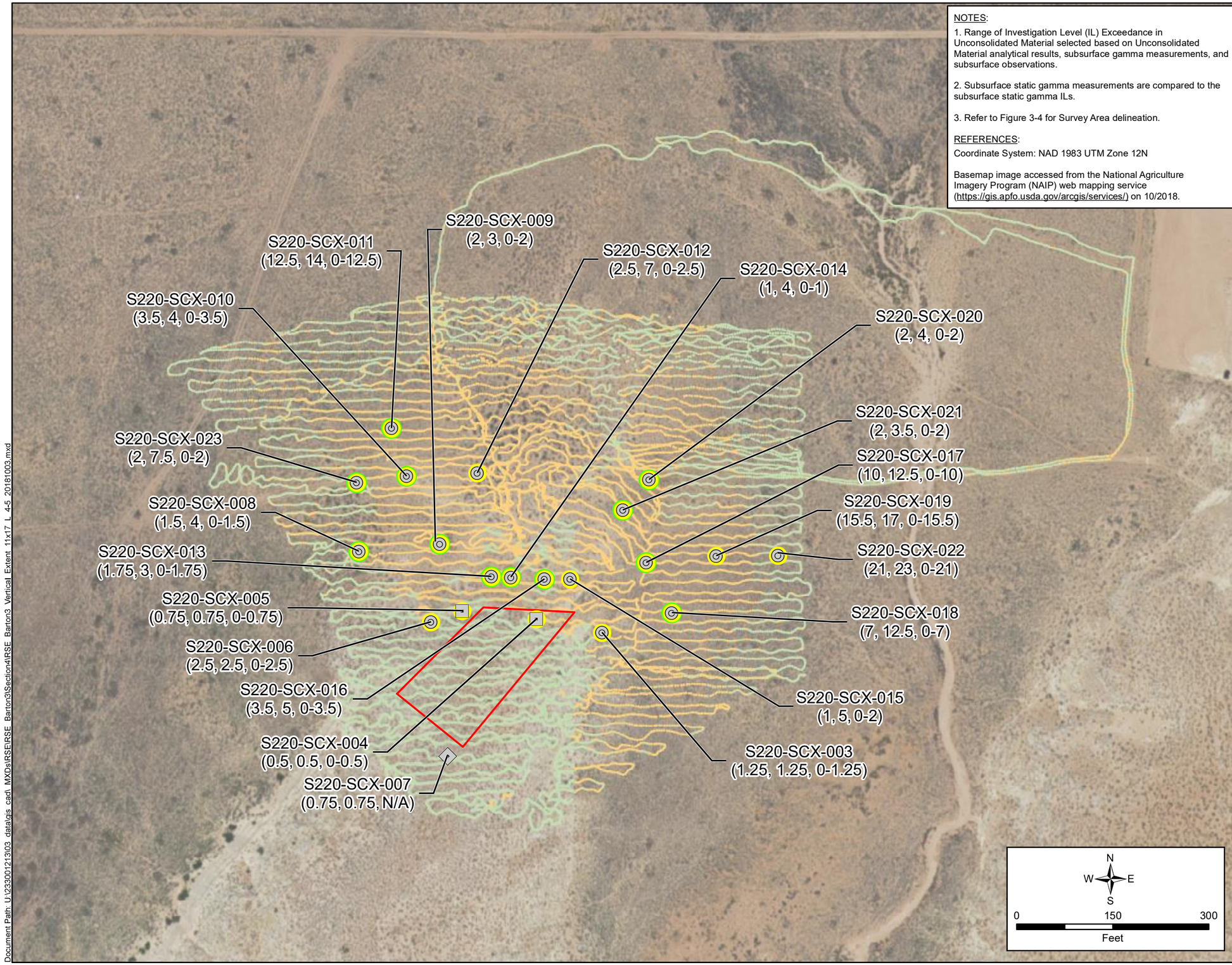

NOTES:

1. Range of Investigation Level (IL) Exceedance in Unconsolidated Material selected based on Unconsolidated Material analytical results, subsurface gamma measurements, and subsurface observations.

2. Subsurface static gamma measurements are compared to the subsurface static gamma ILs.

3. Refer to Figure 3-4 for Survey Area delineation.

REFERENCES:

Coordinate System: NAD 1983 UTM Zone 12N

Basemap image accessed from the National Agriculture Imagery Program (NAIP) web mapping service (https://gis.apfo.usda.gov/arcgis/services/) on 10/2018.

NAVAJO NATION
AUM Environmental Response Trust-First Phase

LEGEND

- Borehole Location - Surface and Subsurface Samples (Depth of Bedrock, Borehole Depth, Depth Range of IL Exceedance in Unconsolidated Material[1])
- Borehole Location - Surface Samples Only (Depth of Bedrock, Borehole Depth, Depth Range of IL Exceedance in Unconsolidated Material[1])
- Borehole Location - Subsurface Sample Only (Depth of Bedrock, Borehole Depth, Depth Range of IL Exceedance in Unconsolidated Material[1])
- IL Exceedance in Unconsolidated Material at Location
- IL Exceedance in Bedrock in Borehole
- Claim Boundary

Gamma Survey

Counts per Minute (CPM)

- IL Not Exceeded
  Survey Area A: 5,930 - 21,576
  Survey Area B: 6,536 - 10,677
- IL Exceeded
  Survey Area A: 21,577 - 61,743
  Survey Area B: 10,678 - 54,971

TITLE:
Vertical Extent of IL Exceedances in Unconsolidated Material

PROJECT:
Removal Site Evaluation
Barton 3 Mine Site

DATE: 10/18/2018

DOCUMENT NAME: Removal Site Evaluation Report

Stantec

AUTHOR: AS

REVIEWER: CBB

FIGURE: 4-5

Document Path: U:\233001213\03_data\gis_cad_MXDs\RSE\RSE_Barton3\Section4\RSE_Barton3_Vertical_Extent_11x17_L_4-5_20181003.mxd

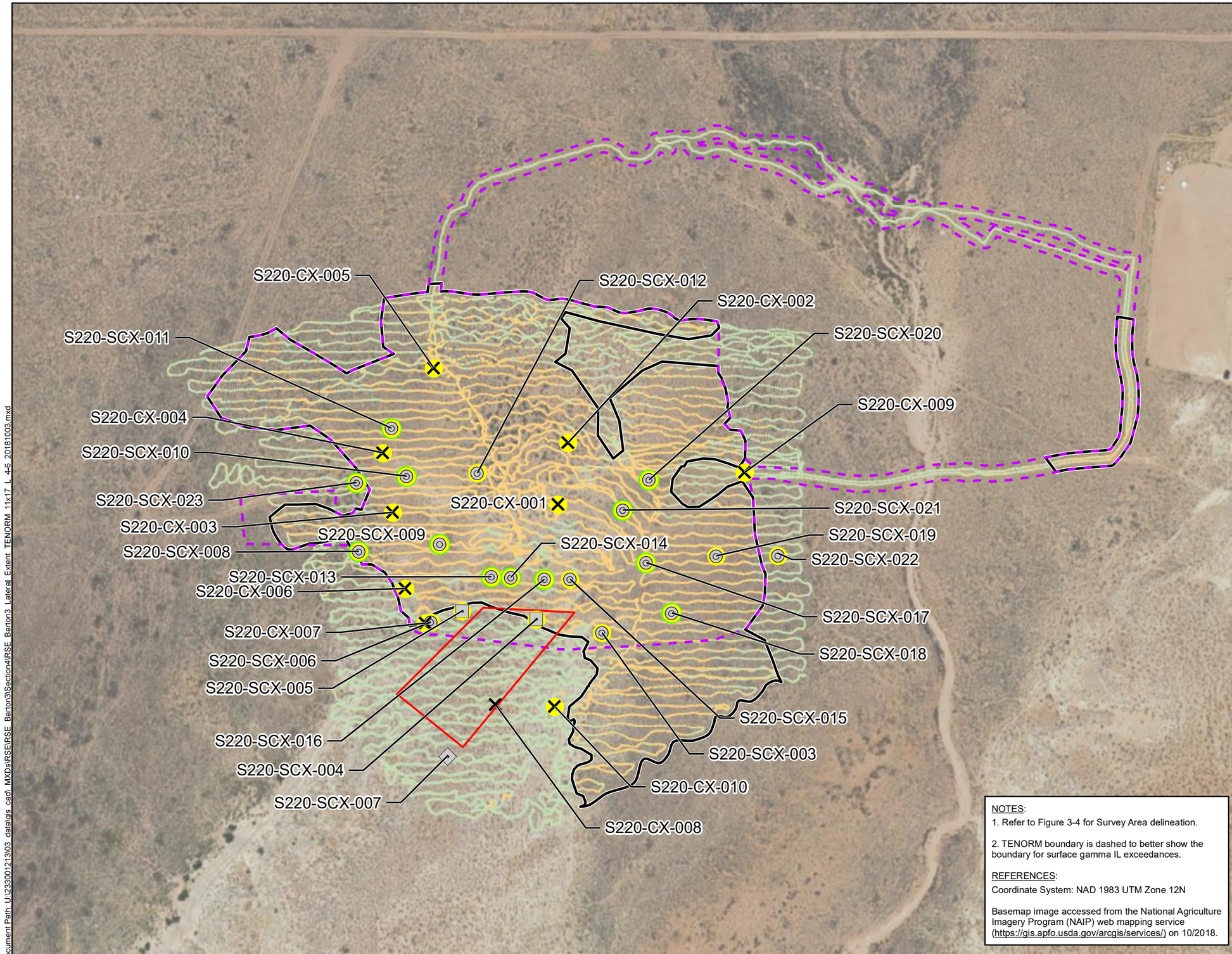

NOTES:

1. Refer to Figure 3-4 for Survey Area delineation.

2. TENORM boundary is dashed to better show the boundary for surface gamma IL exceedances.

REFERENCES:

Coordinate System: NAD 1983 UTM Zone 12N

Basemap image accessed from the National Agriculture Imagery Program (NAIP) web mapping service (https://gis.apfo.usda.gov/arcgis/services/) on 10/2018.

NAVAJO NATION
AUM Environmental Response Trust-First Phase

LEGEND

- Surface Sample Location
- Borehole Location - Surface and Subsurface Samples
- Borehole Location - Surface Samples Only
- Borehole Location - Subsurface Sample Only
- IL Exceedance in Unconsolidated Material at Location
- IL Exceedance in Bedrock in Borehole
- Approximate Area where Surface Gamma ILs are Exceeded (8.4 acres)
- TENORM (9.4 acres)
- Claim Boundary

Gamma Survey

Counts per Minute (CPM)

IL Not Exceeded
Survey Area A: 5,930 - 21,576
Survey Area B: 6,536 - 10,677

IL Exceeded
Survey Area A: 21,577 - 61,743
Survey Area B: 10,678 - 54,971

N W E S

0 150 300
Feet

TITLE:
TENORM Compared to Lateral Extent of IL Exceedances

PROJECT:
Removal Site Evaluation
Barton 3 Mine Site

DATE: 10/18/2018

DOCUMENT NAME: Removal Site Evaluation Report

Stantec

AUTHOR: AS

REVIEWER: CBB

FIGURE: 4-6

Document Path: U:\233001213\03_data\gis_cad_MXDs\RSE\RSE_Barton3\Section4\RSE_Barton3_Lateral_Extent_TENORM_11x17_L_4-6_20181003.mxd

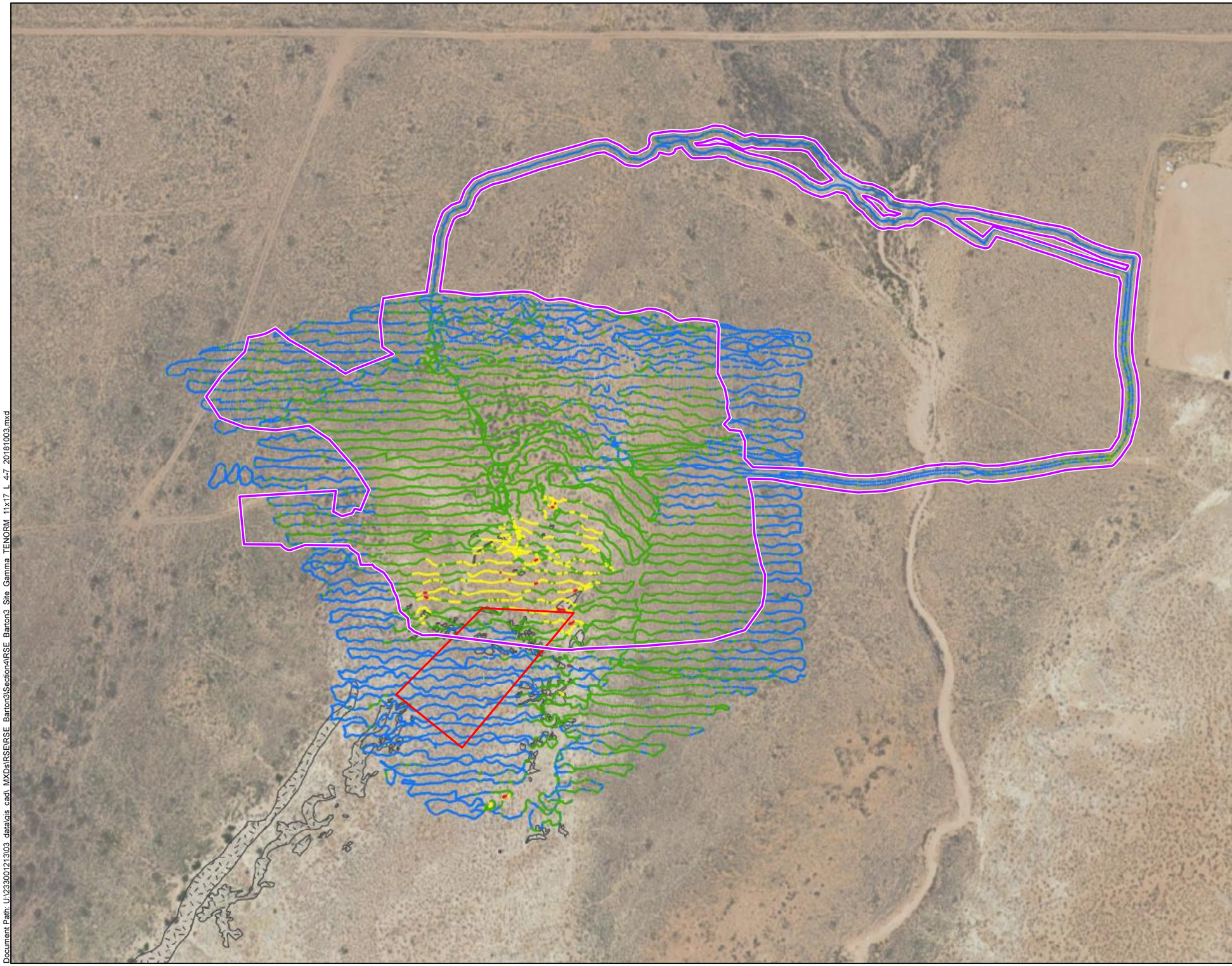

NAVAJO NATION
AUM Environmental Response Trust-First Phase

LEGEND

- TENORM (9.4 acres)
- Exposed Bedrock[1]
- Claim Boundary

Gamma Survey

Counts per Minute (CPM)

- 5,930 - 10,677 (Minimum to BG-3 IL)
- 10,678 - 21,576 (>BG-3 IL to BG-1 IL)
- 21,577 - 43,152 (>BG-1 IL to 2x BG-3 IL)
- 43,153 - 61,743 (>2x BG-3 IL to Maximum)

NOTE:
1. Portions of the areas delineated as exposed bedrock contain small amounts of colluvium.

REFERENCES:
Coordinate System: NAD 1983 UTM Zone 12N

Basemap image accessed from the National Agriculture Imagery Program (NAIP) web mapping service (https://gis.apfo.usda.gov/arcgis/services/) on 10/2018.

N
W E
S

0 150 300
Feet

TITLE:
TENORM Compared to Gamma Radiation Survey Results

PROJECT:
Removal Site Evaluation
Barton 3 Mine Site

DATE:	DOCUMENT NAME:	
10/18/2018	Removal Site Evaluation Report	
Stantec	AUTHOR: AS	REVIEWER: CBB
	FIGURE: 4-7	

Document Path: U:\233001213\03_data\gis_cad_MXDs\RSE\RSE_Barton3\Section4\RSE_Barton3_Site_Gamma_TENORM_11x17_L_4-7_20181003.mxd

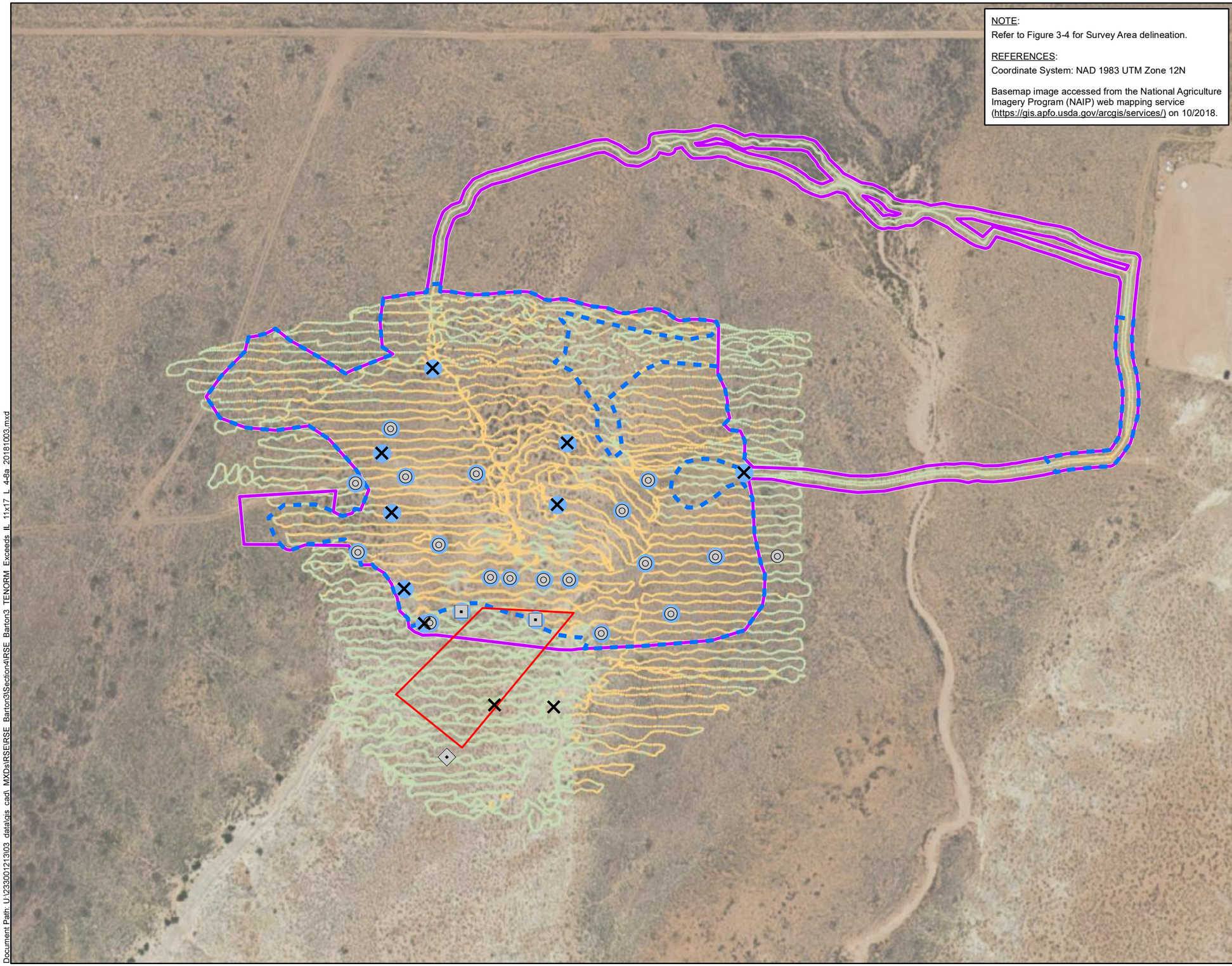

NOTE:
Refer to Figure 3-4 for Survey Area delineation.

REFERENCES:
Coordinate System: NAD 1983 UTM Zone 12N

Basemap image accessed from the National Agriculture Imagery Program (NAIP) web mapping service (https://gis.apfo.usda.gov/arcgis/services/) on 10/2018.

NAVAJO NATION
AUM Environmental Response Trust-First Phase

LEGEND

- Surface Sample Location
- Borehole Location - Surface and Subsurface Samples
- Borehole Location - Surface Samples Only
- Borehole Location - Subsurface Sample Only
- TENORM Exceeding IL in Unconsolidated Material at Location
- TENORM Area Exceeding Surface Gamma ILs (7.2 acres)
- TENORM (9.4 acres)
- Claim Boundary

Gamma Survey

Counts per Minute (CPM)

IL Not Exceeded
Survey Area A: 5,930 - 21,576
Survey Area B: 6,536 - 10,677

IL Exceeded
Survey Area A: 21,577 - 61,743
Survey Area B: 10,678 - 54,971

N
W E
S

0 150 300
Feet

TITLE:
TENORM that Exceed ILs

PROJECT:
Removal Site Evaluation
Barton 3 Mine Site

DATE: 10/4/2018

DOCUMENT NAME: Removal Site Evaluation Report

Stantec

AUTHOR: AS
REVIEWER: CBB

FIGURE: 4-8a

Document Path: U:\233001213\03_data\gis_cad_MXDs\RSE\RSE_Barton3\Section4\RSE_Barton3_TENORM_Exceeds_IL_11x17_L_4-8a_20181003.mxd

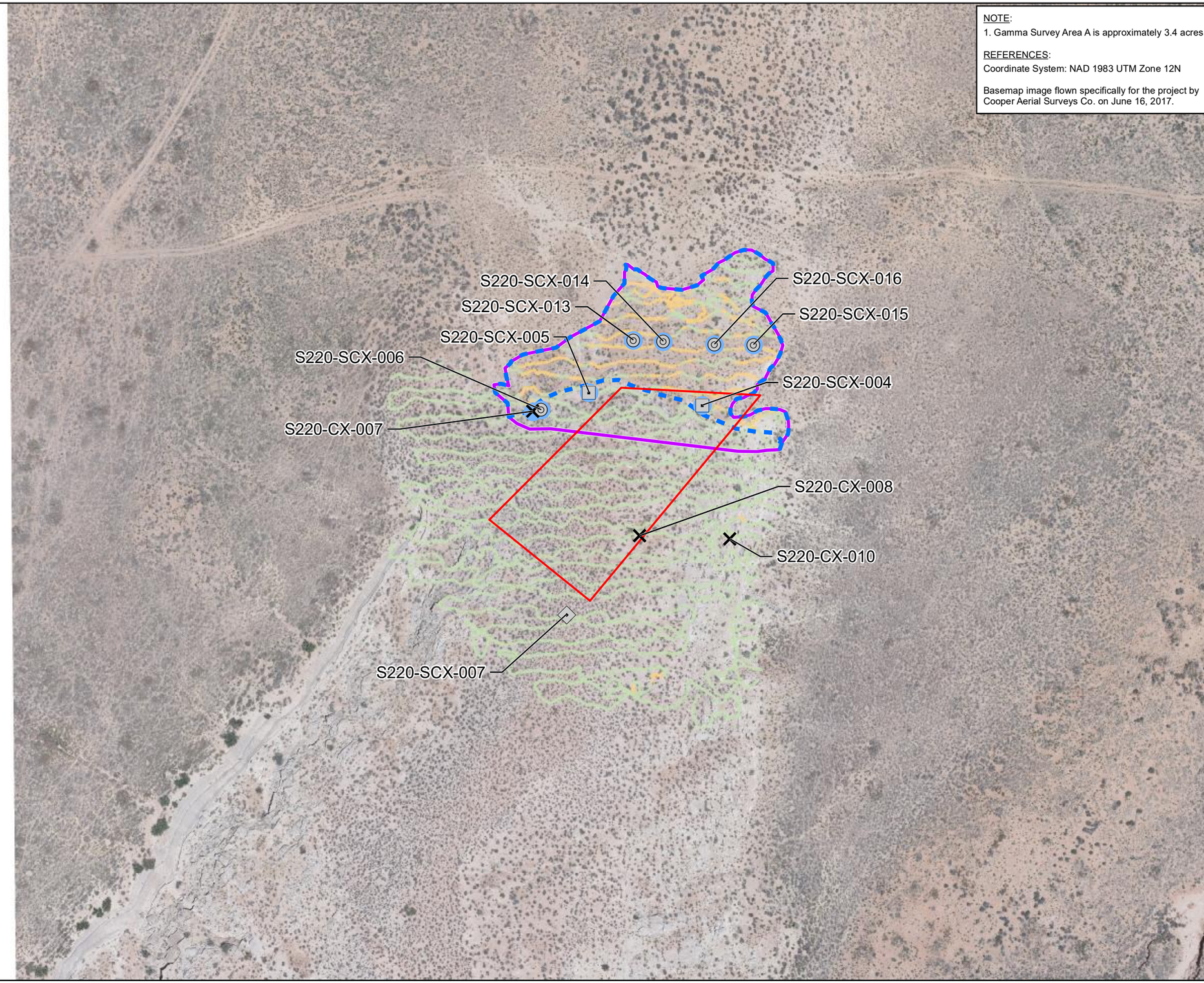

NOTE:
1. Gamma Survey Area A is approximately 3.4 acres

REFERENCES:
Coordinate System: NAD 1983 UTM Zone 12N

Basemap image flown specifically for the project by Cooper Aerial Surveys Co. on June 16, 2017.

NAVAJO NATION
AUM Environmental Response Trust-First Phase

LEGEND

- Surface Sample Location
- Borehole Location - Surface and Subsurface Samples
- Borehole Location - Surface Samples Only
- Borehole Location - Subsurface Sample Only
- TENORM Exceeding IL in Unconsolidated Material at Location
- TENORM Area Exceeding Surface Gamma ILs (0.7 acres)
- TENORM (0.9 acres)
- Claim Boundary

Gamma Survey[1]

Counts per Minute (CPM)

- 5,930 - 21,576 (IL Not Exceeded)
- 21,577 - 61,743 (IL Exceeded)

N W E S

0 100 200
Feet

TITLE:
Survey Area A
TENORM that Exceed ILs

PROJECT:
Removal Site Evaluation
Barton 3 Mine Site

DATE: 10/3/2018

DOCUMENT NAME: Removal Site Evaluation Report

Stantec

AUTHOR: AS
REVIEWER: CBB

FIGURE: 4-8b

Document Path: U:\233001213\03_data\gis_cad_MXDs\RSE\RSE_Barton3\Section4\RSE_Barton3_TENORM_Exceeds_IL_A_11x17_L_4-8b_20181003.mxd

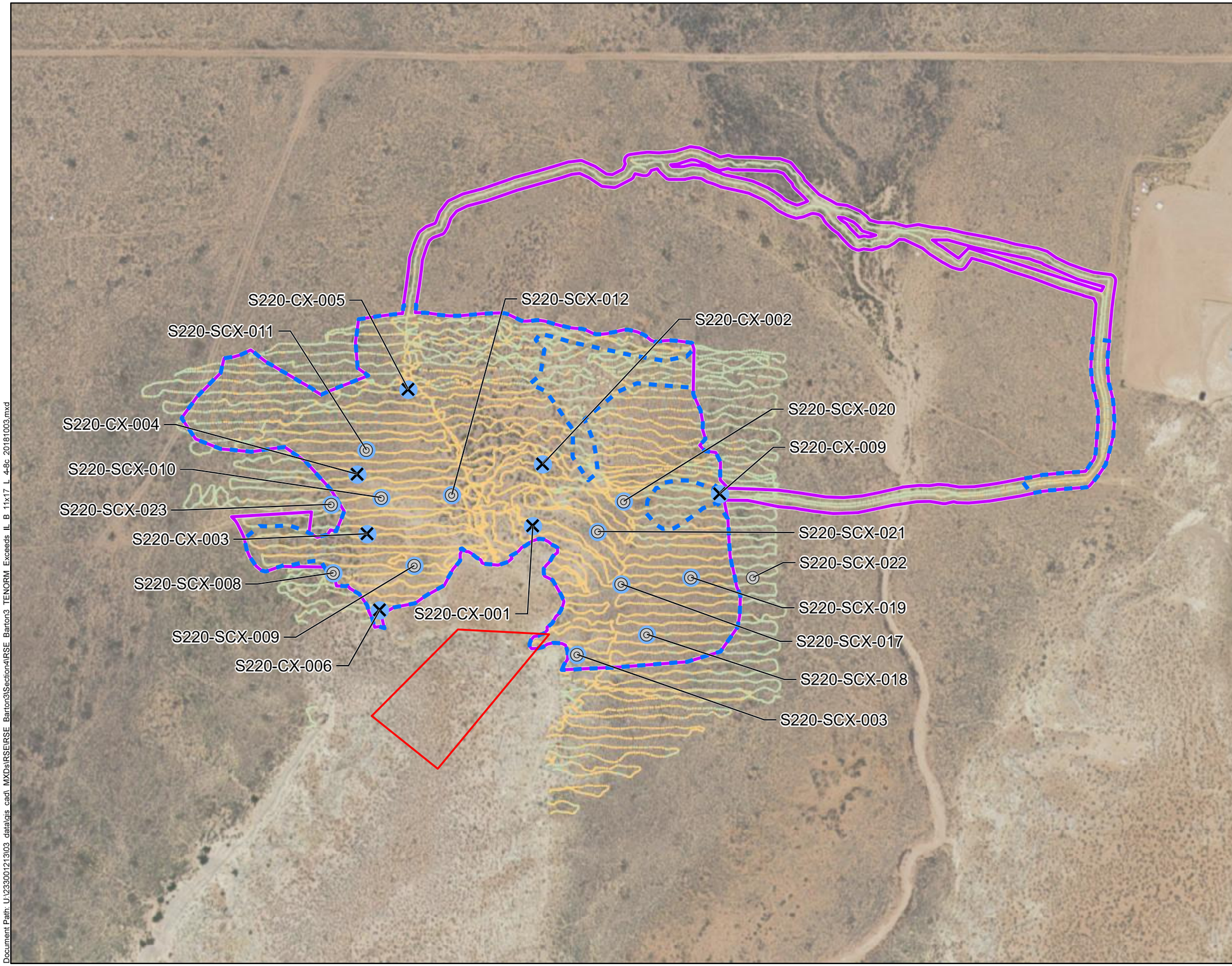

NAVAJO NATION
AUM Environmental Response Trust-First Phase

LEGEND

- Surface Sample Location
- Borehole Location - Surface and Subsurface Samples
- TENORM Exceeding IL in Unconsolidated Material at Location
- TENORM Area Exceeding Surface Gamma ILs (6.5 acres)
- TENORM (8.5 acres)
- Claim Boundary

Gamma Survey[1]

Counts per Minute (CPM)

- 6,536 - 10,677 (IL Not Exceeded)
- 10,678 - 54,971 (IL Exceeded)

NOTE:
1. Gamma Survey Area B is approximately 12.0 acres

REFERENCES:
Coordinate System: NAD 1983 UTM Zone 12N

Basemap image accessed from the National Agriculture Imagery Program (NAIP) web mapping service (https://gis.apfo.usda.gov/arcgis/services/) on 10/4/2018

N W E S

0 150 300
Feet

TITLE:
Survey Area B
TENORM that Exceed ILs

PROJECT:
Removal Site Evaluation
Barton 3 Mine Site

DATE: 10/4/2018

DOCUMENT NAME: Removal Site Evaluation Report

Stantec

AUTHOR: AS
REVIEWER: CCB

FIGURE: 4-8c

Document Path: U:\233001213\03_data\gis_cad_MXDs\RSE\RSE_Barton3\Section4\RSE_Barton3_TENORM_Exceeds_IL_B_11x17_L_4-8c_20181003.mxd

NOTE:
Refer to Figure 3-4 for Survey Area delineation.

REFERENCES:
Coordinate System: NAD 1983 UTM Zone 12N

Basemap image accessed from the National Agriculture Imagery Program (NAIP) web mapping service (https://gis.apfo.usda.gov/arcgis/services/) on 10/2018.

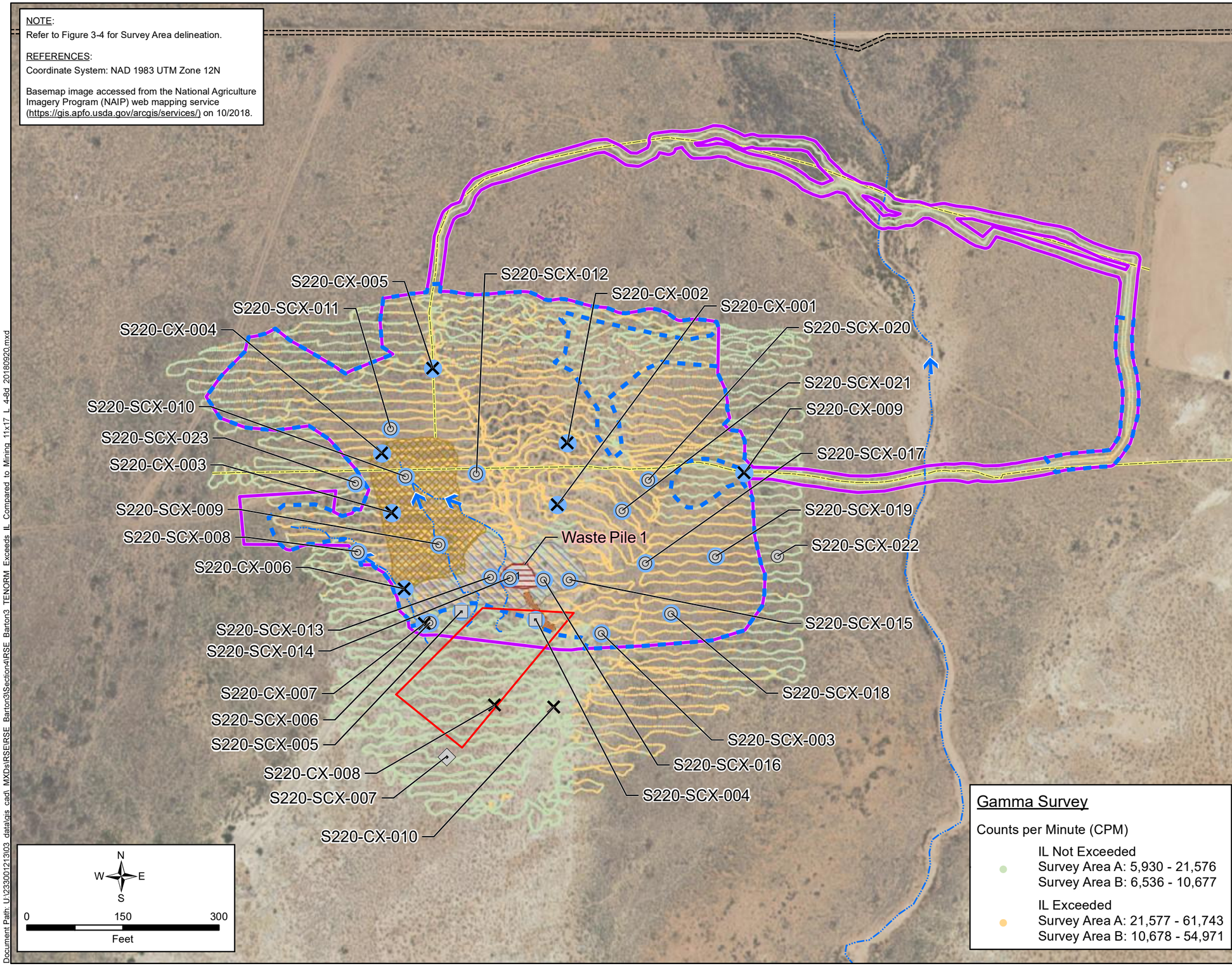

NAVAJO NATION
AUM Environmental Response Trust-First Phase

LEGEND

- Surface Sample Location
- Borehole Location - Surface and Subsurface Samples
- Borehole Location - Surface Samples Only
- Borehole Location - Subsurface Sample Only
- TENORM Exceeding IL in Unconsolidated Material at Location
- Flow Direction
- Drainage
- Potential Haul Road
- Road
- Berm
- Waste Pile
- Excavation
- Graded / Disturbed Reclaimed Area
- TENORM Area Exceeding Surface Gamma ILs (7.2 acres)
- TENORM (9.4 acres)
- Claim Boundary

Gamma Survey

Counts per Minute (CPM)

IL Not Exceeded
Survey Area A: 5,930 - 21,576
Survey Area B: 6,536 - 10,677

IL Exceeded
Survey Area A: 21,577 - 61,743
Survey Area B: 10,678 - 54,971

TITLE:
TENORM that Exceed ILs Compared to Mining-Related Features

PROJECT:
Removal Site Evaluation
Barton 3 Mine Site

DATE: 10/4/2018

DOCUMENT NAME: Removal Site Evaluation Report

AUTHOR: AS

REVIEWER: CBB

Stantec

FIGURE: 4-8d

Document Path: U:\233001213\03_data\gis_cad_MXDs\RSE\RSE_Barton3\Section4\RSE_Barton3_TENORM_Exceeds_IL_Compared_to_Mining_11x17_L_4-8d_20180920.mxd

Estimated Depth and Volume of TENORM Exceeding IL																			
Estimate Type	Group 1			Group 2			Group 3			Group 4			Group 5			Group 6			Total Volume
	Depth	Area	Volume	Depth	Area	Volume	Depth	Area	Volume	Depth	Area	Volume	Depth	Area	Volume	Depth	Area	Volume	
Conservative	1	86,487	3,203	10	21,321	7,897	2	133,268	9,872	1	27,962	1,036	10	44,431	16,456	1	7,817	145	38,609
Assumed	1	86,487	3,203	2	21,321	1,579	2	133,268	9,872	1	27,962	1,036	2	44,431	3,291	1	7,817	145	19,126

1 Depth in feet below ground surface

2 Area in square feet

3 Volume in cubic yards

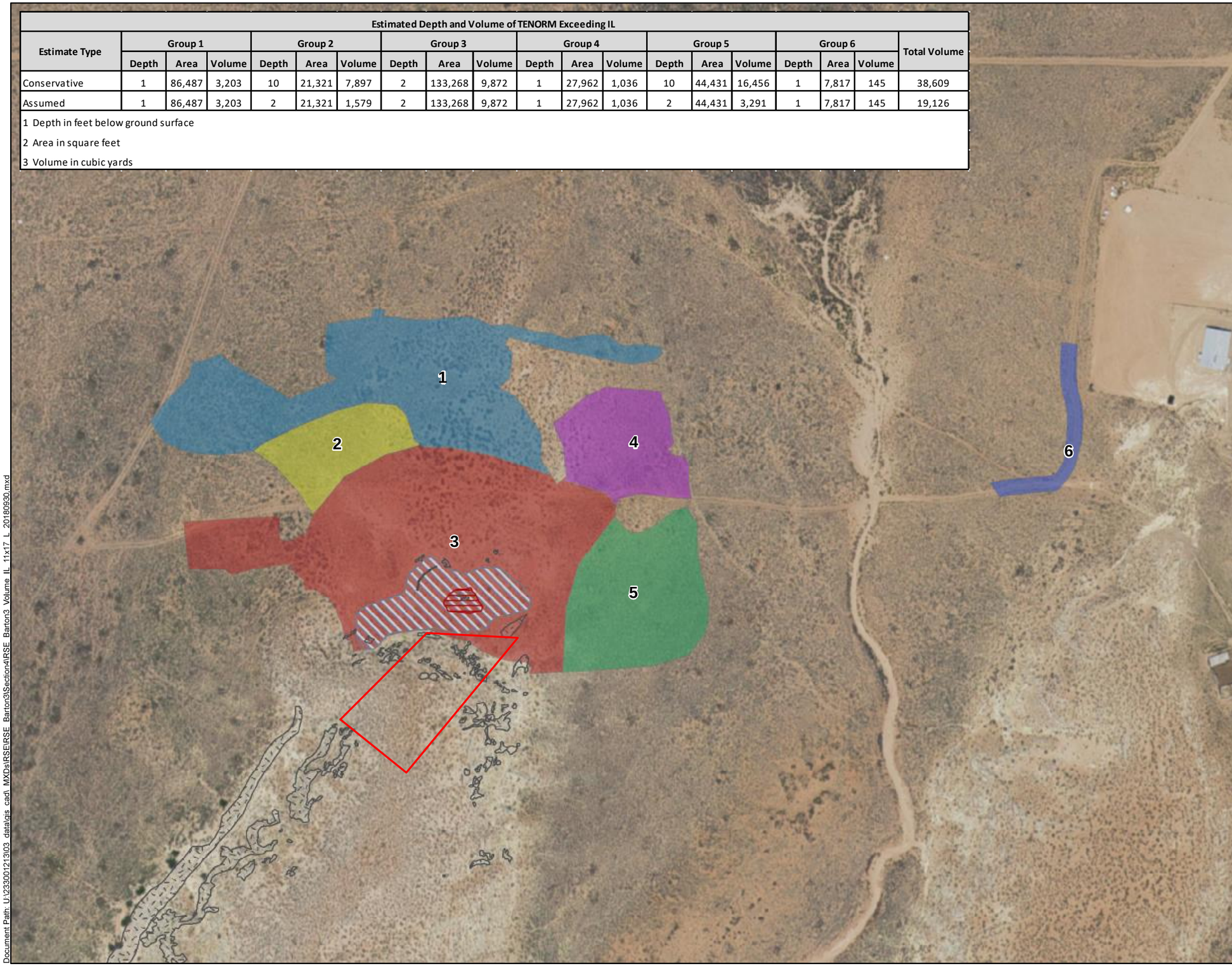

NAVAJO NATION
AUM Environmental Response Trust-First Phase

LEGEND

- Exposed Bedrock[1]
- Graded / Disturbed Reclaimed Area
- Waste Pile

Average TENORM Depth by Group (feet below ground surface)

- Group 1
- Group 2
- Group 3
- Group 4
- Group 5
- Group 6
- Claim Boundary

NOTE:
1. Portions of the areas delineated as exposed bedrock contain small amounts of colluvium.

REFERENCES:
Coordinate System: NAD 1983 UTM Zone 12N

Basemap image accessed from the National Agriculture Imagery Program (NAIP) web mapping service (https://gis.apfo.usda.gov/arcgis/services/) on 10/2018.

N W E S

0 150 300
Feet

TITLE:
Volume Estimate of TENORM that Exceeds ILs

PROJECT:
Removal Site Evaluation
Barton 3 Mine Site

DATE: 10/8/2018

DOCUMENT NAME: Removal Site Evaluation Report

Stantec

AUTHOR: AS

REVIEWER: CBB

FIGURE: 4-9a

Document Path: U:\233001213\03_data\gis_cad_MXDs\RSE\RSE_Barton3\Section4\RSE_Barton3_Volume_IL_11x17_L_20180930.mxd

Estimated Depth and Volume of TENORM Exceeding IL																			
Estimate Type	Group 1			Group 2			Group 3			Group 4			Group 5			Group 6			Total Volume
	Depth	Area	Volume	Depth	Area	Volume	Depth	Area	Volume	Depth	Area	Volume	Depth	Area	Volume	Depth	Area	Volume	
Conservative	1	86,487	3,203	10	21,321	7,897	2	133,268	9,872	1	27,962	1,036	10	44,431	16,456	1	7,817	145	38,609
Assumed	1	86,487	3,203	2	21,321	1,579	2	133,268	9,872	1	27,962	1,036	2	44,431	3,291	1	7,817	145	19,126

1 Depth in feet below ground surface

2 Area in square feet

3 Volume in cubic yards

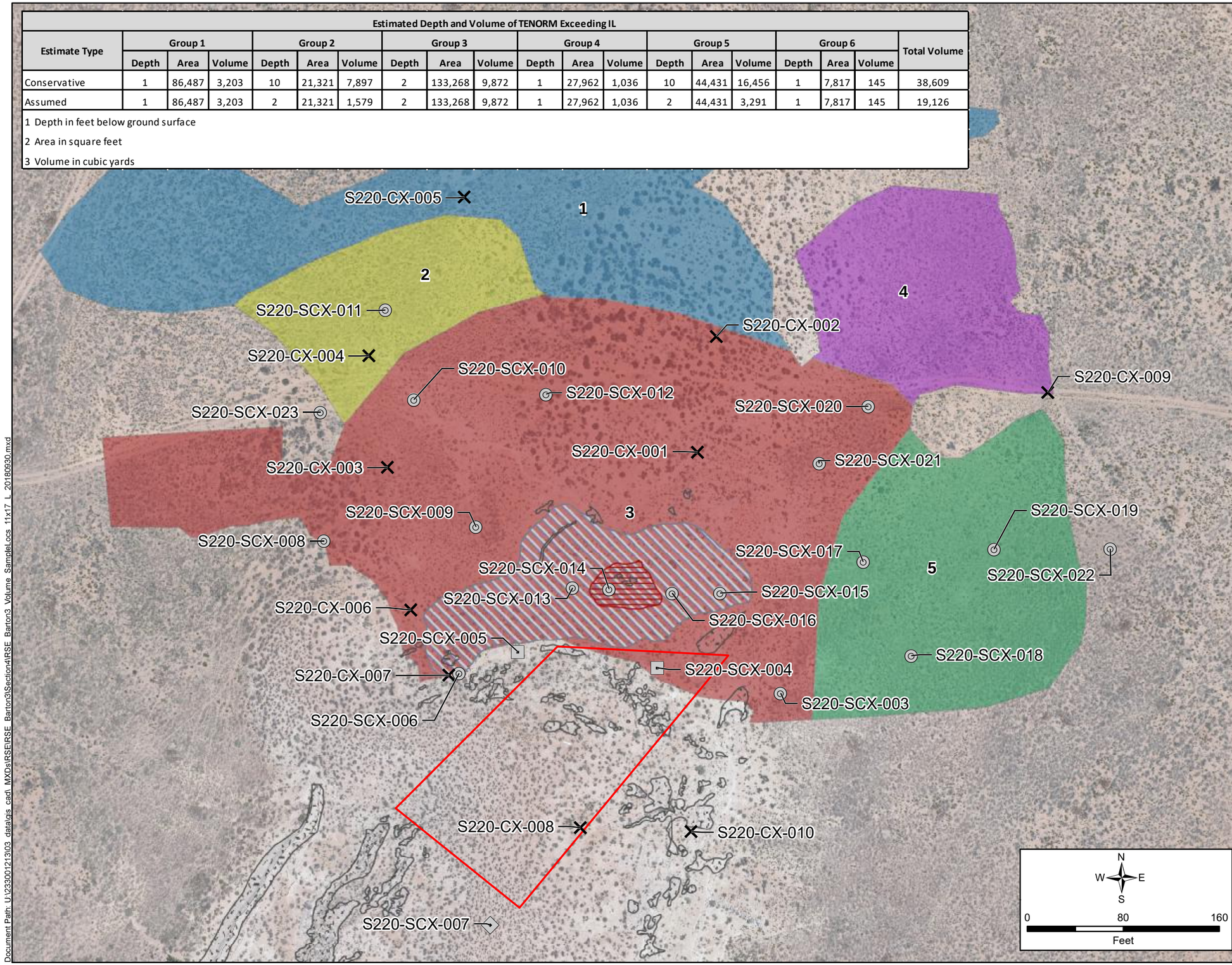

NAVAJO NATION
AUM Environmental Response Trust-First Phase

LEGEND

- Surface Sample Location
- Borehole Location - Surface and Subsurface Samples
- Borehole Location - Surface Samples Only
- Borehole Location - Subsurface Sample Only
- Exposed Bedrock[1]
- Graded / Disturbed Reclaimed Area
- Waste Pile

Average TENORM Depth by Group (feet below ground surface)

- Group 1
- Group 2
- Group 3
- Group 4
- Group 5
- Group 6
- Claim Boundary

NOTE:
1. Portions of the areas delineated as exposed bedrock contain small amounts of colluvium.

REFERENCES:
Coordinate System: NAD 1983 UTM Zone 12N

Basemap image flown by Cooper Aerial Surveys Co. on June 16, 2017.

TITLE:
Sample Locations and TENORM that Exceeds ILs

PROJECT:
Removal Site Evaluation
Barton 3 Mine Site

DATE: 10/8/2018

DOCUMENT NAME: Removal Site Evaluation Report

AUTHOR: AS

REVIEWER: CBB

Stantec

FIGURE: 4-9b

Document Path: U:\233001213\03_data\gis_cad_MXDs\RSE\RSE_Barton3\Section4\RSE_Barton3_Volume_SampleLocs_11x17_L_20180930.mxd

APPENDICES

Appendix A Radiological Characterization of the Barton 3 Abandoned Uranium Mine

Radiological Characterization of the Barton 3 Abandoned Uranium Mine

September 20, 2018

prepared for:

Stantec Consulting Services Inc.

2130 Resort Drive, Suite 350
Steamboat Springs, CO 80487

prepared by:

Environmental Restoration Group, Inc.

8809 Washington St. NE
Suite 150
Albuquerque, NM 87113

Contents

Executive Summary iv

1.0 Introduction 1

2.0 GPS-Based Gamma Surveys 2

2.1 Potential Background Reference Areas 4

2.2 Survey Area 7

3.0 Correlation Studies 10

3.1 Radium-226 concentrations in surface soils and gamma count rates 10

3.2 Equilibrium in the uranium series 14

3.3 Exposure rates and gamma count rates 18

4.0 Deviations to RSE Work Plan 22

5.0 Conclusions 22

6.0 References 23

Tables

Table 1 Detection systems used in the GPS-based gamma surveys

Table 2 Summary statistics for gamma count rates in the potential Background Reference Areas

Table 3 Summary statistics for gamma count rates in the Survey Area

Table 4 Gamma count rates and associated concentrations of radium-226 in samples of surface soils obtained in the correlation study

Table 5 Concentrations of isotopes of thorium in samples of surface soils obtained in the correlation study

Table 6 Predicted concentrations of radium-226 in the Survey Area

Table 7 Co-located gamma count rate and exposure rate measurements

Table 8 Predicted exposure rates in the potential Background Reference Areas

Table 9 Predicted exposure rates in the Survey Area

Figures

Figure 1 Location of the Barton 3 Abandoned Uranium Mine

Figure 2 Gamma count rates in the potential Background Reference Areas

Figure 3 Histogram of gamma count rates in the potential Background Reference Areas

Figure 4 Gamma count rates in the Survey Area

Figure 5 Histogram of gamma count rates in the Survey Area

Figure 6 Box plot of gamma count rates in the Survey Area

Figure 7 GPS-based gamma count rate measurements made for the correlation study

Figure 8 Correlation of gamma count rates and concentrations of radium-226 in surface soils

Figure 9 Predicted concentrations of radium-226 in the Survey Area

Figure 10 Evaluation of secular equilibrium in the uranium decay series

Figure 11 Correlation of gamma count rates and exposure rates

Figure 12 Predicted exposure rates in the Survey Area

Appendices

Appendix A Instrument calibration and completed function check forms

Appendix B Exposure Rate Measurements

Appendix C Technical Memo from ERG to Stantec. "Statistical Analysis of the Navajo Trustee Mines Dataset: Multivariate Linear Regression for Evaluation of Gamma Correlation with Ra-226 and Evaluation of Secular Equilibrium Between Ra-226 and Th-230".

Appendix D Preliminary Report "Radiological Characterization of Barton 3 Abandoned Uranium Mine"

Acronyms

ANSI	American National Standards Institute
AUM	abandoned uranium mine
BG1	Background Reference Area 1
BG2	Background Reference Area 2
BG3	Background Reference Area 3
cpm	counts per minute
DQOs	data quality objectives
EPA	U.S. Environmental Protection Agency
ERG	Environmental Restoration Group, Inc.
ft	foot
GPS	global positioning system
MDC	minimum detectable concentration
µR/h	microRoentgens per hour
pCi/g	picocuries per gram
R^2	Pearson's Correlation Coefficient
RSE	removal site evaluation
σ	standard deviation
Stantec	Stantec Consulting Services Inc.

Executive Summary

This report addresses the radiological characterization of the Barton 3 abandoned uranium mine (AUM) located in the Red Mesa Chapter of the Navajo Nation near Red Mesa, Arizona. It documents part of the implementation of the Navajo Nation AUM Environmental Response Trust, First Phase, Removal Site Evaluation Work Plan (RSE Work Plan: MWH, 2016). The work was performed by Environmental Restoration Group, Inc. (ERG) of Albuquerque, New Mexico and Stantec Consulting Services Inc. (Stantec) on behalf of the Navajo Nation AUM Environmental Response Trust – First Phase.

This report provides 1) the results of a Global Positioning System (GPS)-based gamma radiation (gamma) survey, 2) comparisons of the gamma count rates at this AUM to exposure rates and concentrations of radium-226 in surface soils, and 3) an assessment of equilibrium in the uranium series. The field activities addressed in this report were conducted on April 7 and October 3, 12, and 14, 2016; and April 17, June 7, and September 12 and 13, 2017. They included a GPS-based radiological survey of land surfaces over a Survey Area consisting of the mine claim area out to a 100-foot (ft) buffer, roads and drainages within a 0.25-mile radius of the 100-ft buffer, areas where the survey was extended; and correlation studies.

The discussion of the results of soil sampling in this report is limited to concentrations of radium-226 and isotopes of thorium in samples taken from surface soils, as part of correlation studies. The objective of the analysis of thorium isotopes was to 1) assess the potential effects of thorium-232 and thorium-228 on the correlation of gamma count rates to concentrations of radium-226 in surface soils; and 2) evaluate thorium-230 and radium-226 activities to indicate the status of equilibrium in the uranium decay series. These and additional results for the RSE are addressed in the "Barton 3 Removal Site Evaluation Report" (Stantec, 2018).

The findings of the RSE pertaining to these activities are:

- The horizontal extent and magnitude of mining-related materials were delineated sufficiently to support additional characterization of the subsurface.
- Elevated count rates were observed largely on naturally occurring rock outcrops situated north of the mine claim.
- Three potential Background Reference Areas were established.
- The mean relationship between gamma count rates and concentrations of radium-226 in surface soils (0 to 0.5 ft below ground surface) is described by a linear regression model:

$$\text{Gamma Count Rate (cpm)} = 2499 \times [\text{radium-226 (pCi/g)}] + 4918$$

- The distribution of concentrations of radium-226 in surface soils predicted using this model is rightward tailed. The values in the Survey Area range from 0.4 to 22.7 pCi/g, with a central tendency (median) of 2.3 pCi/g.

- The thorium series radionuclides do not appear to affect the prediction of concentrations of radium-226 from gamma count rates.

- There is evidence that thorium-230 and radium-226 are in equilibrium, but not secular equilibrium.

- The relationship between gamma count rates and exposure rates is described by a linear regression model:

  Exposure Rate (microRoentgens per hour [µR/h]) = Gamma Count Rate (cpm) x 5×10^{-4} + 6.4064

- The distribution of exposure rates predicted using this model is rightward tailed. The values in the Survey Area range from 9.4 to 37.3, with a central tendency (median) of 11.8 µR/h.

1.0 Introduction

This report addresses the radiological characterization of the Barton 3 abandoned uranium mine (AUM) located in the Red Mesa Chapter of the Navajo Nation near Red Mesa, Arizona. It documents part of the implementation of the Navajo Nation AUM Environmental Response Trust, First Phase, Removal Site Evaluation Work Plan (RSE Work Plan: MWH, 2016). The work was performed by Environmental Restoration Group, Inc. (ERG) of Albuquerque, New Mexico and Stantec Consulting Services Inc. (Stantec) on behalf of the Navajo Nation AUM Environmental Response Trust – First Phase.

The activities described here focus on the characterization of gamma radiation (gamma) emitted by uranium series radionuclides in surface soils at the AUM. This report provides 1) the results of a Global Positioning System (GPS)-based gamma radiation (gamma) survey, 2) comparisons of the gamma count rates at this AUM to exposure rates and concentrations of radium-226 in surface soils, and 3) an assessment of equilibrium in the uranium series. The objective of the correlation between field gamma count rate and surface soil concentrations of radium-226 was to use field instrumentation to predict surface soil concentrations of radium-226. The objective of the correlation between field gamma count rate and exposure rate was to use field instrumentation to predict exposure rates.

The field activities addressed in this report were conducted on April 7 and October 3, 12, and 14, 2016; and April 17, June 7, and September 12 and 13, 2017. They included a GPS-based radiological survey of land surfaces over an approximately 15.4-acre Survey Area consisting of the mine claim area out to a 100-foot (ft) buffer, roads and drainages within a 0.25-mile radius of the 100-ft buffer, and areas where the survey was extended; and correlation studies. Section 3.0 of the RSE Work Plan provides the data quality objectives (DQOs) for the project.

The discussion of the results of soil sampling in this report is limited to concentrations of radium-226 and isotopes of thorium in samples taken from surface soils, as part of correlation studies. The objective of the analysis of thorium isotopes was to 1) assess the potential effects of thorium-232 and thorium-228 on the correlation of gamma count rates to concentrations of radium-226 in surface soils; and 2) evaluate thorium-230 and radium-226 activities to indicate the status of equilibrium in the uranium decay series. These and additional results for the RSE are addressed in the “Barton 3 Removal Site Evaluation Report” (Stantec, 2018).

Figure 1 shows the location of the AUM. Background information that is pertinent to the characterization of this AUM is presented in the “Barton 3 Removal Site Evaluation Report” (Stantec, 2018).

2.0 GPS-Based Gamma Surveys

This section addresses the GPS-based surveys conducted in three potential Background Reference Areas and the Survey Area. The survey was extended to bound areas in which elevated count rates were observed. Table 1 lists the detection systems used in the survey. Pursuant to the approved RSE Work Plan, detectors were function checked each day to ensure the instruments were stable to the limits prescribed by the Work Plan. Detector normalization was not performed as it was not addressed by the RSE Work Plan. Appendix A presents the completed function check forms and calibration certificates for the instruments. Standard operating procedures (SOPs) are discussed in Section 4.2 of the RSE Work Plan and are provided in Appendix E therein. ERG followed the quality assurance and control requirements stipulated in the approved Work Plan.

The 2x2 sodium iodide (NaI) detectors used in this investigation are sensitive to sub-surface radium-226 decay products and other gamma emitting radionuclides. The purpose of the gamma correlation was to estimate radium-226 concentrations in the upper 15 cm of soil. ERG selected correlation plots based on the range of gamma radiation levels observed. If subsurface soil concentrations of gamma emitting radionuclides were variable between correlation locations, this variability would be included in the regression model, and if the magnitude of the effect were sufficiently large, it would result in failure of the DQOs related to the regression analysis.

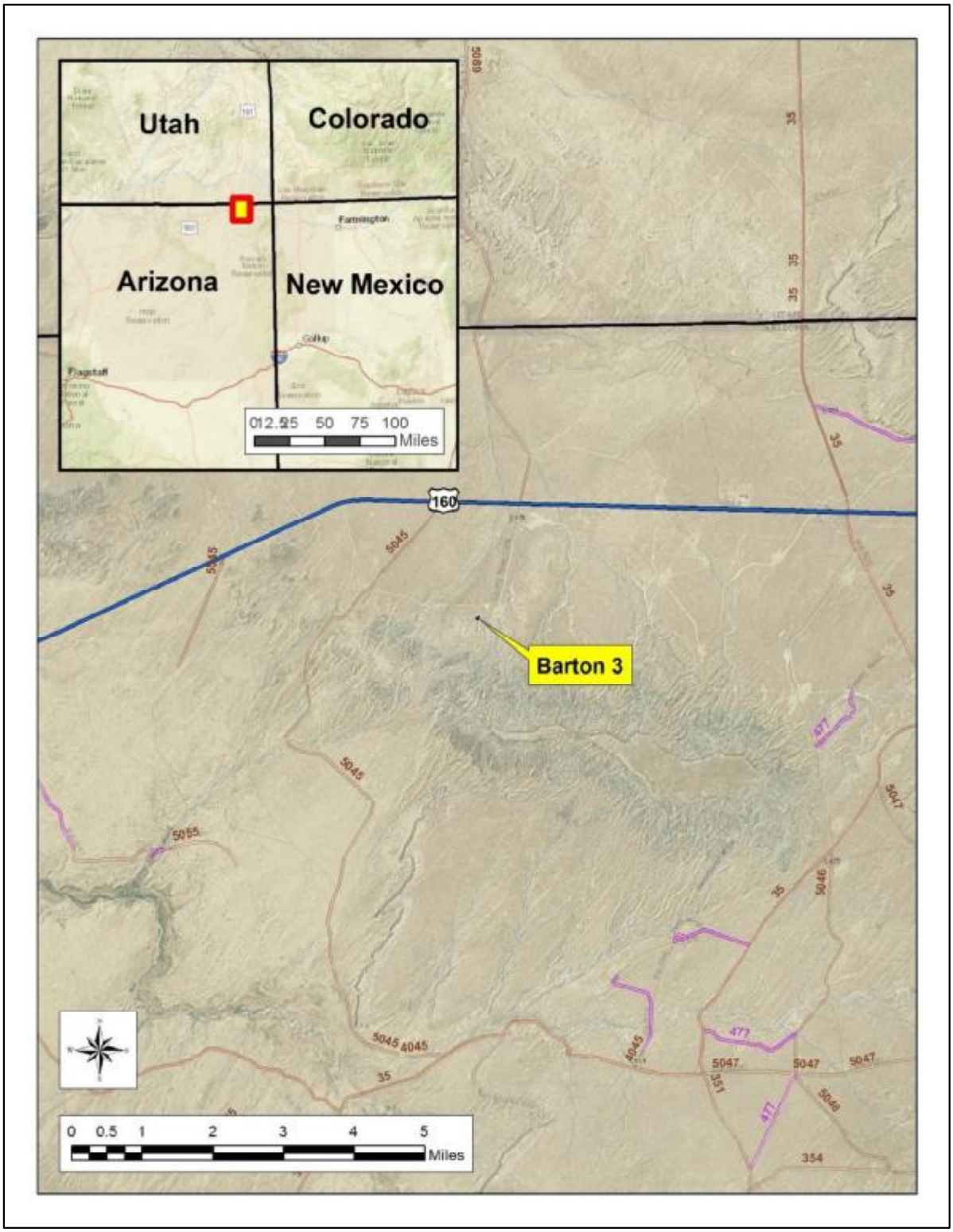

Figure 1. Location of the Barton 3 Abandoned Uranium Mine

Table 1. Detection systems used in the GPS-Based gamma surveys.

Survey Area	Ludlum Model 44-10	Ludlum Model 2221 Ratemeter/Scaler
Potential Background Reference Areas	PR303727[a]	254772 [a]
Survey Area	PR29260	254757
	PR295014	196086
	PR320678	282971
	PR303727[a]	254772 [a]
	PR355763	138368

Notes:
[a]Detection system used in the correlation studies described in Section 3.0.

2.1 Potential Background Reference Areas

Three potential Background Reference Areas were surveyed, the locations and results of which are depicted on Figure 2. BG1, BG2, and BG3 in the figure are Background Reference Areas 1, 2, and 3, respectively. Table 2 lists a summary of the gamma count rates, which in:

- BG1 ranged from 7,228 to 36,911 counts per minute (cpm), with a mean and median of 11,990 and 9,936 cpm, respectively.
- BG2 ranged from 5,407 to 8,979 cpm, with a mean and median of 7,198 and 7,148 cpm, respectively.
- BG3 ranged from 6,583 to 11,726 cpm, with a mean and median of 9,354 and 9,290 cpm, respectively.

The higher count rates observed in BG1 were associated with grey/green sands.

Figure 3 depicts histograms of the gamma count rates in the Background Reference Areas. The red and green lines on the figure are theoretical normal and lognormal distributions, respectively. They are presented to show what could be expected if the distributions were normal or lognormal.

Table 2. Summary statistics for gamma count rates in the potential Background Reference Areas.

	Gamma Count Rate (cpm)					
Potential Background Reference Area	n	Minimum	Maximum	Mean	Median	Standard Deviation
1	310	7,228	36,911	11,990	9,936	5,337
2	186	5,407	8,979	7,198	7,148	649
3	474	6,583	11,726	9,354	9,290	749

Notes:
cpm = counts per minute

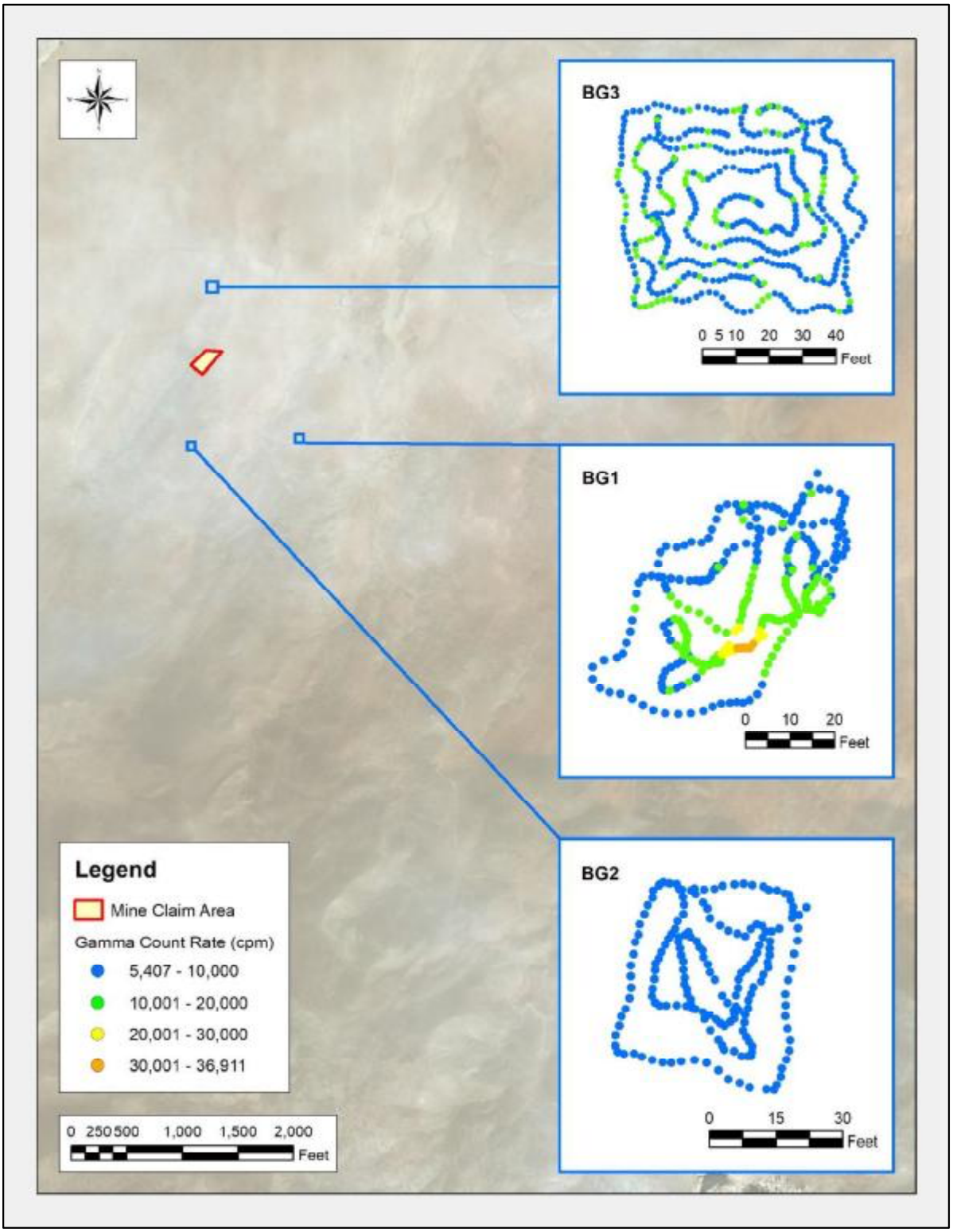

Figure 2. Gamma count rates in the potential Background Reference Areas.

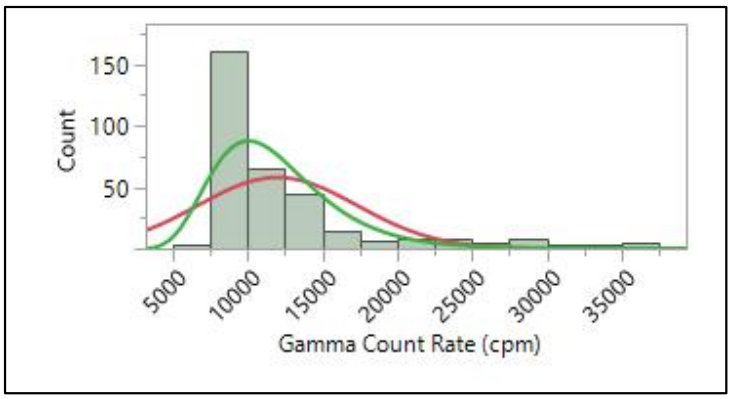

a. Background Reference Area 1

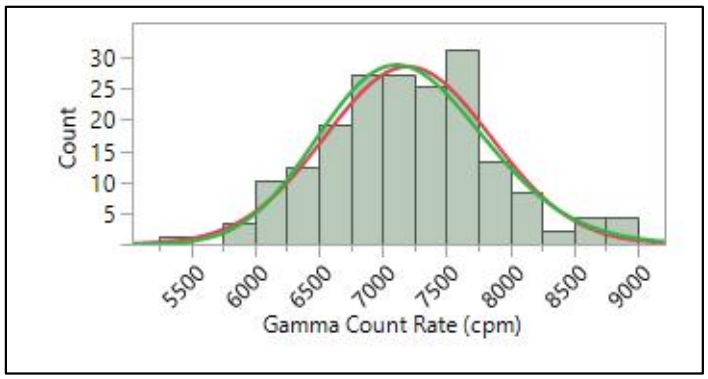

b. Background Reference Area 2

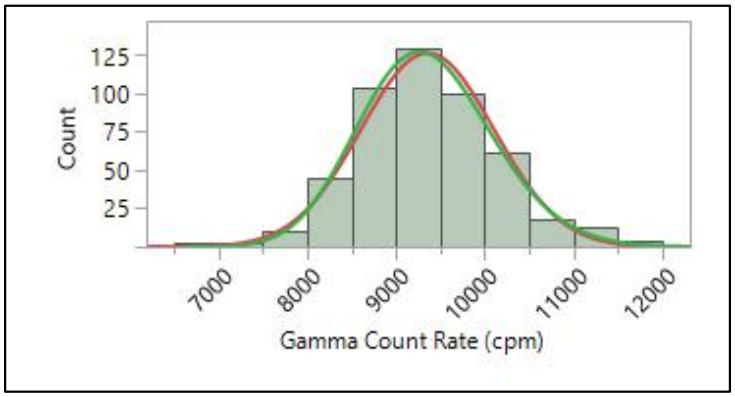

c. Background Reference Area 3

Figure 3. Histograms of gamma count rates in the Background Reference Areas.

2.2 Survey Area

The gamma count rates observed in the Survey Area are depicted in Figure 4. The highest count rates were observed north of the mine claim, on and around the reclaimed area.

Figure 5 is a histogram of the gamma count rate measurements made in the Survey Area, including the area surveyed outside the 100-ft buffer. As stated in Section 2.1, the red and green lines on the figure are theoretical normal and lognormal distributions, respectively. They are presented to show what could be expected if the distributions were normal or lognormal. The distribution of the right-tailed set of measurements, evaluated using U.S. Environmental Protection Agency software ProUCL (version 5.1.002), is not defined. The box plot in Figure 6 depicts cutoffs as horizontal bars, from bottom to top, for the following values or percentiles: minimum, 0.5, 2.5, 10, 25, 50, 75, 90, 97.5, 99.5, and maximum. The 25th, 50th, and 75th percentiles (the three horizontal lines of the box inside the box plot) are 9,448, 10,723, and 13,142 cpm, respectively.

Table 3 is a statistical summary of the measurements, which range from 5,930 to 61,743 cpm and have a central tendency (median) of 10,723 cpm.

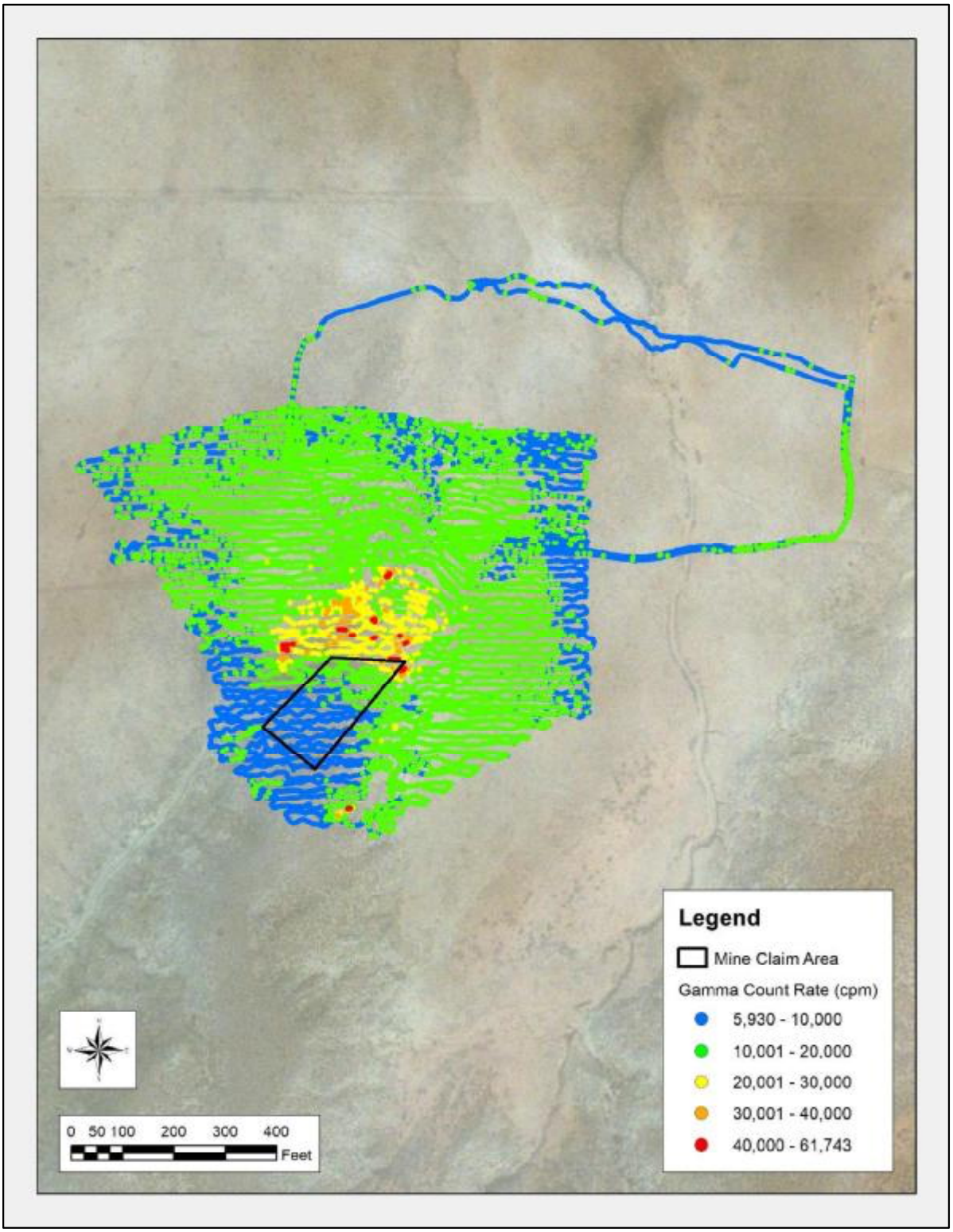

Figure 4. Gamma count rates in the Survey Area.

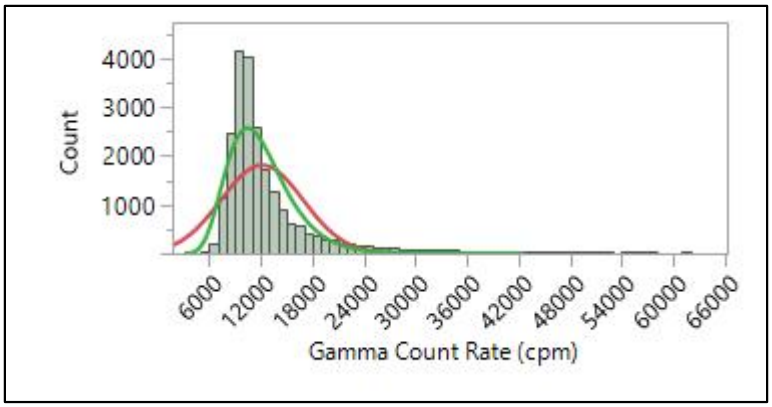

Figure 5. Histogram of gamma count rates in the Survey Area.

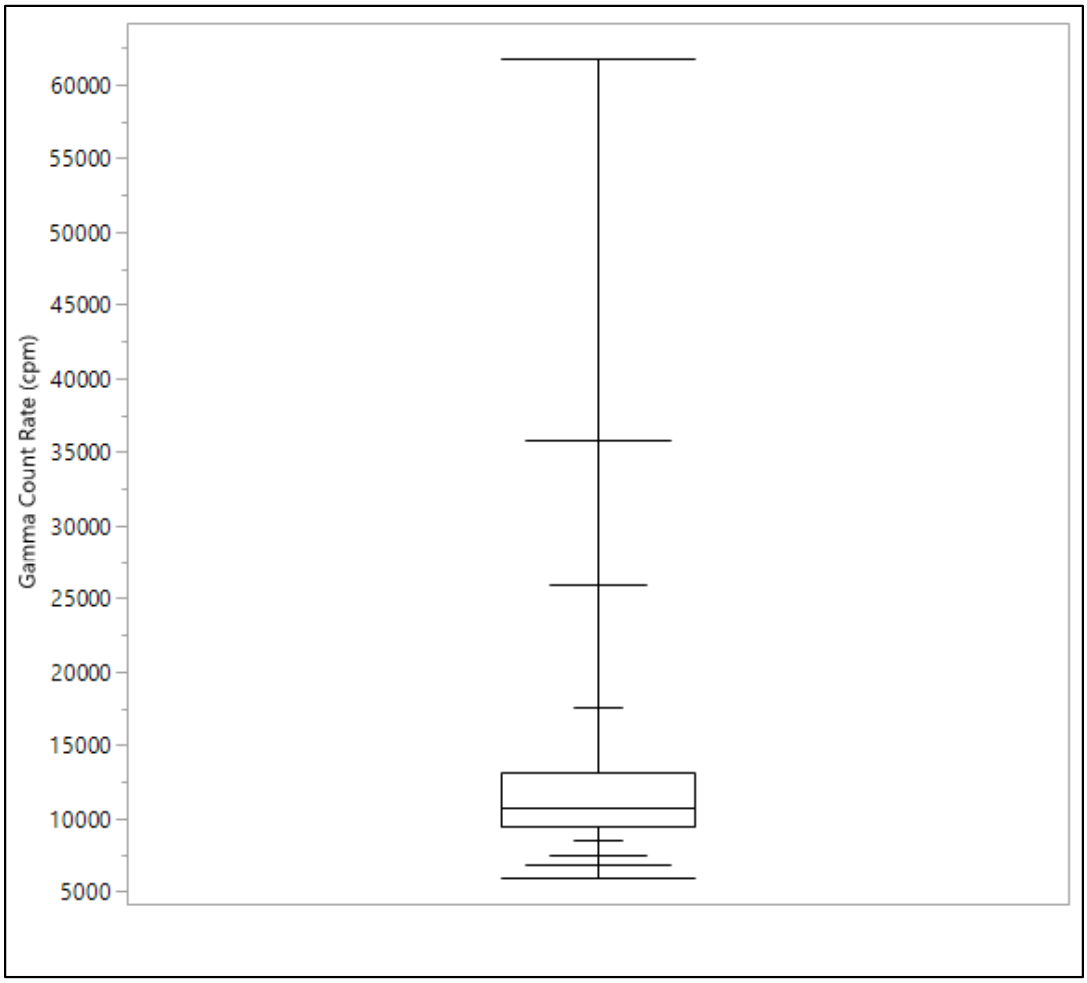

Figure 6. Box plot of gamma count rates in the Survey Area.

Table 3. Summary statistics for gamma count rates in the Survey Area.

Parameter	Gamma Count Rate (cpm)
n	21,694
Minimum	5,930
Maximum	61,743
Mean	12,164
Median	10,723
Standard Deviation	4,785

Notes:
cpm = counts per minute

3.0 Correlation Studies

The following sections address the activities under two types of correlation studies outlined in the RSE Work Plan: comparisons of 1) radium-226 concentrations in surface soils and gamma count rates and 2) exposure rates and gamma count rates. GPS-based gamma count rate measurements were made over small areas for the former study. The means of the measurements were used in this case. Static gamma count rate measurements, co-located with exposure rate measurements, were used in the latter study.

3.1 Radium-226 concentrations in surface soils and gamma count rates

On October 14, 2016 field personnel made GPS-based gamma count rates measurements and collected five-point composite samples of surface soils in each of five areas at the AUM. These areas were selected using criteria established in the RSE Work Plan. No DQO was established for homogeneity of the correlation plots and as described in Section 4.3 and Appendix E of the RSE Work Plan, homogeneity of the correlation plots was evaluated qualitatively. Sub-samples were collected from the correlation plot centroid and at each corner of the plot. The activities were performed contemporaneously, by area and all on the same day, such that variations in the gamma count rate measurements could be limited largely to those posed by the soils and rocks at the locations. Figure 7 shows the GPS-based gamma count rate measurements in the five areas (labeled with location identifiers).

The soil samples were analyzed by ALS Laboratories in Ft Collins, CO for radium-226 and isotopic thorium. The latter analysis was included to assess the potential effects of thorium series isotopes on the correlation and evaluate thorium-230 and radium-226 activities to indicate the status of equilibrium in the uranium decay series. Table 4 lists the results of the gamma count rate measurements and radium-226 concentrations in the soil samples. The means of the gamma count rate measurements range from 8,673 to 32,608 cpm. The concentrations of radium-226 in the soil samples range from 0.98 to 10.6 pCi/g.

Table 5 lists the concentrations of isotopes of thorium (thorium-228, -230, and -232) in the same soil samples. Laboratory analyses are presented in Appendix F.2, Laboratory Analytical Data and Data Validation Report, in the “Barton 3 Removal Site Evaluation Report” (Stantec, 2018).

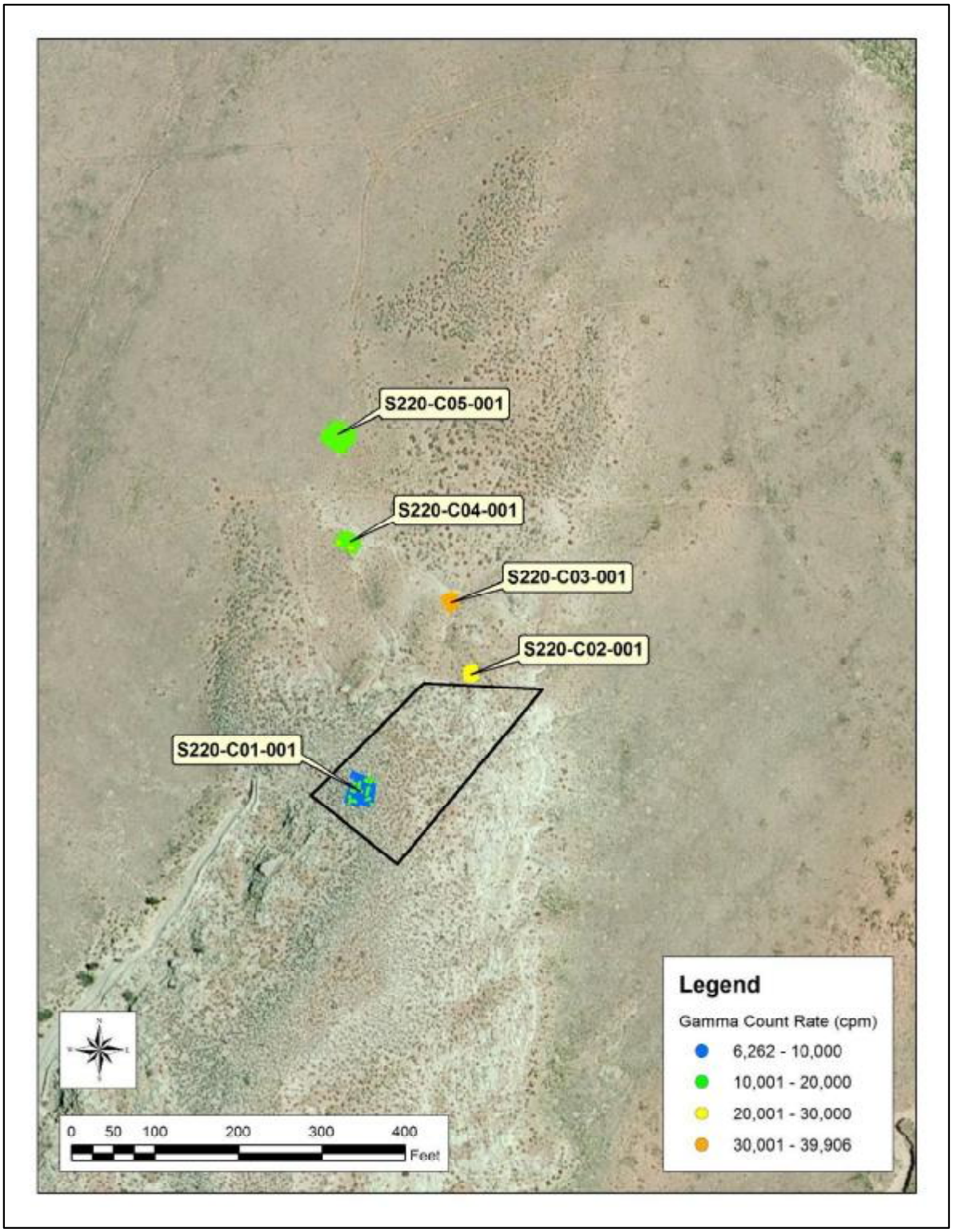

Figure 7. GPS-based gamma count rate measurements made for the correlation study.

Table 4. Gamma count rates and associated concentrations of radium-226 in samples of surface soils obtained in the correlation study.

		Gamma Count Rate (cpm)				Ra-226 (pCi/g)		
Location	Area (m^2)	Mean	Minimum	Maximum	σ	Result	Error ±2σ	MDC
S220-C01-001	120.1	8,673	6,262	13,383	1,051	0.98	0.26	0.46
S220-C02-001	30.2	23,849	19,568	29,530	2,006	6.44	0.84	0.4
S220-C03-001	33.0	32,608	27,746	39,906	2,372	10.6	1.4	0.6
S220-C04-001	56.4	17,557	14,336	21,006	1,151	6.73	0.89	0.46
S220-C05-001	108.5	12,564	10,126	17,552	1,080	3.52	0.51	0.35

Notes:
cpm = counts per minute
MDC = minimum detectable concentration
m^2 =square meters
pCi/g = picocuries per gram
σ = standard deviation

Table 5. Concentrations of isotopes of thorium in samples of surface soils obtained in the correlation study.

	Thorium-228 (pCi/g)			Thorium-230 (pCi/g)			Thorium-232 (pCi/g)		
Sample ID	Result	Error ± 2 σ	MDC	Result	Error ± 2 σ	MDC	Result	Error ± 2 σ	MDC
S220-C01	0.416	0.086	0.039	0.92	0.17	0.07	0.459	0.09	0.02
S220-C02	0.285	0.065	0.03	4.85	0.77	0.07	0.278	0.062	0.016
S220-C03	0.256	0.059	0.031	9.3	1.4	0.1	0.258	0.058	0.018
S220-C04	0.207	0.055	0.035	6.13	0.97	0.07	0.262	0.062	0.022
S220-C05	0.315	0.07	0.033	2.92	0.47	0.07	0.274	0.061	0.019

Notes:
MDC = minimum detectable concentration
pCi/g = picocuries per gram
σ = standard deviation

A model was made of the results in Table 4, predicting the concentrations of radium-226 in surface soils from the mean gamma count rate in each area. The mean relationship between the measurements, shown in **Figure 8**, is a linear function with an adjusted Pearson's Correlation Coefficient (adjusted R^2) of 0.89, as expressed in the equation:

$$\text{Gamma Count Rate (cpm)} = 2499 \times [\text{radium-226 (pCi/g)}] + 4918$$

The root mean square error and p-value for the model are 3.2×10^3 and 0.0.01, respectively; these parameters are not data quality objectives (DQOs) and are included only as information. The R^2 value for this model exceeds the project DQO of 0.8.

This equation was used to convert the gamma count rate measurements observed in the gamma surveys to predicted concentrations of radium-226. **Table 6** presents summary statistics for the predicted concentrations of radium-226 in the Survey Area. The range of the

predicted concentrations of radium-226 in the Survey Area is 0.4 to 22.7 pCi/g, with a mean and median of 2.9 and 2.3 pCi/g, respectively. Note that the radium-226 concentrations predicted from gamma count rate measurements exceeding approximately 33,000 cpm are extrapolated from the regression model and are outside of the correlation dataset and therefore inherently uncertain. While the gamma correlation equation can be used to convert gamma count rates to concentrations of Ra-226 in soil, the resulting radium concentrations are highly uncertain estimates, as the wide prediction interval bands illustrated in Figure 8 demonstrate. Users of the regression equation should be aware of the limitations of the dataset and be cautious when estimating radium-226 concentrations.

Figure 9 shows the predicted concentrations of radium-226, the spatial and numerical distribution of which mirror those depicted in Figure 4.

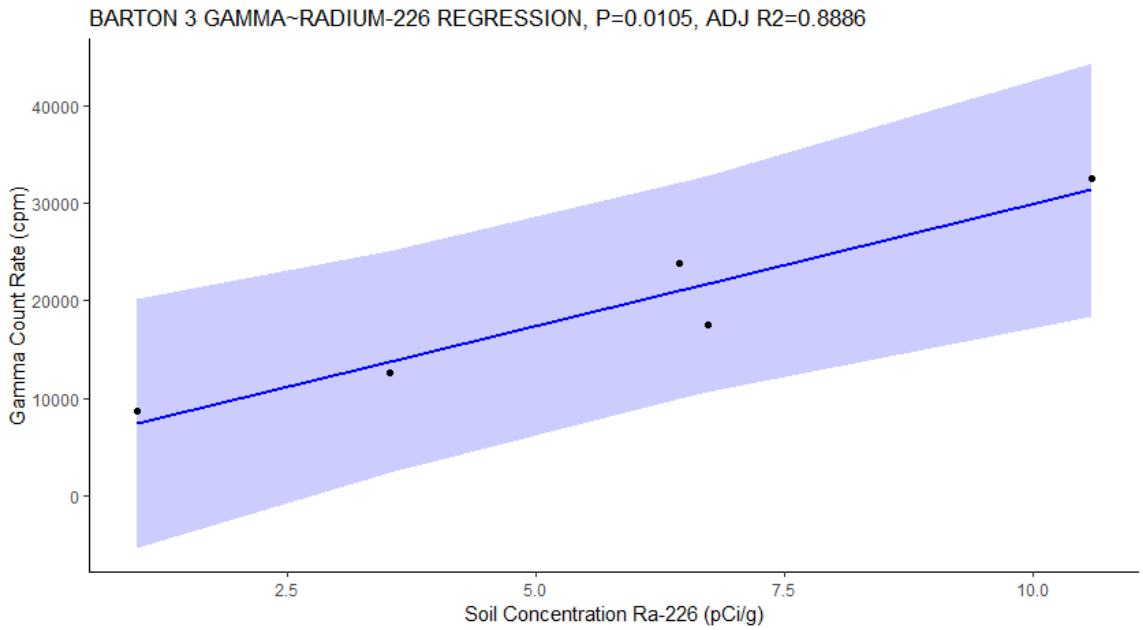

Figure 8. Correlation of gamma count rates and concentrations of radium-226 in surface soils (blue line) with 95% upper prediction level bands plotted (shaded blue area).

Table 6. Predicted concentrations of radium-226 in the Survey Area.

Parameter	Radium-226 (pCi/g)
n	21,694
Minimum	0.4
Maximum	22.7
Mean	2.9
Median	2.3
Standard Deviation	1.9

Notes:
pCi/g = picocuries per gram

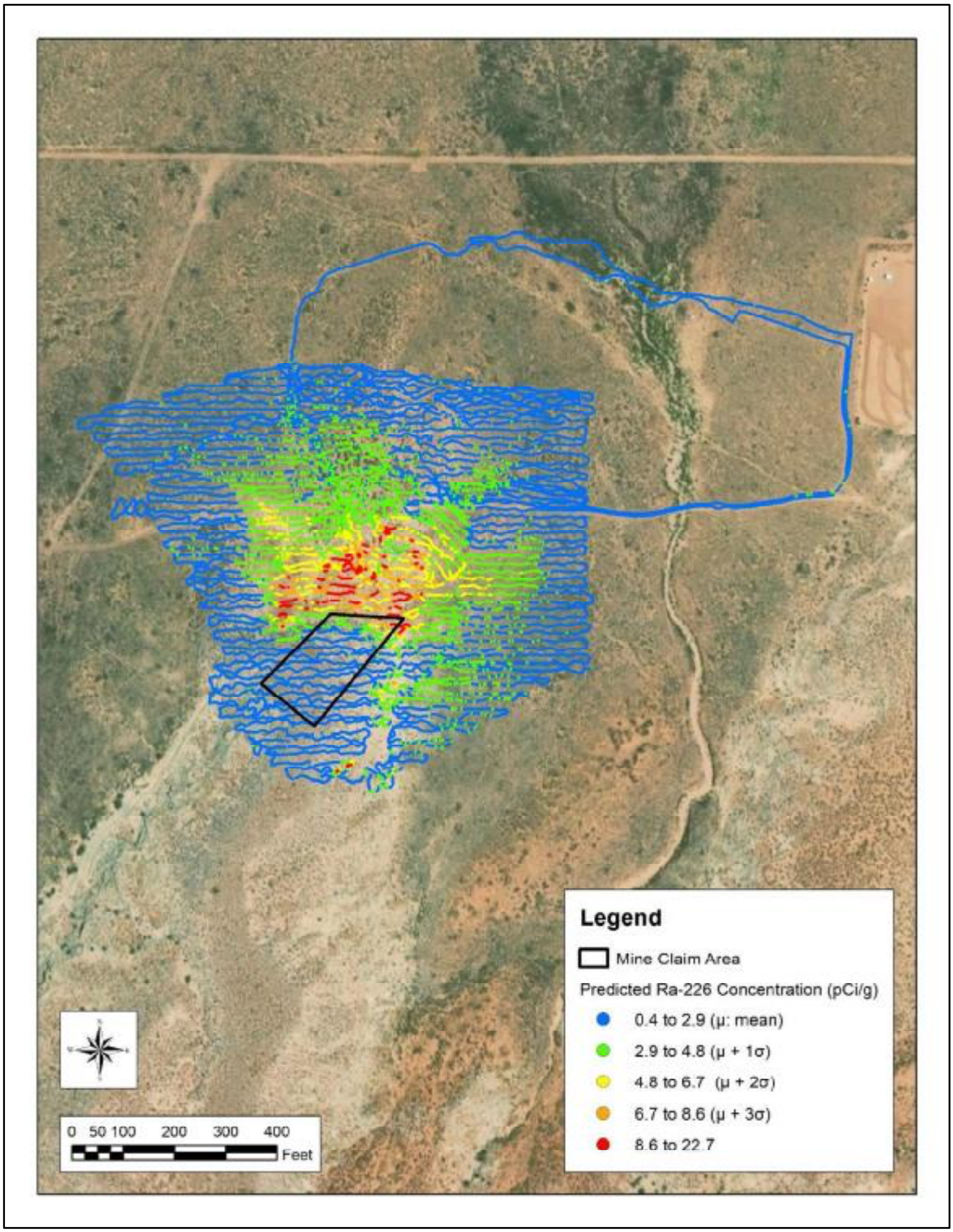

Figure 9. Predicted concentrations of radium-226 in the Survey Area.

Soil concentrations of potassium-40 (K-40) were not expected to be spatially variable within the site, and therefore this radionuclide was not separately accounted for in the RSE Work Plan. If K-40 concentrations did vary, this variability would be included in the regression model and, if the magnitude of the effect were sufficiently large, would result in failure of DQOs related to the regression analysis.

A multivariate linear regression (MLR) was used to evaluate the influence of thorium-232 and thorium-228, isotopes in the thorium series, on the average gamma count rate in the correlation locations. The MLR model was first run using radium-226, thorium-232, and thorium-228 as predictors of gamma count rate. None of the prediction variables in this model exceeded the $p = 0.05$ significance criterion, and therefore were not significant predictors of gamma count rate collectively. The MLR model was subsequently run without thorium-228. For the second model, the p-values for radium-226 and thorium-232 were both greater than 0.05 (0.06 and 0.5 respectively) and therefore not significant predictors of gamma count rate collectively. Thorium-232 and radium-226 were then each modelled individually as a predictor of gamma count rate. The p-value for thorium-232 was 0.24 with an adjusted R^2 of 0.22. The thorium-232 coefficient is not significant and the R^2 value does not meet the project DQO. Subsequently we conclude that thorium-232 and thorium-228 concentrations in soil are not significant predictors of gamma count rate. Finally, the p-value for radium-226 as a predictor of gamma count rate was significant ($p = 0.01$), as described above, and the adjusted R^2 value (0.89) exceeded the applicable project DQO ($R^2 > 0.8$).

The depletion of surface radon-222 in surface soil due to environmental factors is assumed to be relatively constant across the correlation locations (i.e., the loss is a fixed fraction of the available source). Provided this is the case, any loss of radon-222 in surface soil is unimportant and accounted for within the statistical model. If the loss is not a consistent fraction at each correlation location, it is one of many potential correlation confounders that are all linked to spatial heterogeneity of the environmental conditions, and especially spatial heterogeneity of the soil matrix.

The presence of heterogeneous concentrations of gamma emitting radionuclides in sub-surface soil can affect the gamma correlation model. If subsurface soil concentrations of gamma emitting radionuclides were variable between correlation locations, this variability would be included in the regression model, and if the magnitude of the effect were sufficiently large, it would result in failure of the DQOs related to the regression analysis.

3.2 Equilibrium in the uranium series

Secular equilibrium is a condition that occurs when the half-life of a decay-product nuclide is significantly shorter than that of its parent nuclide. After a period of ingrowth equal to approximately seven times the half-life of the decay product, the two nuclides effectively decay with the half-life of the parent. When two radionuclides are in secular equilibrium, their activities are equal.

Equilibrium, for the purpose of this report, is defined as a condition whereby a parent nuclide and its decay product are present in the environment at a fixed ratio, but this ratio – for whatever reason – is not a one-to-one relationship indicative of secular equilibrium. Most commonly, an equilibrium condition results from an environmental process which chemically selects for and transports one nuclide

(parent or decay product) away from the other nuclide. Because a consistent fraction of one nuclide has been removed, the two nuclides are present at a fixed ratio other than one-to-one.

Determination of secular equilibrium for an AUM can be an important part of the risk assessment process, as the assumed fraction of radium-226 decay products present in the environment greatly influences a hypothetical receptor's radiation dose and mortality risk. However, it is also acceptable and conservative to assume secular equilibrium between radium-226 and its decay products for the purpose of risk assessment, and therefore to avoid the need to conclusively determine the secular equilibrium status of an AUM. Thus, an inconclusive result regarding secular equilibrium is not a study data gap, as the risk assessment phase may still proceed, provided that conservative assumptions are included regarding equilibrium concentrations of radium-226 decay products.

Regardless, the RSE Work Plan specified that an evaluation of secular equilibrium would be made at each of the 16 Trust AUMs, and so a robust statistical examination of secular equilibrium status for thorium-230 and radium-226 was conducted. The RSE Work Plan did not require an evaluation of equilibrium condition of uranium-238 and uranium-234 because the natural activity abundance for these isotopes is expected and therefore assumed. Likewise, thorium-234 and protactinium-234m were not evaluated since their half-lives are sufficiently short that secular equilibrium can be assumed. Uranium-235 is not in the uranium-238 decay series therefore it was not evaluated. The ratio of thorium-230 to radium-226 can be evaluated even though different analytical methods were used to measure activity concentrations. Radium-226 was measured by EPA method 901.1m, which is a total activity method and thorium-230 was measured by alpha spectroscopy following digestion with hydrofluoric acid, which is also a total-activity method. Thus, it is appropriate to compare the two results.

The evaluation of secular equilibrium for each mine site proceeded as follows:

1. Construction of a figure that depicts soil concentrations of Th-230 plotted against soil concentrations of Ra-226.
2. Simple linear regression is performed on the dataset; the p-value and the adjusted R^2 are recorded. The resulting linear model and the 95% UCL bands are plotted on the figure generated in step 1.
3. The line y=x is added to the figure generated in step 2 (this line represents a perfect 1:1 ratio between Th-230 to Ra-226, indicative of secular equilibrium).
4. An examination of the model and the figure is made sequentially:
    a. If the p-value for the regression slope is insignificant (i.e., $p > 0.05$) or the adjusted R^2 does not meet the study's data quality objective (Adjusted $R^2 > 0.8$), ERG concludes that there is insufficient evidence to conclude that Ra-226 and Th-230 are in equilibrium (secular or otherwise).

b. If the p-value for the regression slope is significant (i.e., $p < 0.05$) and the adjusted R^2 meets the DQO (Adjusted $R^2 > 0.8$) there are two possible conditions, which are evaluated via visual examination of the figure generated in step 3.

   i. If the y=x line falls fully within the bounds of the 95% UCL bands on the regression, ERG concludes that there is evidence that Ra-226 and Th-230 are in secular equilibrium at the site.

   ii. If the y=x line falls partially or completely outside the bounds of the 95% UCL bands on the regression, ERG concludes that there is evidence that Ra-226 and Th-230 are in equilibrium, but not secular equilibrium at the site.

Based on this method, ERG concludes there is evidence that thorium-230 and radium-226 are in equilibrium, but not secular equilibrium (Figure 10).

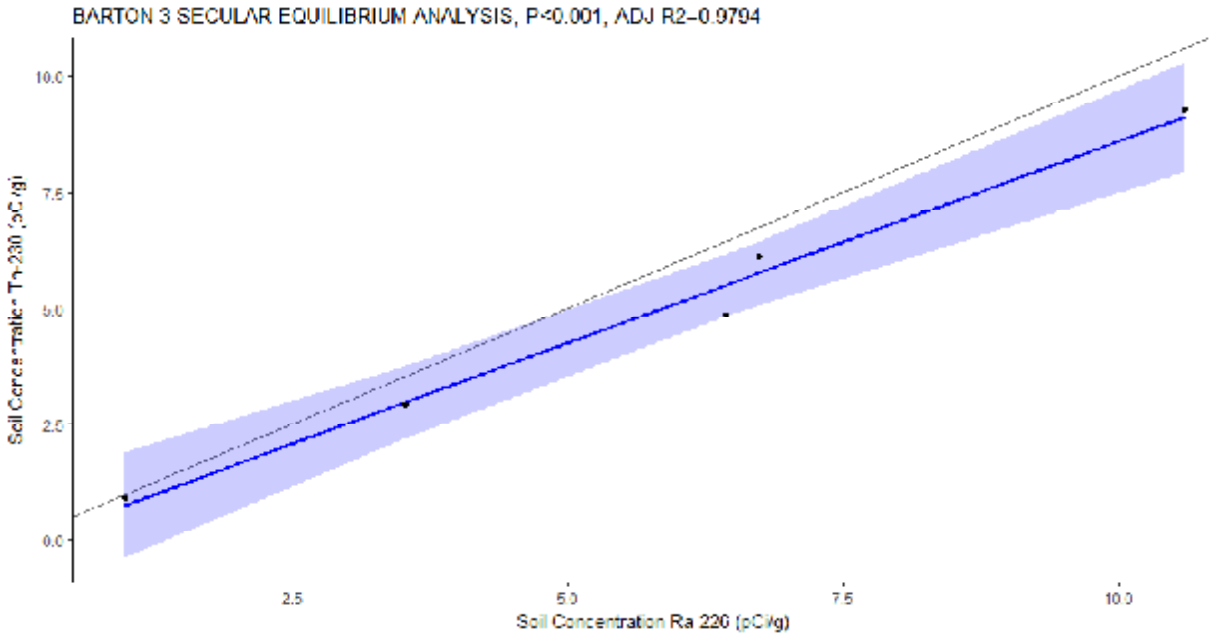

Figure 10. Evaluation of secular equilibrium in the uranium decay series.

3.3 Exposure rates and gamma count rates

On October 14, 2016 field personnel made co-located one-minute static count rate and exposure rate measurements at the five locations within the Survey Area, representing the range of gamma count rates obtained in the GPS-based gamma survey. Figure 7 shows the locations of the co-located measurements, which were made in the centers of the areas.

The gamma count rate and exposure rate measurements were made at 0.5 m and 1 m above the ground surface, respectively. The gamma count rate measurements were made using one of the sodium iodide detection systems used in the GPS-based gamma survey of the AUM (Serial Number PR303727/254772). The exposure rate measurements were made using a Reuter Stokes Model RSS-131 (Serial Number 07J00KM1) high pressure ionization chamber (HPIC) at six-second intervals for about 10 minutes. The exposure rates used in the comparison was the mean of these measurements, less those occurring in initial instrument spikes. The HPIC was in current calibration and function checked before and after use. A correction factor of 1.02 was applied to the measured value per the manufacturer's recommendation by the software of the unit. Calibration forms for the HPIC are provided in Appendix A. Table 7 presents the results for the two types of measurements made at each of the five locations. Appendix B presents the individual (one second) exposure rate measurements.

The best predictive relationship between the measurements is linear with a R^2 of 0.9989. The root mean square error and p-value for the model are 0.192959 and less than 0.0001, respectively; these parameters are not DQOs and are included only as information.

The following equation is the linear regression (shown in **Figure 11**) between the mean exposure rate and gamma count rate results in Table 7 that was generated using MS Excel:

$$\text{Exposure Rate } (\mu R/h) = 5\text{x}10^{-4} \text{ x Gamma Count Rate (cpm)} + 6.4064$$

Figure 12 presents the exposure rates predicted from the gamma count rate measurements, the spatial and numerical distribution of which mirror those depicted in Figure 4.

Tables 8 and 9 present summary statistics for the predicted exposure rates in the three Background Reference Areas and AUM, respectively. The range of predicted exposure rates at:

- BG1 is 10.0 to 24.9 µR/h, with a mean and median of 12.4 and 11.4 µR/h, respectively
- BG2 is 9.1 to 10.9 µR/h, with a mean and median of 10.0 µR/h
- BG3 is 9.7 to 12.3 µR/h, with a mean and median of 11.1 µR/h

The range of predicted exposure rates at the Survey Area is 9.4 to 37.3 µR/h, with a mean and median of 12.5 and 11.8 µR/h, respectively.

Table 7. Co-located gamma count rate and exposure rate measurements.

Location	Gamma Count Rate (cpm)	Exposure Rate (µR/h)
S220-C01-001	8,526	10.7
S220-C02-001	23,441	18.8
S220-C03-001	33,160	23.4
S220-C04-001	17,906	15.7
S220-C05-001	12,548	12.9

Notes:
cpm = counts per minute
µR/h = microRoentgens per hour

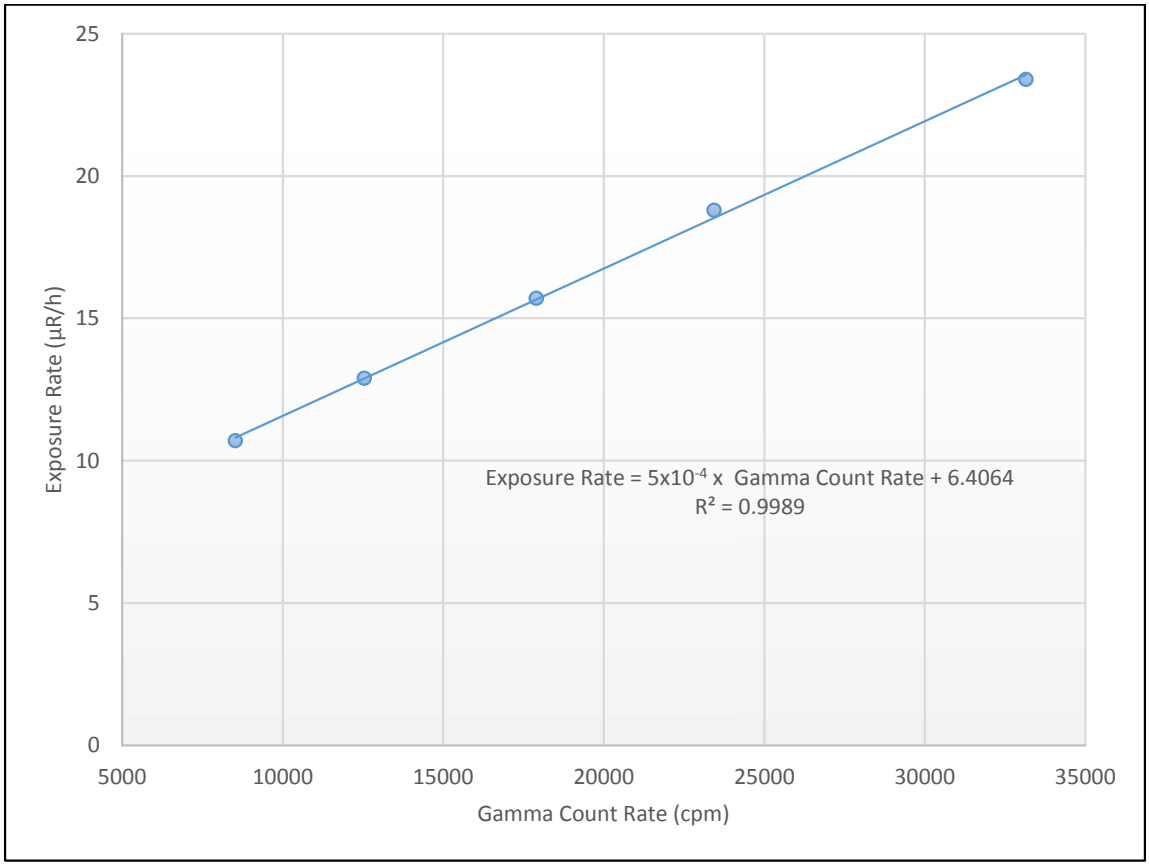

Figure 11. Correlation of gamma count rates and exposure rates.

Table 8. Predicted exposure rates in potential Background Reference Areas.

Potential Background Reference Area	BG1	BG2	BG3
Parameter	**Exposure Rate (µR/h)**		
n	310	186	474
Minimum	10.0	9.1	9.7
Maximum	24.9	10.9	12.3
Mean	12.4	10.0	11.1
Median	11.4	10.0	11.1
Standard Deviation	2.7	0.3	0.4

Notes:
BG1 = Background Reference Area 1
BG2 = Background Reference Area 2
BG3 = Background Reference Area 3
µR/h = microRoentgens per hour

Table 9. Predicted exposure rates in the Survey Area.

Parameter	Exposure Rate (µR/h)
n	21,694
Minimum	9.4
Maximum	37.3
Mean	12.5
Median	11.8
Standard Deviation	2.4

Notes:
µR/h = microRoentgens per hour

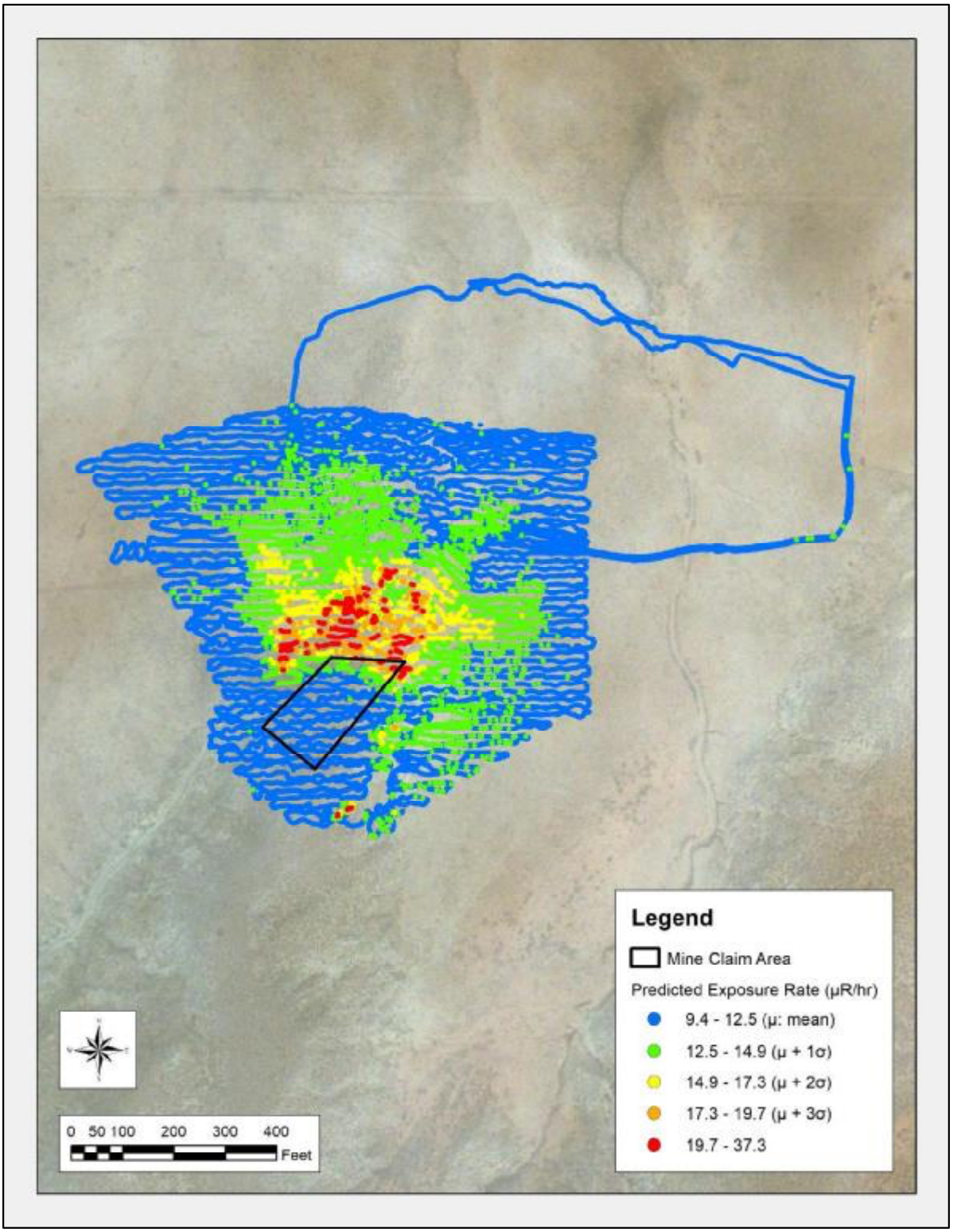

Figure 12. Predicted exposure rates in the Survey Area.

4.0 Deviations to RSE Work Plan

The RSE Work Plan specifies that the comparison of gamma count rates and radium concentrations in surface soils was to occur in 900 square foot areas. Field personnel adjusted the areas as necessary, to minimize the variability of gamma count rates observed, particularly where the spatial distribution of waste rock was heterogeneous.

5.0 Conclusions

The findings of the RSE pertaining to these activities are:

- The horizontal extent and magnitude of mining-related materials were delineated sufficiently to support additional characterization of the subsurface.
- Elevated count rates were observed largely on naturally occurring rock outcrops situated north of the mine claim.
- Three potential Background Reference Areas were established.
- The relationship between gamma count rates and concentrations of radium-226 in surface soils (0 to 0.5 ft below ground surface) is described by a linear regression model:

$$\text{Gamma Count Rate (cpm)} = 2499 \times [\text{radium-226 (pCi/g)}] + 4918$$

- The distribution of concentrations of radium-226 in surface soils predicted using this model is rightward tailed. The values in the Survey Area range from 0.4 to 22.7 pCi/g, with a central tendency (median) of 2.3 pCi/g.
- The thorium series radionuclides do not appear to affect the prediction of concentrations of radium-226 from gamma count rates.
- There is evidence that thorium-230 and radium-226 are in equilibrium, but not secular equilibrium
- The relationship between gamma count rates and exposure rates is described by a linear regression model:

$$\text{Exposure Rate (}\mu\text{R/h)} = \text{Gamma Count Rate (cpm)} \times 5\text{x}10\text{-}4 + 6.4064$$

- The distribution of exposure rates predicted using this model is rightward tailed. The values in the Survey Area range from 9.4 to 37.3, with a central tendency (median) of 11.8 µR/h.
- Further work is recommended to support a robust gamma correlation.

6.0 References

MWH, 2016. Navajo Nation AUM Environmental Response Trust, First Phase, Removal Site Evaluation Work Plan, October 24, 2016.

Stantec, 2018. Barton 3 Removal Site Evaluation Report, (to be finalized in October 2018).

Appendix A Instrument calibration and completed function check forms

Certificate of Calibration

Calibration and Voltage Plateau

Environmental Restoration Group, Inc.
8809 Washington St NE, Suite 150
Albuquerque, NM 87113
(505) 298-4224
www.ERGoffice.com

Meter:	Manufacturer:	Ludlum	Model Number:	2221r	Serial Number:	254772
Detector:	Manufacturer:	Ludlum	Model Number:	44-10	Serial Number:	PR303727

- [x] Mechanical Check
- [x] F/S Response Check
- [x] Geotropism
- [x] Meter Zeroed
- [x] THR/WIN Operation
- [x] Reset Check
- [x] Audio Check
- [x] Battery Check (Min 4.4 VDC)

HV Check (+/- 2.5%): [x] 500 V [x] 1000 V [x] 1500 V

Cable Length: [ ] 39-inch [x] 72-inch [ ] Other:

Source Distance: [ ] Contact [x] 6 inches [ ] Other:

Source Geometry [x] Side [ ] Below [ ] Other:

Threshold: 10 mV

Window:

Barometric Pressure: 24.6 inches Hg

Temperature: 73 °F

Relative Humidity: 20 %

Instrument found within tolerance: [x] Yes [ ] No

Range/Multiplier	Reference Setting	"As Found Reading"	Meter Reading	Integrated 1-Min. Count	Log Scale Count
x 1000	400	400	400	398773	400
x 1000	100	100	100		100
x 100	400	400	400	39887	400
x 100	100	100	100		100
x 10	400	400	400	3988	400
x 10	100	100	100		100
x 1	400	400	400	399	400
x 1	100	100	100		100

High Voltage	Source Counts	Background
700	53957	
800	65946	
900	69049	
950	69687	
1000	70240	9925
1050	70288	
1100	71224	
1150	71563	
1200	71161	

Voltage Plateau

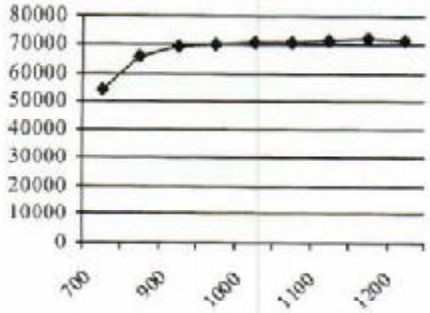

Comments: HV Plateau Scaler Count Time = 1-min. Recommended HV = 1000

Reference Instruments and/or Sources:

Ludlum pulser serial number: [ ] 97743 [x] 201932

[ ] Alpha Source: Th-230 @ 12,800 dpm (1/4/12) sn: 4098-03

[ ] Beta Source: Tc-99 @ 17,700 dpm (1/4/12) sn: 4099-03

Fluke multimeter serial number: [ ] 8749012

[x] Gamma Source Cs-137 @ 5.2 uCi (1/4/12) sn: 4097-03

[ ] Other Source:

Calibrated By: [signature]

Calibration Date: 1-20-16

Calibration Due 1-20-17

Reviewed By: [signature]

Date: 1/20/16

ERG Form ITC. 101.A

This calibration conforms to the requirements and acceptable calibration conditions of ANSI N323A - 1997

Certificate of Calibration

Calibration and Voltage Plateau

Environmental Restoration Group, Inc.
8809 Washington St NE, Suite 150
Albuquerque, NM 87113
(505) 298-4224
www.ERGoffice.com

Meter:	Manufacturer:	Ludlum	Model Number:	2221r	Serial Number:	196086
Detector:	Manufacturer:	Ludlum	Model Number:	44-10	Serial Number:	PR295014

✔ Mechanical Check ✔ THR/WIN Operation
✔ F/S Response Check ✔ Reset Check
✔ Geotropism ✔ Audio Check
✔ Meter Zeroed ✔ Battery Check (Min 4.4 VDC)

HV Check (+/- 2.5%): ✔ 500 V ✔ 1000 V ✔ 1500 V
Cable Length: 39-inch ✔ 72-inch Other:

Source Distance: Contact ✔ 6 inches Other:
Source Geometry: ✔ Side Below Other:

Threshold: 10 mV
Window:

Barometric Pressure: 24.78 inches Hg
Temperature: 74 °F
Relative Humidity: 20 %

Instrument found within tolerance: ✔ Yes No

Range/Multiplier	Reference Setting	"As Found Reading"	Meter Reading	Integrated 1-Min. Count	Log Scale Count
x 1000	400	400	400	399802	400
x 1000	100	100	100		100
x 100	400	400	400	39989	400
x 100	100	100	100		100
x 10	400	400	400	3999	400
x 10	100	100	100		100
x 1	400	400	400	400	400
x 1	100	100	100		100

High Voltage	Source Counts	Background
700	28456	
800	53330	
900	64430	
950	66209	
1000	68333	
1050	69077	
1100	69121	8924
1150	69973	
1200	70155	

Voltage Plateau

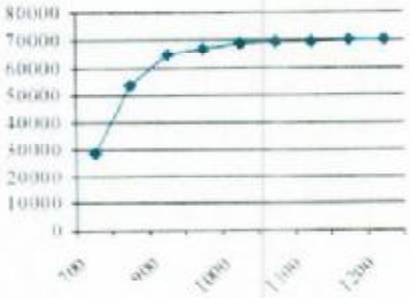

Comments: HV Plateau Scaler Count Time = 1-min. Recommended HV = 1100

Reference Instruments and/or Sources:

Ludlum pulser serial number: 97743 ✔ 201932
Alpha Source: Th-230 @ 12,800 dpm (1/4/12) sn: 4098-03
Beta Source: Tc-99 @ 17,700 dpm (1/4/12) sn: 4099-03

Fluke multimeter serial number: 87490128
✔ Gamma Source Cs-137 @ 5.2 uCi (1/4/12) sn: 4097-03
Other Source:

Calibrated By: [signature]
Calibration Date: 7/20/16 Calibration Due: 7/20/17

Reviewed By: [signature]
Date: 7/20/16

ERG Form ITC-101A

This calibration conforms to the requirements and acceptable calibration conditions of ANSI N323A-1997

Certificate of Calibration

Calibration and Voltage Plateau

Environmental Restoration Group, Inc.
8809 Washington St NE, Suite 150
Albuquerque, NM 87113
(505) 298-4224
www.ERGoffice.com

Meter:	Manufacturer:	Ludlum	Model Number:	2221r	Serial Number:	282971
Detector:	Manufacturer:	Ludlum	Model Number:	44-10	Serial Number:	PR320678

✔ Mechanical Check ✔ THR/WIN Operation
✔ F/S Response Check ✔ Reset Check
✔ Geotropism ✔ Audio Check
✔ Meter Zeroed ✔ Battery Check (Min 4.4 VDC)

HV Check (+/- 2.5%): ✔ 500 V ✔ 1000 V ✔ 1500 V
Cable Length: ☐ 39-inch ✔ 72-inch ☐ Other:

Barometric Pressure: 24.63 inches Hg
Temperature: 75 °F
Relative Humidity: 20 %

Source Distance: ☐ Contact ✔ 6 inches ☐ Other:
Threshold: 10 mV
Source Geometry: ✔ Side ☐ Below ☐ Other:
Window:

Instrument found within tolerance: ✔ Yes ☐ No

Range/Multiplier	Reference Setting	"As Found Reading"	Meter Reading	Integrated 1-Min. Count	Log Scale Count
x 1000	400	400	400	399936	400
x 1000	100	100	100		100
x 100	400	400	400	39984	400
x 100	100	100	100		100
x 10	400	400	400	3998	400
x 10	100	100	100		100
x 1	400	400	400	400	400
x 1	100	100	100		100

High Voltage	Source Counts	Background
700	57641	
800	65850	
900	68414	
950	68639	
1000	69410	9773
1050	69358	
1100	70301	
1150	81822	

Voltage Plateau

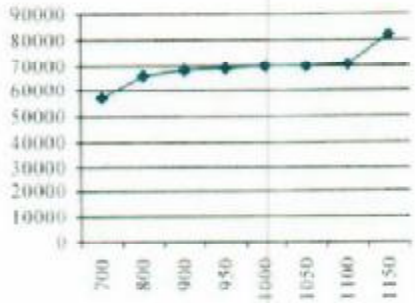

Comments: HV Plateau Scaler Count Time = 1-min. Recommended HV = 1000

Reference Instruments and/or Sources:

Ludlum pulser serial number: ☐ 97743 ✔ 201932
☐ Alpha Source: Th-230 sn: 4098-03 @ 12,800dpm/6,520 cpm (1/4/1
☐ Beta Source: Tc-99 sn: 4099-03 @ 17,700dpm/11,100cpm (1/4/12

Fluke multimeter serial number: ☐ 87490128
☐ Gamma Source Cs-137 @ 5.2 uCi (1/4/12) sn: 4097-03
☐ Other Source:

Calibrated By:

Calibration Date: 3-13-17 Calibration Due: 3-13-18

Reviewed By:

Date: 14 March 2017

ERG Form ITC. 101.A

This calibration conforms to the requirements and acceptable calibration conditions of ANSI N323A - 1997

Certificate of Calibration

Calibration and Voltage Plateau

Environmental Restoration Group, Inc.
8809 Washington St NE, Suite 150
Albuquerque, NM 87113
(505) 298-4224
www.ERGoffice.com

Meter:	Manufacturer:	Ludlum	Model Number:	2221r	Serial Number:	196086
Detector:	Manufacturer:	Ludlum	Model Number:	44-10	Serial Number:	PR295014

- ✔ Mechanical Check
- ✔ F/S Response Check
- ✔ Geotropism
- ✔ Meter Zeroed
- ✔ THR/WIN Operation
- ✔ Reset Check
- ✔ Audio Check
- ✔ Battery Check (Min 4.4 VDC)

HV Check (+/- 2.5%): ✔ 500 V ✔ 1000 V ✔ 1500 V

Cable Length: ☐ 39-inch ✔ 72-inch ☐ Other:

Source Distance: ☐ Contact ✔ 6 inches ☐ Other:

Source Geometry: ✔ Side ☐ Below ☐ Other:

Threshold: 10 mV

Window:

Barometric Pressure: 24.27 inches Hg

Temperature: 78 °F

Relative Humidity: 20 %

Instrument found within tolerance: ✔ Yes ☐ No

Range/Multiplier	Reference Setting	"As Found Reading"	Meter Reading	Integrated 1-Min. Count	Log Scale Count
x 1000	400	400	400	399386	400
x 1000	100	100	100		100
x 100	400	400	400	39949	400
x 100	100	100	100		100
x 10	400	400	400	3995	400
x 10	100	100	100		100
x 1	400	400	400	399	400
x 1	100	100	100		100

High Voltage	Source Counts	Background
700	28235	
800	52834	
900	64481	
950	66468	
1000	67321	
1050	69009	
1100	69981	9079
1150	69564	
1200	70538	

Voltage Plateau

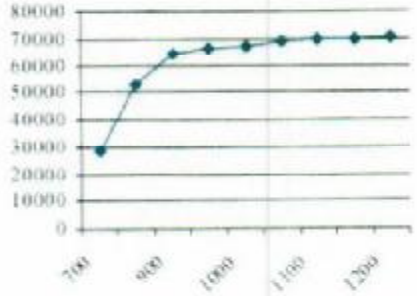

Comments: HV Plateau Scaler Count Time = 1-min. Recommended HV = 1100

Reference Instruments and/or Sources:

Ludlum pulser serial number: ☐ 97743 ✔ 201932

☐ Alpha Source: Th-230 @ 12,800 dpm (1/4/12) sn: 4098-03

☐ Beta Source: Tc-99 @ 17,700 dpm (1/4/12) sn: 4099-03

Fluke multimeter serial number: ☐ 87490128

✔ Gamma Source Cs-137 @ 5.2 uCi (1/4/12) sn: 4097-03

☐ Other Source:

Calibrated By:

Reviewed By:

Calibration Date: ~~3 March 17~~ 2/28/17 Calibration Due: ~~2 March 18~~ 2/28/18

Date: 3/1/17

ERG Form ITC.101.A

This calibration conforms to the requirements and acceptable calibration conditions of ANSI N323A - 1997

Certificate of Calibration

Calibration and Voltage Plateau

Environmental Restoration Group, Inc.
8809 Washington St NE, Suite 150
Albuquerque, NM 87113
(505) 298-4224
www.ERGoffice.com

Meter:	Manufacturer:	Ludlum	Model Number:	2221r	Serial Number:	254772
Detector:	Manufacturer:	Ludlum	Model Number:	44-10	Serial Number:	PR303727

- ✔ Mechanical Check
- ✔ F/S Response Check
- ✔ Geotropism
- ✔ Meter Zeroed
- ✔ THR/WIN Operation
- ✔ Reset Check
- ✔ Audio Check
- ✔ Battery Check (Min 4.4 VDC)

HV Check (+/- 2.5%): ✔ 500 V ✔ 1000 V ✔ 1500 V

Cable Length: ☐ 39-inch ✔ 72-inch ☐ Other:

Barometric Pressure: 24.24 inches Hg

Source Distance: ☐ Contact ✔ 6 inches ☐ Other:

Threshold: 10 mV

Temperature: 78 °F

Source Geometry: ✔ Side ☐ Below ☐ Other:

Window:

Relative Humidity: 20 %

Instrument found within tolerance: ✔ Yes ☐ No

Range/Multiplier	Reference Setting	"As Found Reading"	Meter Reading	Integrated 1-Min. Count	Log Scale Count
x 1000	400	400	400	399859	400
x 1000	100	100	100		100
x 100	400	400	400	39991	400
x 100	100	100	100		100
x 10	400	400	400	4001	400
x 10	100	100	100		100
x 1	400	400	400	400	400
x 1	100	100	100		100

High Voltage	Source Counts	Background
700	52821	
800	65213	
900	68644	
950	69245	
1000	69492	9111
1050	69792	
1100	70472	
1150	71183	
1200	70571	

Voltage Plateau

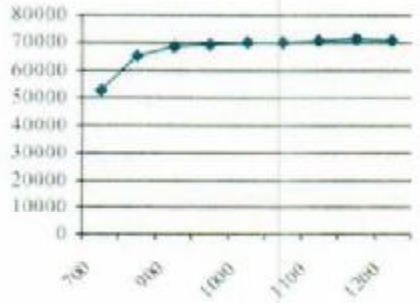

Comments: HV Plateau Scaler Count Time = 1-min. Recommended HV = 1000

Reference Instruments and/or Sources:

Ludlum pulser serial number: ☐ 97743 ✔ 201932

☐ Alpha Source: Th-230 @ 12,800 dpm (1/4/12) sn: 4098-03

☐ Beta Source: Tc-99 @ 17,700 dpm (1/4/12) sn: 4099-03

Fluke multimeter serial number: ☐ 87490128

✔ Gamma Source Cs-137 @ 5.2 uCi (1/4/12) sn: 4097-03

☐ Other Source:

Calibrated By:

Reviewed By:

Calibration Date: 2/28/17 ~~2 March 17~~

Calibration Due: 2/28/18 ~~2 March 18~~

Date: 3-1-17

ERG Form ITC. 10LA

This calibration conforms to the requirements and acceptable calibration conditions of ANSI N323A - 1997

Certificate of Calibration

Calibration and Voltage Plateau

Environmental Restoration Group, Inc.
8809 Washington St NE, Suite 150
Albuquerque, NM 87113
(505) 298-4224
www.ERGoffice.com

Meter: Manufacturer:	Ludlum	Model Number:	2221r	Serial Number:	254757
Detector: Manufacturer:	Ludlum	Model Number:	44-10	Serial Number:	PR292690

☐ Mechanical Check ☐ THR/WIN Operation
☐ F/S Response Check ☐ Reset Check
☐ Geotropism ☐ Audio Check
☐ Meter Zeroed ☐ Battery Check (Min 4.4 VDC)

HV Check (+/- 2.5%): ☐ 500 V ☐ 1000 V ☐ 1500 V
Cable Length: ☐ 39-inch ☑ 72-inch ☐ Other:

Source Distance: ☐ Contact ☑ 6 inches ☐ Other:
Source Geometry: ☑ Side ☐ Below ☐ Other:

Threshold: 10 mV
Window:

Barometric Pressure: 24.75 inches Hg
Temperature: 75 °F
Relative Humidity: 26 %

Instrument found within tolerance: ☑ Yes ☐ No

Range/Multiplier	Reference Setting	"As Found Reading"	Meter Reading	Integrated 1-Min. Count	Log Scale Count
x 1000	400				
x 1000	100				
x 100	400				
x 100	100				
x 10	400				
x 10	100				
x 1	400				
x 1	100				

See Ludlum Cal Sheet

High Voltage	Source Counts	Background
700	48461	
800	62632	
900	66021	
950	67593	
1000	67720	9478
1050	67893	
1100	68340	
1150	68592	
1200	68684	

Voltage Plateau

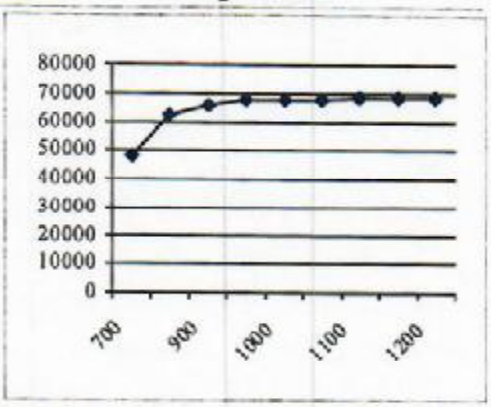

Comments: Comments: HV Plateau Scaler Count Time = 1-min. Recommended HV = 1000

Reference Instruments and/or Sources:

Ludlum pulser serial number: ☐ 97743 ☑ 201932
Fluke multimeter serial number: ☐ 87490128
☐ Alpha Source: Th-230 sn: 4098-03@12,800dpm/6,520 cpm (1/4/12)
☑ Gamma Source Cs-137 @ 5.2 uCi (1/4/12) sn: 4097-03
☐ Beta Source: Tc-99 sn: 4099-03@17,700dpm/11,100cpm(1/4/12)
☐ Other Source:

Calibrated By: [signature] Calibration Date: 8-21-17 Calibration Due: 8-21-18

Reviewed By: [signature] Date: 08/21/17

ERG Form ITC. 101.A

This calibration conforms to the requirements and acceptable calibration conditions of ANSI N323A - 1997

www.ludlums.com

Scientific and Industrial Instruments

CERTIFICATE OF CALIBRATION

501 Oak Street
325-235-5494
Sweetwater, TX 79556, U.S.A.

ACCREDITED
CERT # 4084.01

Customer ERG ORDER NO. 20315528/452181

Mfg. Ludlum Measurements, Inc. Model 2221 Serial No. 254757

Mfg. Model Serial No.

Cal. Date 25-Jul-17 Cal Due Date 25-Jul-18 Cal. Interval 1 Year Meterface 202-159

heck mark ☑ applies to applicable instr. and/or detector IAW mfg. spec. T. 74 °F RH 47 % Alt 706.0 mm Hg

☐ New Instrument Instrument Received ☐ Within Toler. +-10% ☐ 10-20% ☐ Out of Tol. ☑ Requiring Repair ☐ Other-See comments

☑ Mechanical ck. ☑ Meter Zeroed ☐ Background Subtract ☑ Input Sens. Linearity
☑ F/S Resp. ck ☑ Reset ck. ☑ Window Operation ☑ Geotropism
☑ Audio ck. ☐ Alarm Setting ck. ☑ Batt. ck.

☑ Calibrated in accordance with LMI SOP 14.8 ☐ Calibrated in accordance with LMI SOP 14.9

ıstrument Volt Set 1500 V Input Sens. 10 mV Det. Oper. V at mV Threshold Dial Ratio 100 = 10 mV

☐ HV Readout (2 points) Ref./Inst. 500 / 500 V Ref./Inst. 1500 / 1502 V

COMMENTS:

Calibrated with 39" cable.
Calibrated with Window in "OUT" position.
Firmware: 261027

amma Calibration: GM detectors positioned perpendicular to source except for M 44-9 in which the front of probe faces source.

RANGE/MULTIPLIER	REFERENCE CAL. POINT	INSTRUMENT REC'D "AS FOUND READING"	INSTRUMENT METER READING*
X 1000	400 Kcpm	N/A	400
X 1000	100 Kcpm		100
X 100	40 Kcpm		40
X 100	10 Kcpm		10
X 10	4 Kcpm		40
X 10	1 Kcpm		10
X 1	400 cpm		40
X 1	100 cpm		10

*Uncertainty within ± 10% C.F. within ± 20% ALL Range(s) Calibrated Electronically

	REFERENCE CAL. POINT	INSTRUMENT RECEIVED	INSTRUMENT METER READING*		REFERENCE CAL. POINT	INSTRUMENT RECEIVED	INSTRUMENT METER READING*
Digital Readout	400 Kcpm	N/A	3995 (0)	Log Scale	500 Kcpm	N/A	500 Kcpm
	40 Kcpm		3995		50 Kcpm		50
	4 Kcpm		400		5 Kcpm		5
	400 cpm		40		500 cpm		500 cpm
	40 cpm		4		50 cpm		50

.udlum Measurements, Inc. certifies that the above instrument has been calibrated by standards traceable to the National Institute of Standards and Technology, or to the calibration facilities of other International Standards Organization members, or have been derived from accepted values of natural physical constants or have been derived by the ratio type of calibration techniques. The calibration system conforms to the requirements of ANSI/NCSL Z540-1-1994 and ANSI N323-1978 ISO/IE 17025:2005(E) State of Texas Calibration License No. LO-1963

Reference Instruments and/or Sources: Cs-137 S/N: ☐ 059 ☐ 2171CP ☐ 2281CP ☐ 720 ☐ 734 ☐ 761 ☐ 1131 ☐ 1818 ☐ 1896 ☐ 1909 ☐ 1910CP ☐ 2024/2521
☐ 5717CO ☐ 5719CO ☐ 60646 ☐ 70897 ☐ 73410 ☐ E552 ☐ G112 ☐ 2166CP ☐ S-364 ☐ S-1054 ☐ T10081 ☐ T10082 Neutron Am-241 Be ☐ T-304 Ra-226 ☐ Y962

☐ Alpha S/N ☐ Beta S/N ☐ Other

☑ m 500 S/N 201934 ☐ Oscilloscope S/N ☑ Multimeter S/N 92780460

Calibrator Josie Ruiz Josie Ruiz Title Technician Date 25 July 17

QC'd By Title Service Dept QC Date 26 Jul 17

This certificate shall not be reproduced except in full, without the written approval of Ludlum Measurements, Inc.

AC Inst. Only ☐ Passed Dielectric (Hi-Pot) and Continuity Test ☐ Failed:

Certificate of Calibration

Calibration and Voltage Plateau

Environmental Restoration Group, Inc.
8809 Washington St NE, Suite 150
Albuquerque, NM 87113
(505) 298-4224
www.ERGoffice.com

Meter:	Manufacturer:	Ludlum	Model Number:	2221r	Serial Number:	138368
Detector:	Manufacturer:	Ludlum	Model Number:	44-10	Serial Number:	PR355763

- ☑ Mechanical Check
- ☑ F/S Response Check
- ☑ Geotropism
- ☑ Meter Zeroed
- ☑ THR/WIN Operation
- ☑ Reset Check
- ☑ Audio Check
- ☑ Battery Check (Min 4.4 VDC)

HV Check (+/- 2.5%): ☑ 500 V ☑ 1000 V ☑ 1500 V

Cable Length: ☐ 39-inch ☑ 72-inch ☐ Other:

Source Distance: ☐ Contact ☑ 6 inches ☐ Other:

Source Geometry: ☑ Side ☐ Below ☐ Other:

Threshold: 10 mV

Window:

Barometric Pressure: 24.75 inches Hg

Temperature: 76 °F

Relative Humidity: 20 %

Instrument found within tolerance: ☑ Yes ☐ No

Range/Multiplier	Reference Setting	"As Found Reading"	Meter Reading	Integrated 1-Min. Count	Log Scale Count
x 1000	400	400	400	398875	400
x 1000	100	100	100		100
x 100	400	400	400	39883	400
x 100	100	100	100		100
x 10	400	400	400	3988	400
x 10	100	100	100		100
x 1	400	400	400	398	400
x 1	100	100	100		100

High Voltage	Source Counts	Background
700	62275	
800	68049	
900	69726	
950	70112	9509
1000	70068	
1050	71042	
1100	77619	

Voltage Plateau

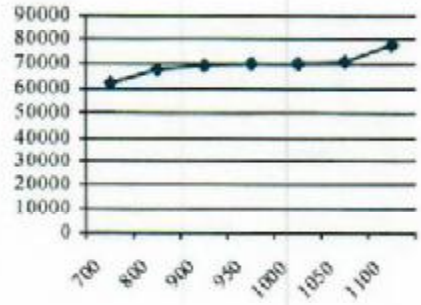

Comments: Comments: HV Plateau Scaler Count Time = 1-min. Recommended HV = 950

Reference Instruments and/or Sources:

Ludlum pulser serial number: ☐ 97743 ☑ 201932

Fluke multimeter serial number: ☐ 87490128

☐ Alpha Source: Th-230 sn: 4098-03@12,800dpm/6,520 cpm (1/4/12)

☑ Gamma Source Cs-137 @ 5.2 uCi (1/4/12) sn: 4097-03

☐ Beta Source: Tc-99 sn: 4099-03@17,700dpm/11,100cpm(1/4/12)

☐ Other Source:

Calibrated By: [signature]

Calibration Date: 9/17/17

Calibration Due: 9-17-18

Reviewed By: T. [signature]

Date: 09/08/17

ERG Form ITC. 101.A

This calibration conforms to the requirements and acceptable calibration conditions of ANSI N323A - 1997

K&S Associates, Inc.
1926 Elm Tree Drive
Nashville, Tennessee 37210-3718
Phone 800-522-2325 Fax 615-871-0856

ACCREDITED
CALIBRATION CERT #1866.01

CALIBRATION REPORT

SUBMITTED BY: ERG
8809 Washington Street Northeast
Suite 150
Albuquerque, NM 87113

INSTRUMENT: Reuter Stokes RSS-131, #07J00KM1

REPORT NUMBER: 161866
TEST NUMBER(S) M161588
REPORT DATE: June 29, 2016

The CALIBRATION COEFFICIENTS contained in this report were obtained by intercomparison with instruments calibrated by, or directly traceable to, the National Institute of Standards and Technology (NIST). K• S Associates, Inc. is licensed by the State of Tennessee (R-19075-G97, R-19136-B00) to perform calibrations, and is recognized by the Health Physics Society (HPS) as an ACCREDITED INSTRUMENT CALIBRATION LABORATORY. As part of the accreditation K • S participates in a measurement assurance program conducted by the HPS and NIST. K • S also certifies that the calibration was performed using quality policies, methods and procedures that meet or exceed the requirements of ISO/IEC 17025:2005.

This laboratory is accredited by the American Association for Laboratory Accreditation (A2LA) and the results shown in this report have been determined in accordance with the laboratory's terms of accreditation unless stated otherwise in this report

The CALIBRATION COEFFICIENTS stated herein are valid under the conditions specified. It is the instrument user's responsibility to perform the appropriate constancy tests prior to shipment and after return from calibration. It is also the responsibility of the user to assure that the interpretation of the information in this report is consistent with that intended by K • S Associates, Inc.

This report may not be reproduced except in full without the written permission of K• S Associates, Inc.

K&S Associates, Inc
Nashville, Tennessee 37210-3718

ACCREDITED

CALIBRATION CERTIFICATE

Calibration Date: 6/27/2016 Report Number: 161866 Test Number: M161588

K&S certifies that the environmental radiation monitor identified below has been calibrated for radiation measurement using collimated radiation sources whose output has been calibrated with instruments calibrated by or directly traceable to the National Institute of Standards and Technology. K&S is accredited by the American Association for Laboratory Accreditation to perform environmental level calibrations and further certifies that the calibration was performed using accredited policies and procedures (SI 25) that meet or exceed the requirements of ISO/IEC 17025:2005.

Sensor Type: 100 mR/h

Serial Number: 07J00KM1

Average Calibration Coefficient for the range of 0.012 mR/h – 0.220 mR/h*:
1.02 mR/"mR" reading
(Measured at 4 points)

Calibration Coefficient for the 50.0 mR/h point*:
1.12 mR/"mR" reading

Calibration Coefficient for the 80.0 mR/h point*:
1.10 mR/"mR" reading

Found RAC: 2.169e-8

*Multiply the reading in **mR/h** by the Calibration Coefficient to obtain true **mR/h**.

Calibrated By: Richard Harrison Reviewed By: Angela Roper

Richard Harrison
Calibration Technician

Title: Calibration Technician Title: Calibration Physicist

Log: M-53 Page: 73

K&S Associates, Inc
Nashville, Tennessee 37210-3718

ACCREDITED
CALIBRATION CERT # 886.01

AS FOUND DATA
Reuter-Stokes Chamber Calibration

June 27, 2016 *Test Number* *M161588*

CHAMBER:

Mfgr: Reuter Stokes
Model: RSS-131
Serial: 07J00KM1

SUBMITTED BY:

ERG

Albuquerque, NM

ORIENTATION/CONDITIONS:

Serial number away from source

"True" background exposure rate of 6.7 uR/h, instrument reading was 0.0076 mR/h

ATMOSPHERIC COMMUNICATION: SEALED

POLARIZING POTENTIAL 401V

LEAKAGE: negligible

BEAM QUALITY				CALIBRATION		
BEAM		**EXPOSURE RATE**		**COEFFICIENT**	**UNCERT**	**LOG**
CsEn220	(11mCi)	0.22mR/h	N_x=	1.00 mR/h/rdg	11%	M-53 73
CsEn80	(11mCi)	0.08mR/h	N_x=	1.03 mR/h/rdg	11%	
CsEnv12	(1mCi)	0.012mR/h	N_x=	1.01 mR/h/rdg	11%	
CsEnv15	(1mCi)	0.015mR/h	N_x=	1.02 mR/h/rdg	11%	
Cs199m	(20 Ci)	50mR/h	N_x=	1.12 mR/h/rdg	8%	
Cs252m	(20 Ci)	80mR/h	N_x=	1.10 mR/h/rdg	8%	

Comments Batt: 6.1V, Temp: 24.6 deg C. K&S Environment: Temp:21 deg C , RH 59%, Press: 752 mmHg;
Report Number: 161866
Refer to Appendix I of this report for details on PIC ionization chamber calibrations. Procedure: SI 25
RAC Found: 2.169e-8

Calibrated By Richard Hardison **Reviewed By:**
Title: Calibration Technician **Title:** Calibration Physicist
Checked By: **Prepared By:** REH

Form RSS

ERG

Single-Channel Function Check Log

Environmental Restoration Group, Inc.
8809 Washington St. NE, Suite 150
Albuquerque, NM 87113
(505) 298-4224

METER	
Manufacturer:	Ludlum
Model:	2221
Serial No.:	254772
Cal. Due Date:	7-19-17

DETECTOR	
Manufacturer:	Ludlum
Model:	44-10
Serial No.:	PR303727
Cal. Due Date:	7-19-17

Comments:
NNERT

Source: Cs-137 Activity: 5.12 uCi Source Date: 6-16-94 Distance to Source: 6 inches

Serial No.: 333-94 Emission Rate: NA cpm/emissions

Date	Time	Battery	High Voltage	Threshhold	Source Counts	BKG Counts	Net Counts	Initials	Note(s): Project Reference Point,
9-27-16	1126	6.1	1002	99	45988	6844	39144	NW	NA-0904
9-27-16	1619	5.9	997	99	44136	6788	37348	NW	NA-0904
9-28-16	1022	5.9	1001	99	44612	6242	38370	NW	Comfort Suites Parking lot
9-28-16	1754	5.9	1000	99	43583	6742	36841	NW	NA-0928
9-29-16	0936	5.9	1001	100	44695	5574	39121	NW	Comfort Suites Parking Lot
9-29-16	1600	5.8	1002	99	46024	6760	39264	NW	NA-0928
9-30-16	0920	5.8	1002	99	44958	5748	39210	NW	NA-0904
9-30-16	1436	5.7	998	99	44138	6240	37898	NW	NA-0504
10-1-16	0913	5.7	1002	100	43656	5047	38609	NW	Oak 124/125
10-1-16	1605	5.6	995	99	43105	6275	36830	NW	Alonzo
10-3-16	0950	5.7	1001	99	44914	5611	39303	NW	Barton 3
10-3-16	1220	5.6	998	99	45823	5620	40105	NW	Barton 3

Reviewed by: [signature] Review Date: 11-29-16

ERG

Single-Channel Function Check Log

Environmental Restoration Group, Inc.
8809 Washington St. NE, Suite 150
Albuquerque, NM 87113
(505) 298-4224

METER	
Manufacturer:	Ludlum
Model:	44-10
Serial No.:	196086
Cal. Due Date:	7-9-17

DETECTOR	
Manufacturer:	Ludlum
Model:	2221
Serial No.:	PR295014
Cal. Due Date:	7-9-17

Comments:
NNGRT

Source: Cs-137 Activity: 5.12 uCi Source Date: 6-16-94 Distance to Source: 6 Inches

Serial No.: 333-94 Emission Rate: NA cpm/emissions

Date	Time	Battery	High Voltage	Threshhold	Source Counts	BKG Counts	Net Counts	Initials	Note(s): Project Reference Points
9-27-16	1121	5.7	1100	100	45851	6762	39089	NW	NA-0904
9-27-16	1619	5.6	1094	99	45492	6313	39179	NW	NA-0904
9-28-16	1026	5.7	1100	100	44929	6287	38642	NW	NA-0904
9-28-16	1754	5.6	1098	100	44643	6434	38209	NW	Comfort Suites Parking Lot
9-29-16	0940	5.6	1100	99	43453	5654	37799	NW	NA-0928
9-29-16	1603	5.5	1101	100	44586	6525	38061	NW	Comfort Suites Parking Lot
9-30-16	0915	5.5	1102	100	44975	5236	39739	NW	NA-0928
9-30-16	1433	5.4	1096	100	44003	5827	38176	NW	NA-0904
10-1-16	0925	5.5	1102	100	42929	5140	37789	NW	Dock 124/125
10-1-16	1605	5.3	1092	100	44650	6271	38379	NW	Alonzo
10-3-16	0946	5.5	1100	100	43679	4995	38684	NW	Barton 3
10-3-16	1225	5.4	1099	100	45921	5361	40560	NW	Barton 3

Reviewed by: MA Review Date: 11/29/16

ERG

Single-Channel Function Check Log

Environmental Restoration Group, Inc.
8809 Washington St. NE, Suite 150
Albuquerque, NM 87113
(505) 298-4224

METER	
Manufacturer:	Ludlum
Model:	2221
Serial No.:	254772
Cal. Due Date:	7-19-17

DETECTOR	
Manufacturer:	Ludlum
Model:	44-10
Serial No.:	PR303727
Cal. Due Date:	7-19-17

Comments:
NNERT

Source: Cs-137 Activity: 5.12 uCi Source Date: 6-6-94 Distance to Source: 6 Inches

Serial No.: 333-94 Emission Rate: NA cpm/emissions

Date	Time	Battery	High Voltage	Threshhold	Source Counts	BKG Counts	Net Counts	Initials	Note(s): Project reference points
10-11-16	0927	5.5	1002	99	45999	6141	39858	NW	NA-0904
10-11-16	1720	5.5	998	99	48630	6576	42054	NW	Comfort Suites Parking Lot
10-12-16	0858	5.5	1003	99	44780	5306	39474	NW	NA-0928
10-12-16	1618	5.5	998	99	43779	6289	37490	NW	Comfort Suites Parking Lot
10-13-16	0911	5.5	1003	99	46726	7375	39351	NW	Alonzo
10-13-16	1910	5.5	990	99	45235	6618	38617	NW	Comfort Suites Parking Lot
10-14-16	0926	5.5	1004	99	45657	7242	38415	NW	Barton 3
10-14-16	1540	5.4	998	99	44751	6480	38271	NW	Comfort Suites Parking Lot
10-15-16	0927	5.5	1001	99	45697	6933	38764	NW	Henry Blackwater
10-15-16	1324	5.4	996	99	42528	4945	37583	NW	Hat Rock Inn Parking Lot
a 10-24-16	0800	6.2	1005	100	48507	9268	39239	NW	Boyd Tisi
10-24-16	1207	6.0	1001	99	46290	8126	38164	NW	Boyd Tisi

a. Changed battery

Reviewed by: MM Review Date: 11/29/16

(2)

ERG

Single-Channel Function Check Log

Environmental Restoration Group, Inc.
8809 Washington St. NE, Suite 150
Albuquerque, NM 87113
(505) 298-4224

METER	
Manufacturer:	Ludlum
Model:	44-10
Serial No.:	196086
Cal. Due Date:	7-9-17

DETECTOR	
Manufacturer:	Ludlum
Model:	2221
Serial No.:	PR 285014
Cal. Due Date:	7-9-17

Comments:
NNERS

Source: Cs-137 Activity: 5.12 uCi Source Date: 6-16-94 Distance to Source: 6 Inches

Serial No.: 333-54 Emission Rate: NA cpm/emissions

Date	Time	Battery	High Voltage	Threshhold	Source Counts	BKG Counts	Net Counts	Initials	Note(s): Project Reference Points
10-4-16	0936	5.5	1102	100	46804	6042	40762	NW	Tsosie 1
10-4-16	1720	5.4	1106	100	46032	6898	39134	NW	Comfort Suites Parking Lot
10-5-16	0622	5.4	1109	101	45794	6834	38960	NW	Comfort Suites Parking Lot
10-5-16	1348	5.3	1097	99	46608	6021	40587	NW	Tsosie 1
10-6-16	0904	5.4	1103	100	44521	6273	38248	NW	Comfort Suites Parking Lot
10-6-16	1718	5.3	1099	100	45178	6311	38867	NW	Comfort Suites Parking Lot
10-7-16	0859	5.4	1104	100	44101	5226	38875	NW	Oak 124/125
10-7-16	1633	5.4	1098	99	44930	6832	38098	NW	Comfort Suites Parking Lot
10-8-16	0908	5.4	1104	100	45110	6201	38909	NW	Red Valley Intersection
10-8-16	1658	5.3	1098	99	45810	6196	39614	NW	Comfort Suites Parking Lot
10-12-16	1331	5.4	1099	99	46496	6519	39977	NW	Barton 3
10-12-16	1614	5.4	1097	100	44509	6060	38449	NW	Comfort Suites Parking Lot

Reviewed by: MM Review Date: 11/29/16

ERG

Single-Channel Function Check Log

Environmental Restoration Group, Inc
8809 Washington St. NE, Suite 150
Albuquerque, NM 87113
(505)298-4224

METER	
Manufacturer:	Ludlum
Model:	2221
Serial No.:	282971
Cal. Due Date:	3-13-18

DETECTOR	
Manufacturer:	Ludlum
Model:	44-10
Serial No.:	PR320678
Cal. Due Date:	3-13-18

Comments:
NNEAF

Source: Cs-137 Activity: 4 uCi Source Date: 4-18-96 Distance to Source: 6 inches

Serial No.: 544-96 Emission Rate: NA cpm/emissions

Date	Time	Battery	High Voltage	Threshhold	Source Counts	BKG Counts	Net Counts	Initials	Note(s):
4-17-17	1312	5.9	1044	100	38292	6004	32268	NW	Barton 3
4-18-17	1356	5.9	1049	100	41042	8945	32097	NW	Claim 28
4-18-17	1636	5.8	1047	100	40713	9418	31295	NW	Claim 28
4-19-17	0821	5.9	1049	101	40983	9954	31029	NW	Claim 28
4-19-17	1350	5.7	1047	100	40955	9152	31803	NW	Claim 28
4-20-17	0919	5.9	1051	100	41485	9593	31892	NW	Claim 28
4-20-17	1515	5.7	1046	100	40970	9549	31421	NW	Claim 28

4-24-17

Reviewed by: MM Review Date: 10/9/17

ERG

Single-Channel Function Check Log

Environmental Restoration Group, Inc
8809 Washington St. NE Suite 150
Albuquerque, NM 87113
(505) 298-4224

METER	
Manufacturer:	Ludlum
Model:	2221
Serial No.:	196086
Cal. Due Date:	2-28-17

DETECTOR	
Manufacturer:	Ludlum
Model:	44-10
Serial No.:	PR 295019
Cal. Due Date:	2-28-17

Comments:
NNERT

Source: Cs - 137 Activity: 4 uCi Source Date: 4-18-96 Distance to Source: 6 inches

Serial No.: 544-96 Emission Rate: ND cpm/emissions

Date	Time	Battery	High Voltage	Threshhold	Source Counts	BKG Counts	Net Counts	Initials	Note(s):
4-11-17	0932	5.5	1100	100	36776	5404		NW	NA-0928
4-11-17	1601	5.4	1094	100	36796	5031		NW	NA-0904 (upper)
4-12-17	0850	5.4	1100	101	37067	5050		NW	NA-0928
4-12-17	1510	5.3	1092	100	36453	5524		NW	NA-0904
4-13-17	0855	5.4	1101	101	36895	5793		NW	NA-0928
4-13-17	1648	5.3	1092	100	38816	5572		NW	NA-0904
4-15-17	0840	5.4	1100	101	37457	5291		NW	NA-0928
4-15-17	1612	5.2	1090	100	38092	6045		NW	Barton 3
4-17-17	0921	5.4	1101	101	38591	5561		NW	NA-0928
4-17-17	1317	5.3	1090	100	37050	5496		NW	Barton 3
4-18-17	1354	5.4	1098	101	40983	8497		NW	Claim 28
4-18-17	1642	5.2	1091	101	39900	8193		NW	Claim 28

Reviewed by: MM Review Date: 10/9/17

ERG

Single-Channel Function Check Log

Environmental Restoration Group, Inc
8809 Washington St. NE, Suite 150
Albuquerque, NM 87113
(505) 298-4224

METER	
Manufacturer:	Ludlum
Model:	2221
Serial No.:	254772
Cal. Due Date:	2-28-18

DETECTOR	
Manufacturer:	Ludlum
Model:	44-10
Serial No.:	PR303727
Cal. Due Date:	2-28-18

Comments:
NNERT -Drilling

Source: Cs-137 Activity: 4 uCi Source Date: 4-12-96 Distance to Source: 6 inches

Serial No.: 544-96 Emission Rate: NA cpm/emissions

Date	Time	Battery	High Voltage	Threshhold	Source Counts	BKG Counts	Net Counts	Initials	Note(s):
6-3-17	1008	5.4	997	99	38275	5551	32724	NW	NA-0928
6-3-17	1639	5.4	988	100	37983	5104	32879	NW	NA-0928
6-4-17	0840	5.4	997	100	38039	6284	31755	NW	NA-0928
6-4-17	1750	5.4	988	100	37818	6259	31559	NW	Home2 Suites lot
6-5-17	0840	5.4	995	99	35592	5885	29707	NW	NA-0928
6-5-17	1508	—	—	DID	NOT USE	—	—	NW	—
6-6-17	1105	5.3	989	100	37170	5887	31283	NW	Barton 3
6-6-17	1420	5.3	987	99	36952	6129	30823	NW	Barton 3
6-7-17	0903	5.4	996	100	38449	6477	31972	NW	Home2 Suites lot
6-7-17	1822	5.4	990	100	37233	6707	30526	NW	Barton 3
6-9-17	0949	5.4	994	100	36465	5687	30778	NW	Section 26
6-9-17	1640	5.4	984	99	36408	5695	30713	NW	Section 26

Reviewed by: Michael [illegible] Review Date: 11/06/17

ERG

Single-Channel Function Check Log

Environmental Restoration Group, Inc
8809 Washington St. NE, Suite 150
Albuquerque, NM 87113
(505) 298-4224

METER	
Manufacturer:	Ludlum
Model:	2221
Serial No.:	254757
Cal. Due Date:	~~8-21-18~~ NW 7-25-18

DETECTOR	
Manufacturer:	Ludlum
Model:	44-10
Serial No.:	PR292690
Cal. Due Date:	8-21-18

Comments:
NNERT

Source: Cs-137 Activity: 4 uCi Source Date: 4-18-96 Distance to Source: 6 inches

Serial No.: 544-96 Emission Rate: NA cpm/emissions

Date	Time	Battery	High Voltage	Threshhold	Source Counts	BKG Counts	Net Counts	Initials	Note(s):
9-12-17	0930	5.8	1003	114	37751	6287	31464	NW	Barton 3
9-12-17	1433	5.8	1003	111	37908	6408	31500	NW	Tsosie 1
9-13-17	0914	5.8	1007	110	37894	6629	31265	NW	Alonzo
9-13-17	1603	5.7	993	101	36184	5750	30434	NW	Barton 3
9-14-17	0903	5.8	1000	102	37308	6025	31283	NW	NA-0904
9-14-17	1250	5.8	996	102	36293	6018	30275	NW	NA-0904
9-15-17	0925	5.8	1002	104	35475	5289	30186	NW	Eunice Becenti
9-15-17	1725	5.8	999	105	36724	4764	31960	NW	Eunice Becenti
9-16-17	0908	5.8	1005	104	36645	5582	31063	NW	Eunice Becenti
9-16-17	1238	5.7	1001	106	37099	5588	31511	NW	Eunice Becenti @ asphalt road

Reviewed by: MM Review Date: 10/4/17

ERG

Single-Channel Function Check Log

Environmental Restoration Group, Inc.
8809 Washington St. NE, Suite 150
Albuquerque, NM 87113
(505) 298-4224

METER	
Manufacturer:	Ludlum
Model:	2221
Serial No.:	138368
Cal. Due Date:	9-7-18

DETECTOR	
Manufacturer:	Ludlum
Model:	44-10
Serial No.:	PR355763
Cal. Due Date:	9-7-18

Comments:
NNERT

Source: Cs-137 Activity: 4 uCi Source Date: 4-18-96 Distance to Source: 6 inches

Serial No.: 544-96 Emission Rate: NA cpm/emissions

Date	Time	Battery	High Voltage	Threshhold	Source Counts	BKG Counts	Net Counts	Initials	Note(s):
9-12-17	0914	5.4	950	101	36935	6331	30604	NW	Barton 3
9-12-17	1432	5.3	944	99	38043	6468	31575	NW	Tsosie 1
9-13-17	0906	5.4	951	99	37146	6538	30608	NW	Alonzo
9-13-17	1600	5.3	944	99	35587	5991	29596	NW	Barton 3
9-14-17	0909	5.4	950	100	36080	6176	29904	NW	NA-0404
9-14-17	1255	5.3	948	100	36099	5764	30335	NW	NA-0404
9-15-17	0920	5.4	954	101	35208	5551	29657	NW	Eunice Begaye
9-15-17	1729	5.3	957	109	35937	5261	30676	NW	Eunice Begaye
9-19-17	0831	5.4	958	105	36467	6034	30433	NW	Section 26 @ trailer
9-19-17	1453	5.3	946	99	44454	14748	29706	NW	Section 26 @ corral
9-20-17	0736	5.3	953	102	37676	6987	30689	NW	Mexican Hat
9-20-17	1611	5.2	947	100	36842	6252	30590	NW	Mexican Hat

Reviewed by: MM Review Date: 10/9/17

ERG

Single-Channel Function Check Log

Environmental Restoration Group, Inc.
8809 Washington St. NE, Suite 150
Albuquerque, NM 87113
(505) 298-4224

METER	
Manufacturer:	GE
Model:	RSS-131
Serial No.:	07300km1
Cal. Due Date:	6-29-17

DETECTOR	
Manufacturer:	SAME AS METER
Model:	
Serial No.:	
Cal. Due Date:	

Comments:
NNERT

Source: Cs-137 Activity: 5.12 uCi Source Date: 6-16-94 Distance to Source: Contact - housing

Serial No.: 333-94 Emission Rate: NA cpm/emissions

Date	Time	Battery	High Voltage	Threshhold	Source Counts (mR/h)	BKG Counts	Net Counts	Initials	Note(s): Project reference points
10-7-16	0545	~6.16	~400	~NA~	~26.7	~9.5	~17.2	NW	Comfort Suites Room - Farmington
10-7-16	2040	~6.16	~400	NA	~26.5	~8.7	~17.8	NW	Comfort Suites Room - Farmington
10-11-16	0634	~6.2	~400	NA	~25	~10.5	~14.5	NW	Comfort Suites Room - Farmington
10-11-16	1801	~6.3	~400	NA	~25.5	~10.1	~14.4	NW	Comfort Suites Room - Farmington
10-12-16	0548	~6.3	~400	NA	~26.5	~10	~16.5	NW	Comfort Suites Room - Farmington
10-12-16	1640	~6.3	~400	NA	~26.4	~10	~16.4	NW	Comfort Suites Room - Farmington
10-13-16	0608	~6.3	~400	NA	~27	~9.8	~17.2	NW	Comfort Suites Room - Farmington
10-13-16	1950	~6.3	~400	NA	~26.3	~9.5	~16.8	NW	Comfort Suites Room - Farmington
10-14-16	0630	~6.4	~400	NA	~26.4	~9.5	~16.4	NW	Comfort Suites Room - Farmington
10-14-16	1547	~6.2	~400	NA	~30	~12	~18	NW	Comfort Suites Room - Farmington
10-25-16	0539	~6.3	~400	NA	~29	~11	~18	NW	Best Western Room - Flagstaff
10-25-16	1255				DID NOT USE				

Reviewed by: MM Review Date: 11-29-16

Appendix B Exposure Rate Measurements

Date and Time	Exposure Rate (mR/h)	Location
10/14/2016 10:11	0.0532	Correlation Location 1
10/14/2016 10:11	0.0923	Correlation Location 1
10/14/2016 10:11	0.0795	Correlation Location 1
10/14/2016 10:11	0.0534	Correlation Location 1
10/14/2016 10:11	0.0339	Correlation Location 1
10/14/2016 10:12	0.0223	Correlation Location 1
10/14/2016 10:12	0.0165	Correlation Location 1
10/14/2016 10:12	0.0135	Correlation Location 1
10/14/2016 10:12	0.0122	Correlation Location 1
10/14/2016 10:12	0.0116	Correlation Location 1
10/14/2016 10:12	0.0111	Correlation Location 1
10/14/2016 10:12	0.0108	Correlation Location 1
10/14/2016 10:12	0.0106	Correlation Location 1
10/14/2016 10:12	0.0104	Correlation Location 1
10/14/2016 10:12	0.0104	Correlation Location 1
10/14/2016 10:13	0.0103	Correlation Location 1
10/14/2016 10:13	0.0103	Correlation Location 1
10/14/2016 10:13	0.0103	Correlation Location 1
10/14/2016 10:13	0.0105	Correlation Location 1
10/14/2016 10:13	0.0108	Correlation Location 1
10/14/2016 10:13	0.0105	Correlation Location 1
10/14/2016 10:13	0.0102	Correlation Location 1
10/14/2016 10:13	0.0103	Correlation Location 1
10/14/2016 10:13	0.0103	Correlation Location 1
10/14/2016 10:13	0.01	Correlation Location 1
10/14/2016 10:14	0.0103	Correlation Location 1
10/14/2016 10:14	0.0104	Correlation Location 1
10/14/2016 10:14	0.0104	Correlation Location 1
10/14/2016 10:14	0.0102	Correlation Location 1
10/14/2016 10:14	0.0099	Correlation Location 1
10/14/2016 10:14	0.01	Correlation Location 1
10/14/2016 10:14	0.0104	Correlation Location 1
10/14/2016 10:14	0.0108	Correlation Location 1
10/14/2016 10:14	0.0106	Correlation Location 1
10/14/2016 10:14	0.0108	Correlation Location 1
10/14/2016 10:15	0.0108	Correlation Location 1
10/14/2016 10:15	0.0106	Correlation Location 1
10/14/2016 10:15	0.0105	Correlation Location 1
10/14/2016 10:15	0.01	Correlation Location 1
10/14/2016 10:15	0.01	Correlation Location 1
10/14/2016 10:15	0.0104	Correlation Location 1
10/14/2016 10:15	0.0104	Correlation Location 1
10/14/2016 10:15	0.0105	Correlation Location 1
10/14/2016 10:15	0.0111	Correlation Location 1
10/14/2016 10:15	0.0117	Correlation Location 1
10/14/2016 10:16	0.0116	Correlation Location 1
10/14/2016 10:16	0.0116	Correlation Location 1
10/14/2016 10:16	0.0114	Correlation Location 1
10/14/2016 10:16	0.0109	Correlation Location 1
10/14/2016 10:16	0.0111	Correlation Location 1
10/14/2016 10:16	0.0117	Correlation Location 1
10/14/2016 10:16	0.0117	Correlation Location 1
10/14/2016 10:16	0.0114	Correlation Location 1
10/14/2016 10:16	0.0109	Correlation Location 1
10/14/2016 10:16	0.011	Correlation Location 1
10/14/2016 10:17	0.011	Correlation Location 1
10/14/2016 10:17	0.0109	Correlation Location 1

Date and Time	Exposure Rate (mR/h)	Location
10/14/2016 10:17	0.0109	Correlation Location 1
10/14/2016 10:17	0.0106	Correlation Location 1
10/14/2016 10:17	0.0108	Correlation Location 1
10/14/2016 10:17	0.0105	Correlation Location 1
10/14/2016 10:17	0.0105	Correlation Location 1
10/14/2016 10:17	0.0105	Correlation Location 1
10/14/2016 10:17	0.0106	Correlation Location 1
10/14/2016 10:17	0.0105	Correlation Location 1
10/14/2016 10:18	0.0104	Correlation Location 1
10/14/2016 10:18	0.0108	Correlation Location 1
10/14/2016 10:18	0.0109	Correlation Location 1
10/14/2016 10:18	0.011	Correlation Location 1
10/14/2016 10:18	0.0106	Correlation Location 1
10/14/2016 10:18	0.0105	Correlation Location 1
10/14/2016 10:18	0.0106	Correlation Location 1
10/14/2016 10:18	0.0108	Correlation Location 1
10/14/2016 10:18	0.0109	Correlation Location 1
10/14/2016 10:18	0.0111	Correlation Location 1
10/14/2016 10:19	0.0111	Correlation Location 1
10/14/2016 10:19	0.0111	Correlation Location 1
10/14/2016 10:19	0.011	Correlation Location 1
10/14/2016 10:19	0.0103	Correlation Location 1
10/14/2016 10:19	0.01	Correlation Location 1
10/14/2016 10:19	0.0104	Correlation Location 1
10/14/2016 10:19	0.0104	Correlation Location 1
10/14/2016 10:19	0.0102	Correlation Location 1
10/14/2016 10:19	0.0102	Correlation Location 1
10/14/2016 10:19	0.0104	Correlation Location 1
10/14/2016 10:20	0.0106	Correlation Location 1
10/14/2016 10:20	0.0109	Correlation Location 1
10/14/2016 10:20	0.0106	Correlation Location 1
10/14/2016 10:20	0.0105	Correlation Location 1
10/14/2016 10:20	0.0104	Correlation Location 1
10/14/2016 10:20	0.0104	Correlation Location 1
10/14/2016 10:20	0.0105	Correlation Location 1
10/14/2016 10:20	0.0104	Correlation Location 1
10/14/2016 10:20	0.0106	Correlation Location 1
10/14/2016 10:20	0.0109	Correlation Location 1
10/14/2016 10:21	0.0109	Correlation Location 1
10/14/2016 10:21	0.011	Correlation Location 1
10/14/2016 10:21	0.011	Correlation Location 1
10/14/2016 10:21	0.0108	Correlation Location 1
10/14/2016 10:21	0.0105	Correlation Location 1
10/14/2016 10:21	0.0105	Correlation Location 1
10/14/2016 10:21	0.011	Correlation Location 1
10/14/2016 10:21	0.0108	Correlation Location 1
10/14/2016 10:21	0.0105	Correlation Location 1
10/14/2016 10:21	0.0105	Correlation Location 1
10/14/2016 10:22	0.0105	Correlation Location 1
10/14/2016 10:22	0.0104	Correlation Location 1
10/14/2016 10:22	0.0103	Correlation Location 1
10/14/2016 10:22	0.01	Correlation Location 1
10/14/2016 10:22	0.0103	Correlation Location 1
10/14/2016 10:22	0.0106	Correlation Location 1
10/14/2016 10:22	0.0109	Correlation Location 1
10/14/2016 10:22	0.0112	Correlation Location 1
10/14/2016 10:22	0.0117	Correlation Location 1

Barton 3 Exposure Rate Measurements for Correlation

Date and Time	Exposure Rate (mR/h)	Location
10/14/2016 10:45	0.0547	Correlation Location 2
10/14/2016 10:45	0.0969	Correlation Location 2
10/14/2016 10:45	0.0867	Correlation Location 2
10/14/2016 10:45	0.0618	Correlation Location 2
10/14/2016 10:45	0.0434	Correlation Location 2
10/14/2016 10:45	0.032	Correlation Location 2
10/14/2016 10:45	0.0254	Correlation Location 2
10/14/2016 10:45	0.0218	Correlation Location 2
10/14/2016 10:45	0.0199	Correlation Location 2
10/14/2016 10:45	0.019	Correlation Location 2
10/14/2016 10:46	0.0186	Correlation Location 2
10/14/2016 10:46	0.0182	Correlation Location 2
10/14/2016 10:46	0.0187	Correlation Location 2
10/14/2016 10:46	0.0192	Correlation Location 2
10/14/2016 10:46	0.0192	Correlation Location 2
10/14/2016 10:46	0.019	Correlation Location 2
10/14/2016 10:46	0.0188	Correlation Location 2
10/14/2016 10:46	0.0187	Correlation Location 2
10/14/2016 10:46	0.0187	Correlation Location 2
10/14/2016 10:46	0.0186	Correlation Location 2
10/14/2016 10:47	0.0189	Correlation Location 2
10/14/2016 10:47	0.0192	Correlation Location 2
10/14/2016 10:47	0.0194	Correlation Location 2
10/14/2016 10:47	0.0194	Correlation Location 2
10/14/2016 10:47	0.0189	Correlation Location 2
10/14/2016 10:47	0.0187	Correlation Location 2
10/14/2016 10:47	0.019	Correlation Location 2
10/14/2016 10:47	0.0187	Correlation Location 2
10/14/2016 10:47	0.0187	Correlation Location 2
10/14/2016 10:47	0.0192	Correlation Location 2
10/14/2016 10:48	0.019	Correlation Location 2
10/14/2016 10:48	0.0188	Correlation Location 2
10/14/2016 10:48	0.0188	Correlation Location 2
10/14/2016 10:48	0.019	Correlation Location 2
10/14/2016 10:48	0.0192	Correlation Location 2
10/14/2016 10:48	0.0188	Correlation Location 2
10/14/2016 10:48	0.0184	Correlation Location 2
10/14/2016 10:48	0.018	Correlation Location 2
10/14/2016 10:48	0.0185	Correlation Location 2
10/14/2016 10:48	0.0192	Correlation Location 2
10/14/2016 10:49	0.0194	Correlation Location 2
10/14/2016 10:49	0.0199	Correlation Location 2
10/14/2016 10:49	0.0199	Correlation Location 2
10/14/2016 10:49	0.0194	Correlation Location 2
10/14/2016 10:49	0.019	Correlation Location 2
10/14/2016 10:49	0.019	Correlation Location 2
10/14/2016 10:49	0.0188	Correlation Location 2
10/14/2016 10:49	0.0184	Correlation Location 2
10/14/2016 10:49	0.0182	Correlation Location 2
10/14/2016 10:49	0.0186	Correlation Location 2
10/14/2016 10:50	0.0184	Correlation Location 2
10/14/2016 10:50	0.0188	Correlation Location 2
10/14/2016 10:50	0.0189	Correlation Location 2
10/14/2016 10:50	0.0188	Correlation Location 2
10/14/2016 10:50	0.0186	Correlation Location 2
10/14/2016 10:50	0.0186	Correlation Location 2
10/14/2016 10:50	0.0185	Correlation Location 2
10/14/2016 10:50	0.0185	Correlation Location 2
10/14/2016 10:50	0.0182	Correlation Location 2
10/14/2016 10:50	0.0185	Correlation Location 2
10/14/2016 10:51	0.0187	Correlation Location 2
10/14/2016 10:51	0.0187	Correlation Location 2
10/14/2016 10:51	0.0186	Correlation Location 2
10/14/2016 10:51	0.0187	Correlation Location 2
10/14/2016 10:51	0.0187	Correlation Location 2
10/14/2016 10:51	0.0186	Correlation Location 2
10/14/2016 10:51	0.0187	Correlation Location 2
10/14/2016 10:51	0.019	Correlation Location 2
10/14/2016 10:51	0.019	Correlation Location 2
10/14/2016 10:51	0.0186	Correlation Location 2
10/14/2016 10:52	0.0184	Correlation Location 2
10/14/2016 10:52	0.0184	Correlation Location 2
10/14/2016 10:52	0.0187	Correlation Location 2
10/14/2016 10:52	0.0189	Correlation Location 2
10/14/2016 10:52	0.019	Correlation Location 2
10/14/2016 10:52	0.019	Correlation Location 2
10/14/2016 10:52	0.019	Correlation Location 2
10/14/2016 10:52	0.0192	Correlation Location 2
10/14/2016 10:52	0.0192	Correlation Location 2
10/14/2016 10:52	0.0192	Correlation Location 2
10/14/2016 10:53	0.019	Correlation Location 2
10/14/2016 10:53	0.0189	Correlation Location 2
10/14/2016 10:53	0.0188	Correlation Location 2
10/14/2016 10:53	0.0189	Correlation Location 2
10/14/2016 10:53	0.019	Correlation Location 2
10/14/2016 10:53	0.0192	Correlation Location 2
10/14/2016 10:53	0.019	Correlation Location 2
10/14/2016 10:53	0.0192	Correlation Location 2
10/14/2016 10:53	0.0188	Correlation Location 2
10/14/2016 10:53	0.0182	Correlation Location 2
10/14/2016 10:54	0.0182	Correlation Location 2
10/14/2016 10:54	0.0182	Correlation Location 2
10/14/2016 10:54	0.0184	Correlation Location 2
10/14/2016 10:54	0.0185	Correlation Location 2
10/14/2016 10:54	0.0188	Correlation Location 2
10/14/2016 10:54	0.0189	Correlation Location 2
10/14/2016 10:54	0.0188	Correlation Location 2
10/14/2016 10:54	0.0189	Correlation Location 2
10/14/2016 10:54	0.019	Correlation Location 2
10/14/2016 10:54	0.0192	Correlation Location 2
10/14/2016 10:55	0.0189	Correlation Location 2
10/14/2016 10:55	0.0185	Correlation Location 2
10/14/2016 10:55	0.0184	Correlation Location 2
10/14/2016 10:55	0.019	Correlation Location 2
10/14/2016 10:55	0.019	Correlation Location 2
10/14/2016 10:55	0.0192	Correlation Location 2
10/14/2016 10:55	0.0194	Correlation Location 2
10/14/2016 10:55	0.019	Correlation Location 2
10/14/2016 11:19	0.0556	Correlation Location 3
10/14/2016 11:19	0.0988	Correlation Location 3
10/14/2016 11:19	0.0895	Correlation Location 3
10/14/2016 11:19	0.0655	Correlation Location 3
10/14/2016 11:20	0.0474	Correlation Location 3
10/14/2016 11:20	0.036	Correlation Location 3

Barton 3 Exposure Rate Measurements for Correlation

Date and Time	Exposure Rate (mR/h)	Location
10/14/2016 11:20	0.0299	Correlation Location 3
10/14/2016 11:20	0.0272	Correlation Location 3
10/14/2016 11:20	0.0259	Correlation Location 3
10/14/2016 11:20	0.0247	Correlation Location 3
10/14/2016 11:20	0.0239	Correlation Location 3
10/14/2016 11:20	0.0235	Correlation Location 3
10/14/2016 11:20	0.0233	Correlation Location 3
10/14/2016 11:20	0.0231	Correlation Location 3
10/14/2016 11:21	0.0232	Correlation Location 3
10/14/2016 11:21	0.0233	Correlation Location 3
10/14/2016 11:21	0.0233	Correlation Location 3
10/14/2016 11:21	0.0231	Correlation Location 3
10/14/2016 11:21	0.0232	Correlation Location 3
10/14/2016 11:21	0.0232	Correlation Location 3
10/14/2016 11:21	0.0228	Correlation Location 3
10/14/2016 11:21	0.0223	Correlation Location 3
10/14/2016 11:21	0.0227	Correlation Location 3
10/14/2016 11:21	0.0231	Correlation Location 3
10/14/2016 11:22	0.0232	Correlation Location 3
10/14/2016 11:22	0.0232	Correlation Location 3
10/14/2016 11:22	0.0231	Correlation Location 3
10/14/2016 11:22	0.0231	Correlation Location 3
10/14/2016 11:22	0.0237	Correlation Location 3
10/14/2016 11:22	0.0241	Correlation Location 3
10/14/2016 11:22	0.0241	Correlation Location 3
10/14/2016 11:22	0.0235	Correlation Location 3
10/14/2016 11:22	0.0237	Correlation Location 3
10/14/2016 11:22	0.024	Correlation Location 3
10/14/2016 11:23	0.0242	Correlation Location 3
10/14/2016 11:23	0.0243	Correlation Location 3
10/14/2016 11:23	0.0239	Correlation Location 3
10/14/2016 11:23	0.0237	Correlation Location 3
10/14/2016 11:23	0.0234	Correlation Location 3
10/14/2016 11:23	0.0241	Correlation Location 3
10/14/2016 11:23	0.0244	Correlation Location 3
10/14/2016 11:23	0.0243	Correlation Location 3
10/14/2016 11:23	0.024	Correlation Location 3
10/14/2016 11:23	0.0237	Correlation Location 3
10/14/2016 11:24	0.0235	Correlation Location 3
10/14/2016 11:24	0.0232	Correlation Location 3
10/14/2016 11:24	0.0233	Correlation Location 3
10/14/2016 11:24	0.0237	Correlation Location 3
10/14/2016 11:24	0.0242	Correlation Location 3
10/14/2016 11:24	0.0239	Correlation Location 3
10/14/2016 11:24	0.0237	Correlation Location 3
10/14/2016 11:24	0.024	Correlation Location 3
10/14/2016 11:24	0.0239	Correlation Location 3
10/14/2016 11:24	0.0242	Correlation Location 3
10/14/2016 11:25	0.0241	Correlation Location 3
10/14/2016 11:25	0.0239	Correlation Location 3
10/14/2016 11:25	0.024	Correlation Location 3
10/14/2016 11:25	0.0241	Correlation Location 3
10/14/2016 11:25	0.0242	Correlation Location 3
10/14/2016 11:25	0.0247	Correlation Location 3
10/14/2016 11:25	0.0247	Correlation Location 3
10/14/2016 11:25	0.0243	Correlation Location 3
10/14/2016 11:25	0.0241	Correlation Location 3

Date and Time	Exposure Rate (mR/h)	Location
10/14/2016 11:25	0.0239	Correlation Location 3
10/14/2016 11:26	0.0237	Correlation Location 3
10/14/2016 11:26	0.0237	Correlation Location 3
10/14/2016 11:26	0.0235	Correlation Location 3
10/14/2016 11:26	0.0235	Correlation Location 3
10/14/2016 11:26	0.0234	Correlation Location 3
10/14/2016 11:26	0.0233	Correlation Location 3
10/14/2016 11:26	0.0234	Correlation Location 3
10/14/2016 11:26	0.0232	Correlation Location 3
10/14/2016 11:26	0.023	Correlation Location 3
10/14/2016 11:26	0.023	Correlation Location 3
10/14/2016 11:27	0.0227	Correlation Location 3
10/14/2016 11:27	0.0229	Correlation Location 3
10/14/2016 11:27	0.0228	Correlation Location 3
10/14/2016 11:27	0.0227	Correlation Location 3
10/14/2016 11:27	0.0225	Correlation Location 3
10/14/2016 11:27	0.0223	Correlation Location 3
10/14/2016 11:27	0.0222	Correlation Location 3
10/14/2016 11:27	0.0221	Correlation Location 3
10/14/2016 11:27	0.0225	Correlation Location 3
10/14/2016 11:27	0.0231	Correlation Location 3
10/14/2016 11:28	0.0235	Correlation Location 3
10/14/2016 11:28	0.0235	Correlation Location 3
10/14/2016 11:28	0.0235	Correlation Location 3
10/14/2016 11:28	0.0239	Correlation Location 3
10/14/2016 11:28	0.0237	Correlation Location 3
10/14/2016 11:28	0.023	Correlation Location 3
10/14/2016 11:28	0.023	Correlation Location 3
10/14/2016 11:28	0.0235	Correlation Location 3
10/14/2016 11:28	0.0234	Correlation Location 3
10/14/2016 11:28	0.0233	Correlation Location 3
10/14/2016 11:29	0.0237	Correlation Location 3
10/14/2016 11:29	0.0235	Correlation Location 3
10/14/2016 11:29	0.023	Correlation Location 3
10/14/2016 11:29	0.0227	Correlation Location 3
10/14/2016 11:29	0.0228	Correlation Location 3
10/14/2016 11:29	0.0227	Correlation Location 3
10/14/2016 11:29	0.0229	Correlation Location 3
10/14/2016 11:29	0.0232	Correlation Location 3
10/14/2016 11:29	0.0233	Correlation Location 3
10/14/2016 11:29	0.0233	Correlation Location 3
10/14/2016 11:30	0.0235	Correlation Location 3
10/14/2016 11:30	0.0237	Correlation Location 3
10/14/2016 11:30	0.0234	Correlation Location 3
10/14/2016 11:30	0.0233	Correlation Location 3
10/14/2016 11:30	0.0233	Correlation Location 3
10/14/2016 11:30	0.0227	Correlation Location 3
10/14/2016 11:30	0.0227	Correlation Location 3
10/14/2016 11:30	0.0228	Correlation Location 3
10/14/2016 11:30	0.0229	Correlation Location 3
10/14/2016 11:30	0.0228	Correlation Location 3
10/14/2016 11:49	0.0542	Correlation Location 4
10/14/2016 11:49	0.095	Correlation Location 4
10/14/2016 11:49	0.084	Correlation Location 4
10/14/2016 11:49	0.0586	Correlation Location 4
10/14/2016 11:49	0.0398	Correlation Location 4
10/14/2016 11:50	0.0286	Correlation Location 4

Barton 3 Exposure Rate Measurements for Correlation

Date and Time	Exposure Rate (mR/h)	Location
10/14/2016 11:50	0.0223	Correlation Location 4
10/14/2016 11:50	0.0189	Correlation Location 4
10/14/2016 11:50	0.0172	Correlation Location 4
10/14/2016 11:50	0.0163	Correlation Location 4
10/14/2016 11:50	0.016	Correlation Location 4
10/14/2016 11:50	0.0156	Correlation Location 4
10/14/2016 11:50	0.0156	Correlation Location 4
10/14/2016 11:50	0.0155	Correlation Location 4
10/14/2016 11:50	0.0156	Correlation Location 4
10/14/2016 11:51	0.0158	Correlation Location 4
10/14/2016 11:51	0.0158	Correlation Location 4
10/14/2016 11:51	0.0164	Correlation Location 4
10/14/2016 11:51	0.017	Correlation Location 4
10/14/2016 11:51	0.0172	Correlation Location 4
10/14/2016 11:51	0.0169	Correlation Location 4
10/14/2016 11:51	0.0162	Correlation Location 4
10/14/2016 11:51	0.0158	Correlation Location 4
10/14/2016 11:51	0.0155	Correlation Location 4
10/14/2016 11:51	0.0156	Correlation Location 4
10/14/2016 11:52	0.0158	Correlation Location 4
10/14/2016 11:52	0.0154	Correlation Location 4
10/14/2016 11:52	0.0154	Correlation Location 4
10/14/2016 11:52	0.0155	Correlation Location 4
10/14/2016 11:52	0.0155	Correlation Location 4
10/14/2016 11:52	0.0156	Correlation Location 4
10/14/2016 11:52	0.016	Correlation Location 4
10/14/2016 11:52	0.0158	Correlation Location 4
10/14/2016 11:52	0.0154	Correlation Location 4
10/14/2016 11:52	0.015	Correlation Location 4
10/14/2016 11:53	0.0147	Correlation Location 4
10/14/2016 11:53	0.0147	Correlation Location 4
10/14/2016 11:53	0.0152	Correlation Location 4
10/14/2016 11:53	0.0155	Correlation Location 4
10/14/2016 11:53	0.0154	Correlation Location 4
10/14/2016 11:53	0.0154	Correlation Location 4
10/14/2016 11:53	0.0154	Correlation Location 4
10/14/2016 11:53	0.0153	Correlation Location 4
10/14/2016 11:53	0.0152	Correlation Location 4
10/14/2016 11:53	0.0154	Correlation Location 4
10/14/2016 11:54	0.0156	Correlation Location 4
10/14/2016 11:54	0.016	Correlation Location 4
10/14/2016 11:54	0.0163	Correlation Location 4
10/14/2016 11:54	0.016	Correlation Location 4
10/14/2016 11:54	0.0156	Correlation Location 4
10/14/2016 11:54	0.0154	Correlation Location 4
10/14/2016 11:54	0.0154	Correlation Location 4
10/14/2016 11:54	0.0156	Correlation Location 4
10/14/2016 11:54	0.0158	Correlation Location 4
10/14/2016 11:54	0.016	Correlation Location 4
10/14/2016 11:55	0.016	Correlation Location 4
10/14/2016 11:55	0.016	Correlation Location 4
10/14/2016 11:55	0.0158	Correlation Location 4
10/14/2016 11:55	0.0158	Correlation Location 4
10/14/2016 11:55	0.0158	Correlation Location 4
10/14/2016 11:55	0.016	Correlation Location 4
10/14/2016 11:55	0.0156	Correlation Location 4
10/14/2016 11:55	0.0156	Correlation Location 4

Date and Time	Exposure Rate (mR/h)	Location
10/14/2016 11:55	0.0154	Correlation Location 4
10/14/2016 11:55	0.0153	Correlation Location 4
10/14/2016 11:56	0.0152	Correlation Location 4
10/14/2016 11:56	0.0151	Correlation Location 4
10/14/2016 11:56	0.0152	Correlation Location 4
10/14/2016 11:56	0.0158	Correlation Location 4
10/14/2016 11:56	0.0162	Correlation Location 4
10/14/2016 11:56	0.016	Correlation Location 4
10/14/2016 11:56	0.016	Correlation Location 4
10/14/2016 11:56	0.016	Correlation Location 4
10/14/2016 11:56	0.0156	Correlation Location 4
10/14/2016 11:56	0.0154	Correlation Location 4
10/14/2016 11:57	0.0152	Correlation Location 4
10/14/2016 11:57	0.0151	Correlation Location 4
10/14/2016 11:57	0.0152	Correlation Location 4
10/14/2016 11:57	0.0156	Correlation Location 4
10/14/2016 11:57	0.0161	Correlation Location 4
10/14/2016 11:57	0.0166	Correlation Location 4
10/14/2016 11:57	0.0167	Correlation Location 4
10/14/2016 11:57	0.0168	Correlation Location 4
10/14/2016 11:57	0.0165	Correlation Location 4
10/14/2016 11:57	0.0161	Correlation Location 4
10/14/2016 11:58	0.016	Correlation Location 4
10/14/2016 11:58	0.0161	Correlation Location 4
10/14/2016 11:58	0.0161	Correlation Location 4
10/14/2016 11:58	0.0158	Correlation Location 4
10/14/2016 11:58	0.0161	Correlation Location 4
10/14/2016 11:58	0.016	Correlation Location 4
10/14/2016 11:58	0.0156	Correlation Location 4
10/14/2016 11:58	0.0155	Correlation Location 4
10/14/2016 11:58	0.0151	Correlation Location 4
10/14/2016 11:58	0.0149	Correlation Location 4
10/14/2016 11:59	0.0148	Correlation Location 4
10/14/2016 11:59	0.0151	Correlation Location 4
10/14/2016 11:59	0.0152	Correlation Location 4
10/14/2016 11:59	0.0151	Correlation Location 4
10/14/2016 11:59	0.0149	Correlation Location 4
10/14/2016 11:59	0.015	Correlation Location 4
10/14/2016 11:59	0.0148	Correlation Location 4
10/14/2016 11:59	0.0152	Correlation Location 4
10/14/2016 11:59	0.015	Correlation Location 4
10/14/2016 11:59	0.015	Correlation Location 4
10/14/2016 12:00	0.0152	Correlation Location 4
10/14/2016 12:00	0.0154	Correlation Location 4
10/14/2016 12:00	0.0156	Correlation Location 4
10/14/2016 12:00	0.0152	Correlation Location 4
10/14/2016 12:00	0.015	Correlation Location 4
10/14/2016 12:13	0.0534	Correlation Location 5
10/14/2016 12:13	0.0934	Correlation Location 5
10/14/2016 12:13	0.082	Correlation Location 5
10/14/2016 12:13	0.0565	Correlation Location 5
10/14/2016 12:13	0.0373	Correlation Location 5
10/14/2016 12:13	0.0263	Correlation Location 5
10/14/2016 12:13	0.0202	Correlation Location 5
10/14/2016 12:13	0.017	Correlation Location 5
10/14/2016 12:13	0.0151	Correlation Location 5
10/14/2016 12:13	0.014	Correlation Location 5

Barton 3 Exposure Rate Measurements for Correlation

Date and Time	Exposure Rate (mR/h)	Location
10/14/2016 12:14	0.0133	Correlation Location 5
10/14/2016 12:14	0.0131	Correlation Location 5
10/14/2016 12:14	0.0128	Correlation Location 5
10/14/2016 12:14	0.0127	Correlation Location 5
10/14/2016 12:14	0.0124	Correlation Location 5
10/14/2016 12:14	0.0126	Correlation Location 5
10/14/2016 12:14	0.0129	Correlation Location 5
10/14/2016 12:14	0.0131	Correlation Location 5
10/14/2016 12:14	0.013	Correlation Location 5
10/14/2016 12:14	0.013	Correlation Location 5
10/14/2016 12:15	0.0129	Correlation Location 5
10/14/2016 12:15	0.0129	Correlation Location 5
10/14/2016 12:15	0.0133	Correlation Location 5
10/14/2016 12:15	0.0136	Correlation Location 5
10/14/2016 12:15	0.0134	Correlation Location 5
10/14/2016 12:15	0.0132	Correlation Location 5
10/14/2016 12:15	0.0134	Correlation Location 5
10/14/2016 12:15	0.0133	Correlation Location 5
10/14/2016 12:15	0.0132	Correlation Location 5
10/14/2016 12:15	0.0132	Correlation Location 5
10/14/2016 12:16	0.0131	Correlation Location 5
10/14/2016 12:16	0.0128	Correlation Location 5
10/14/2016 12:16	0.0124	Correlation Location 5
10/14/2016 12:16	0.0121	Correlation Location 5
10/14/2016 12:16	0.0118	Correlation Location 5
10/14/2016 12:16	0.0118	Correlation Location 5
10/14/2016 12:16	0.012	Correlation Location 5
10/14/2016 12:16	0.0122	Correlation Location 5
10/14/2016 12:16	0.0128	Correlation Location 5
10/14/2016 12:16	0.013	Correlation Location 5
10/14/2016 12:17	0.013	Correlation Location 5
10/14/2016 12:17	0.0132	Correlation Location 5
10/14/2016 12:17	0.0134	Correlation Location 5
10/14/2016 12:17	0.0136	Correlation Location 5
10/14/2016 12:17	0.014	Correlation Location 5
10/14/2016 12:17	0.0141	Correlation Location 5
10/14/2016 12:17	0.0138	Correlation Location 5
10/14/2016 12:17	0.0138	Correlation Location 5
10/14/2016 12:17	0.0134	Correlation Location 5
10/14/2016 12:17	0.0131	Correlation Location 5
10/14/2016 12:18	0.0128	Correlation Location 5
10/14/2016 12:18	0.0123	Correlation Location 5
10/14/2016 12:18	0.0123	Correlation Location 5
10/14/2016 12:18	0.0123	Correlation Location 5
10/14/2016 12:18	0.0122	Correlation Location 5
10/14/2016 12:18	0.0118	Correlation Location 5
10/14/2016 12:18	0.0118	Correlation Location 5
10/14/2016 12:18	0.0122	Correlation Location 5
10/14/2016 12:18	0.0123	Correlation Location 5
10/14/2016 12:18	0.0124	Correlation Location 5
10/14/2016 12:19	0.0123	Correlation Location 5
10/14/2016 12:19	0.0126	Correlation Location 5
10/14/2016 12:19	0.0134	Correlation Location 5
10/14/2016 12:19	0.0137	Correlation Location 5
10/14/2016 12:19	0.0135	Correlation Location 5
10/14/2016 12:19	0.0131	Correlation Location 5
10/14/2016 12:19	0.0127	Correlation Location 5
10/14/2016 12:19	0.0124	Correlation Location 5
10/14/2016 12:19	0.0124	Correlation Location 5
10/14/2016 12:19	0.0128	Correlation Location 5
10/14/2016 12:20	0.0132	Correlation Location 5
10/14/2016 12:20	0.0135	Correlation Location 5
10/14/2016 12:20	0.0134	Correlation Location 5
10/14/2016 12:20	0.013	Correlation Location 5
10/14/2016 12:20	0.013	Correlation Location 5
10/14/2016 12:20	0.0137	Correlation Location 5
10/14/2016 12:20	0.0139	Correlation Location 5
10/14/2016 12:20	0.0134	Correlation Location 5
10/14/2016 12:20	0.0134	Correlation Location 5
10/14/2016 12:20	0.0132	Correlation Location 5
10/14/2016 12:21	0.013	Correlation Location 5
10/14/2016 12:21	0.013	Correlation Location 5
10/14/2016 12:21	0.0129	Correlation Location 5
10/14/2016 12:21	0.0124	Correlation Location 5
10/14/2016 12:21	0.0127	Correlation Location 5
10/14/2016 12:21	0.0131	Correlation Location 5
10/14/2016 12:21	0.0133	Correlation Location 5
10/14/2016 12:21	0.0132	Correlation Location 5
10/14/2016 12:21	0.0129	Correlation Location 5
10/14/2016 12:21	0.0126	Correlation Location 5
10/14/2016 12:22	0.0122	Correlation Location 5
10/14/2016 12:22	0.012	Correlation Location 5
10/14/2016 12:22	0.012	Correlation Location 5
10/14/2016 12:22	0.0122	Correlation Location 5
10/14/2016 12:22	0.0126	Correlation Location 5
10/14/2016 12:22	0.0128	Correlation Location 5
10/14/2016 12:22	0.0132	Correlation Location 5
10/14/2016 12:22	0.0134	Correlation Location 5
10/14/2016 12:22	0.0135	Correlation Location 5
10/14/2016 12:22	0.0131	Correlation Location 5
10/14/2016 12:23	0.0128	Correlation Location 5
10/14/2016 12:23	0.0128	Correlation Location 5
10/14/2016 12:23	0.0124	Correlation Location 5
10/14/2016 12:23	0.0124	Correlation Location 5
10/14/2016 12:23	0.0126	Correlation Location 5
10/14/2016 12:23	0.0128	Correlation Location 5
10/14/2016 12:23	0.0128	Correlation Location 5
10/14/2016 12:23	0.0129	Correlation Location 5
10/14/2016 12:23	0.0127	Correlation Location 5
10/14/2016 12:23	0.0123	Correlation Location 5
10/14/2016 12:24	0.0123	Correlation Location 5
10/14/2016 12:24	0.0124	Correlation Location 5
10/14/2016 12:24	0.0126	Correlation Location 5

Barton 3 Exposure Rate Measurements for Correlation

Appendix C Technical Memo from ERG to Stantec. "Statistical Analysis of the Navajo Trustee Mines Dataset: Multivariate Linear Regression for Evaluation of Gamma Correlation with Ra-226 and Evaluation of Secular Equilibrium Between Ra-226 and Th-230".

Environmental Restoration Group, Inc.
8809 Washington St NE, Suite 150
Albuquerque, NM 87113

ph: (505) 298-4224
fax: (505) 797-1404
www.ERGoffice.com

Memo

To: Kirsty Woods, Program Director, Stantec

From: Liz Ruedig, PhD, CHP, and Mike Schierman, CHP, Environmental Restoration Group

Date: 7/31/2018

Re: Statistical Analysis of the Navajo Trustee Mines Dataset: Multivariate Linear Regression for Evaluation of Gamma Correlation with Ra-226 and Evaluation of Secular Equilibrium Between Ra-226 and Th-230

Multivariate Linear Regression for Evaluation of Gamma Count Rate with Ra-226 Concentrations in Surface Soil

Due to a large number of reviewer comments at the sixteen Navajo Trust Abandoned Uranium Mines (AUMs) concerning the influence of gamma-emitting radionuclides not within the uranium-238 decay series on the correlation between dynamic gamma count rate and soil concentration of radium-226, Environmental Restoration Group has performed multivariate linear regression (MLR), relating gamma count rate to multiple soil radionuclides simultaneously. MLR models the influence of a set of predictor variables (in this case, soil concentrations of several gamma-emitting radionuclides, or surrogates for these radionuclides) on a single response variable (in this case, dynamic gamma count rate), accounting for the influence of each predictor variable upon the response variable independently of the other predictor variables within the set.

In a MLR, it is possible to distinguish from a large set of variables the subset that significantly predicts a response variable. This is done by evaluating potential models on a number of criteria:

1. **The multi-collinearity of predictor variables.**

   Predictor variables that are linearly related to each other (i.e., variables y and x, where y may also be mathematically expressed as some multiple of x) produce a condition known as multicollinearity, where the matrix math used to solve the multivariate linear regression becomes irreducible. A physical example of multicollinearity occurs when modelling the influence of two radionuclides in equilibrium with each other (e.g., Th-230 and Ra-226) on a single response variable (e.g., gamma count rate). In order to compute a mathematical solution to the regression model, one of the multicollinear variables must be removed from the regression matrix. The multicollinear variables are identifiable by a large variance inflation factor (VIF), typically greater than 7, but in cases of near-perfect multicollinearity, often much greater than this value (e.g., > 100).

   It is also possible to identify multicollinear predictor variables by regressing two suspect variables upon each other. A high degree of correlation (i.e., $p < 0.05$ and high adjusted R^2) between the two variables suggests that the predictor variables are multicollinear, and that one variable should be eliminated from the multivariate regression prior to analysis.

2. **The p-value of predictor variables**

   For a variable to be considered a significant predictor of the response variable, the p-value of its slope (as calculated in an ANOVA table) must be significant (i.e., $p < 0.05$). In a MLR, the adjusted R^2 value for individual predictor variables is not indicative of overall model quality.

For the Navajo Trust AUMs there are three potential gamma-contributing radionuclides (defined as radionuclides that emit gamma radiation, or whose short-lived decay products emit gamma radiation) present in soil: thorium-232, radium-226 and, thorium-228. Thorium-230, which does not emit gamma radiation, was excluded as a potentially significant gamma-contributing radionuclide.

A MLR model: gamma = radium-226 + thorium-228 + thorium-232 was run for each AUM. For 15 of the 16 mines, thorium-232 and thorium-228 were multicollinear. On this basis, thorium-228 was excluded from the MLR. No multicollinearity was detected at Barton 3. However, none of the predictor variables was a significant predictor of gamma count rate ($p > 0.05$) for the complete model. As such, analysis for all 16 AUMs proceeded by removing thorium-228 from the set of predictor variables and running a new MLR model: gamma = radium-226 + thorium-232. None of the 16 models exhibited multicollinearity with the reduced model. After accounting for the effect of radium-226, thorium-232 was not a significant predictor of gamma count rate at any of the 16 AUMs. Radium-226 was a significant predictor ($p < 0.05$) of gamma count rate (after accounting for the influence of thorium-232 and thorium-228) at some of the AUMs (six of 16 AUMs).

Since neither predictor variable (thorium-232 or radium-226) was unambiguously a predictor in the MLR, two univariate regression models were performed as a final step: gamma = radium-226 and gamma = thorium-232. Thorium-232 was a significant predictor of gamma count rate ($p < 0.05$) only at Standing Rock, which is not unexpected given the geological conditions at this AUM. At all other sites, thorium-232 (and thorium-228 by association) were not significant predictors of gamma count rate ($p > 0.05$). By way of contrast, radium-226 was a significant predictor of the gamma count rate ($p < 0.05$) at 13 of the 16 AUMs. At three AUMs (Mitten, NA-0928, and Tsosie 1) none of the measured radionuclides significantly predicted the gamma count rate. Additionally, the adjusted R^2 values for the correlation models at the three AUMs, plus Claim 28, fail to meet the specified data quality objective (DQO) of greater than 0.8.

The failure to construct statistically defensible correlation models at four AUMs has been identified as a data gap in the relevant AUM report. The unsatisfactory correlation result at these locations is likely due to the small number of correlation locations, or environmental conditions at the AUMs (e.g., spatial heterogeneity in radionuclide concentration in soil, topographic features influencing gamma count rate, etc.), or some combination thereof.

Note that while the statistical measures (i.e., conformance with the study DQO of $R^2 > 0.8$) associated with these regressions can be improved by fitting a power curve to the data, and reporting unadjusted R^2 values, with only five data points at each AUM, ERG does not believe that any statistical correlation model is sufficiently robust to make meaningful inferences concerning soil radium-226 concentration from the gamma scanning data. ERG believes that linear functions – not power curves – best mimic the conceptual model for the physical processes governing the observed data. Fitting any other function in an effort to achieve the study DQO for R^2 is not a statistically rigorous approach, and improving R^2 does not commensurately improve a statistical model's predictive ability. Figure *1* compares the result of fitting a linear versus a power function to the available correlation data for one AUM (Hoskie Tso); the other AUM results are similar.

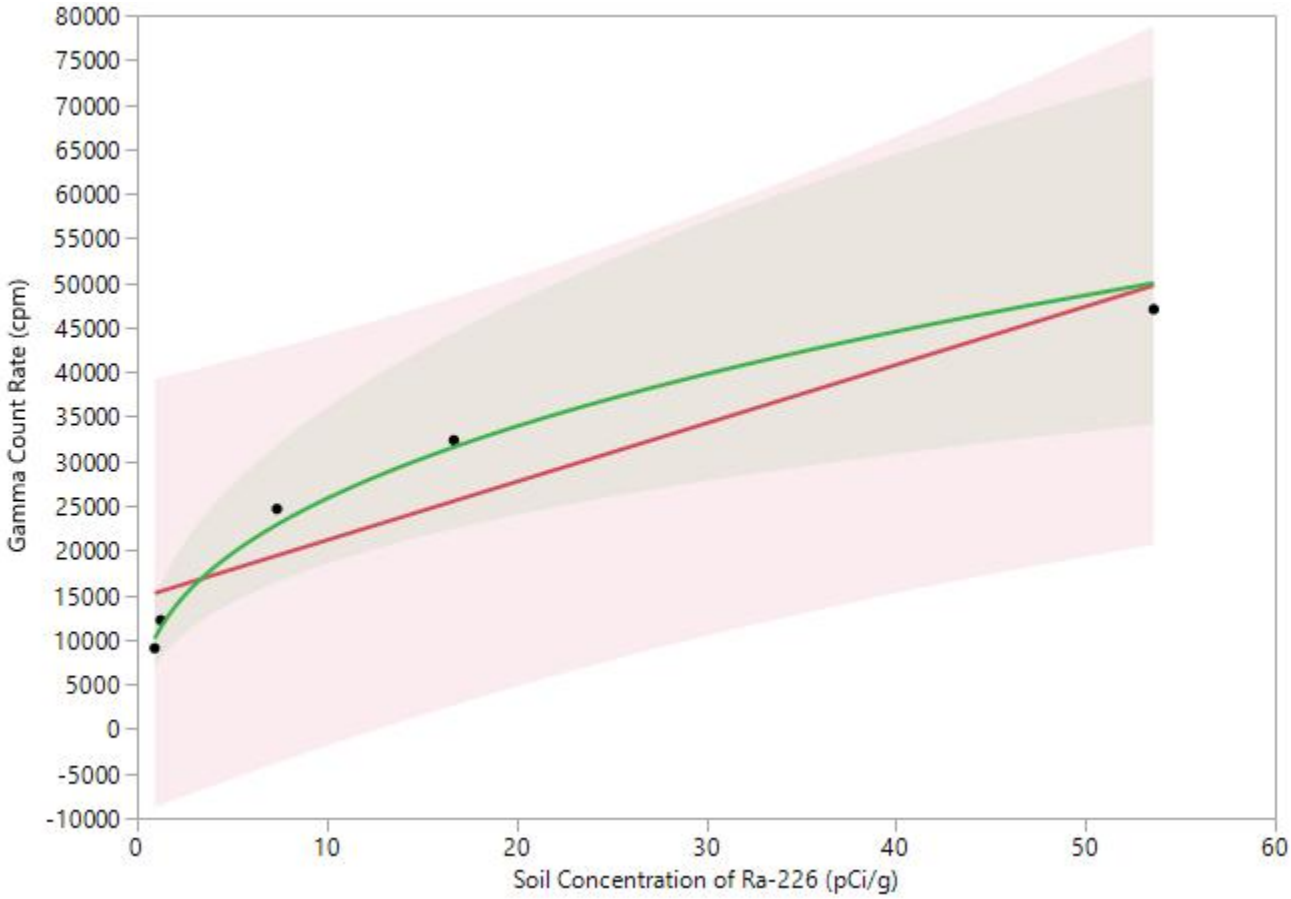

Figure 1. Regression models (linear versus power curve) for gamma count rate regressed on radium-226 showing 95% UPLs (upper prediction limits). Both models meet the study DQO for adjusted R^2 (greater than 0.8). Gamma count rate is not an especially strong predictor of soil concentration of radium-226 for either function.

ERG has updated the individual AUM reports with linear correlation functions and reported the more robust measures of statistical performance described in this memo.

Evaluation of Secular Equilibrium Between Ra-226 and Th-230

Secular equilibrium is a condition that occurs when the half-life of a decay-product nuclide is significantly shorter than that of its parent nuclide. After a period of ingrowth equal to approximately seven times the half-life of the decay product, the two nuclides effectively decay with the half-life of the parent. When two radionuclides are in secular equilibrium, their activities are equal.

Equilibrium, for the purpose of this report, is defined as a condition whereby a parent nuclide and its decay product are present in the environment at a fixed ratio, but this ratio – for whatever reason – is not a one-to-one relationship indicative of secular equilibrium. Most commonly, an equilibrium condition results from an environmental process which chemically selects for and

transports one nuclide (parent or decay product) away from the other nuclide. Because a consistent fraction of one nuclide has been removed, the two nuclides are present at a fixed ratio other than one-to-one.

Determination of secular equilibrium for an AUM can be an important part of the risk assessment process, as the assumed fraction of radium-226 decay products present in the environment greatly influences a hypothetical receptor's radiation dose and mortality risk. However, it is also acceptable and conservative to assume secular equilibrium between radium-226 and its decay products for the purpose of risk assessment, and therefore to avoid the need to conclusively determine the secular equilibrium status of an AUM. Thus, an inconclusive result regarding secular equilibrium is not a study data gap, as the risk assessment phase may still proceed, provided that conservative assumptions are included regarding equilibrium concentrations of radium-226 decay products.

Regardless, the Navajo Nation AUM Environmental Response Trust RSE workplan specified that an evaluation of secular equilibrium would be made at each of the 16 Trust AUMs, and so a robust statistical examination of secular equilibrium status for radium-226 and its decay products at each AUM was conducted. One method of evaluating equilibrium between Ra-226 and Th-230 is to calculate the ratio (φ) between the two nuclides for each soil sample location, i.e.,

$$\varphi = \frac{\left[{}^{226}Ra\right]}{\left[{}^{230}Th\right]}$$

When φ is unity, the two nuclides may be said to be in secular equilibrium. Sometimes, φ is averaged over a number of locations, and if the average is unity, the population of measurement locations is said to be in secular equilibrium. Similarly, if φ is consistently some number other than one, it may be concluded that the measured population is in equilibrium. This approach does not account for the statistical uncertainty associated with making inferences across a population, nor the bias introduced into the measurement by averaging a potentially large number of ratios. It is also difficult to establish defensible cutoffs for whether Ra-226 and Th-230 are in secular equilibrium at a particular site using a ratio approach, as there is no objective basis for concluding, e.g., that φ must be between 0.8 and 1.2 (versus any other range of values for φ) for secular equilibrium to occur.

Due to a large number of reviewer comments concerning secular equilibrium within the RSE reports, Environmental Restoration Group opted to re-evaluate equilibrium at each mine site using a more robust statistical method: simple linear regression. This was done after confirming the methods to analyze Ra-226 (EPA Method 901.1) and Th-230 (alpha spectroscopy following sample digestion with hydrofluoric acid) are both total-activity methods with comparable results (L. Steere, ALS personal email communication, July 25, 2018). Evaluation of secular equilibrium for each mine site proceeded as follows:

1. Construction of a figure that depicts soil concentrations of Th-230 plotted against soil concentrations of Ra-226.

2. Simple linear regression is performed on the dataset; the p-value and the adjusted R^2 are recorded. The resulting linear model and the 95% UCL (upper confidence limit) bands are plotted on the figure generated in step 1.

3. The line y=x is added to the figure generated in step 2 (this line represents a perfect 1:1 ratio between Th-230 to Ra-226, indicative of secular equilibrium).

4. An examination of the model and the figure is made sequentially:

    a. If the p-value for the regression slope is insignificant (i.e., $p > 0.05$) or the adjusted R^2 does not meet the study's data quality objective (Adjusted $R^2 > 0.8$), ERG concludes that there is insufficient evidence to conclude that Ra-226 and Th-230 are in equilibrium (secular or otherwise) therefore, it is listed as inconclusive (no equilibrium). Figure *2* depicts the regression result for an AUM (Mitten) that failed to meet the p-value and adjusted R^2 criteria.

    b. If the p-value for the regression slope is significant (i.e., $p < 0.05$) and the adjusted R^2 meets the DQO (Adjusted $R^2 > 0.8$) there are two possible conditions, which are evaluated via visual examination of the figure generated in step 3.

        i. If the y=x line falls fully within the bounds of the 95% UCL bands on the regression, ERG concludes that there is evidence that Ra-226 and Th-230 are in secular equilibrium at the site. Figure *3* depicts the regression result for an AUM (Harvey Blackwater) where there is evidence that Ra-226 and Th-230 are in secular equilibrium.

        ii. If the y=x line falls partially or completely outside the bounds of the 95% UCL bands on the regression, ERG concludes that there is evidence that Ra-226 and Th-230 are in equilibrium, but not secular equilibrium at the site. Figure *4* depicts the regression result for an AUM (Alongo Mines) where there is evidence that Ra-226 and Th-230 are in equilibrium, but not secular equilibrium.

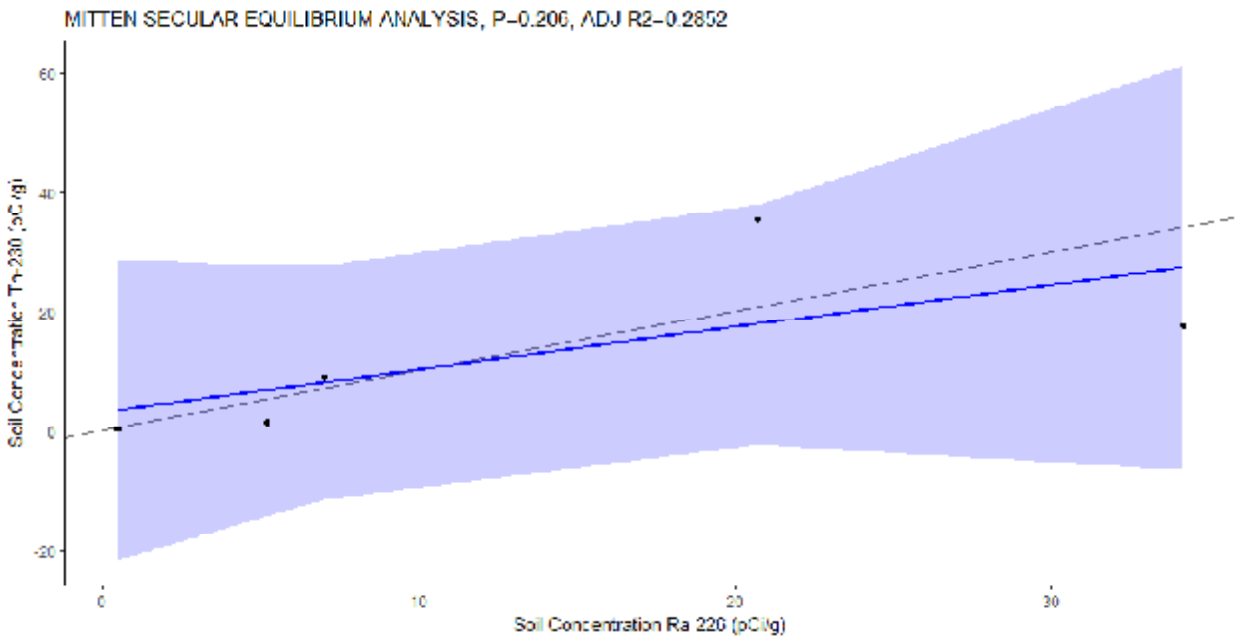

Figure 2. Result for Mitten secular equilibrium analysis, showing failure to meet p-value and adjusted R^2 criteria, i.e., the data are poorly correlated.

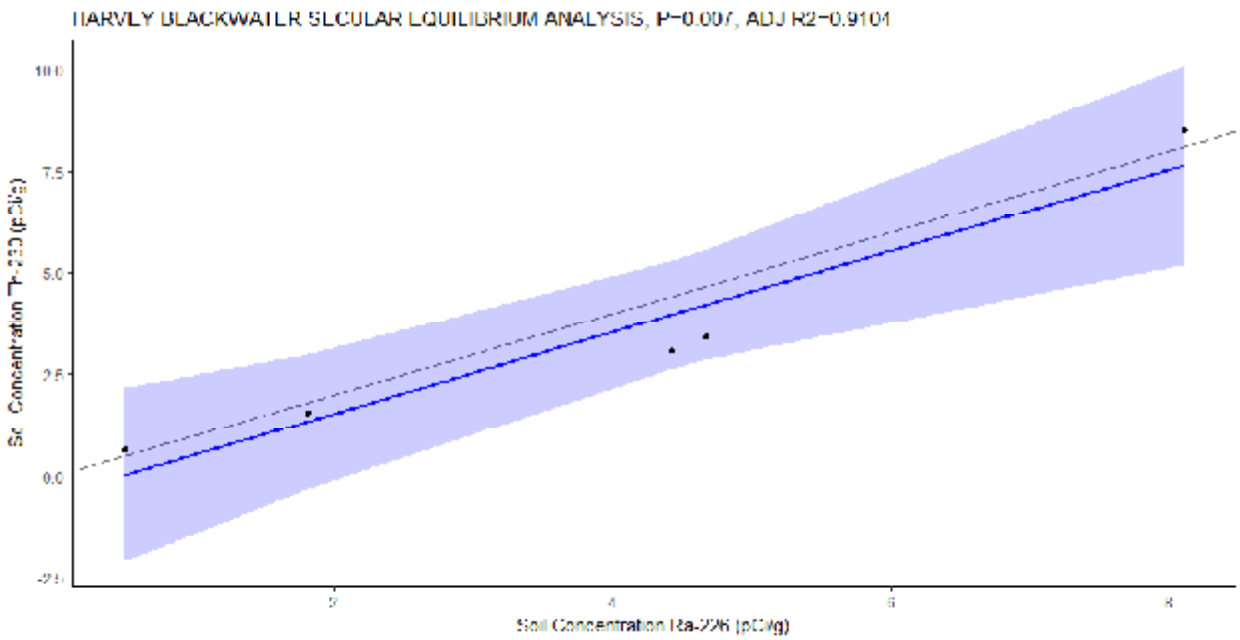

Figure 3. Result for Harvey Blackwater secular equilibrium analysis, showing excellent correlation between the data and the y=x line, i.e., Th-230 and Ra-226 are in secular equilibrium.

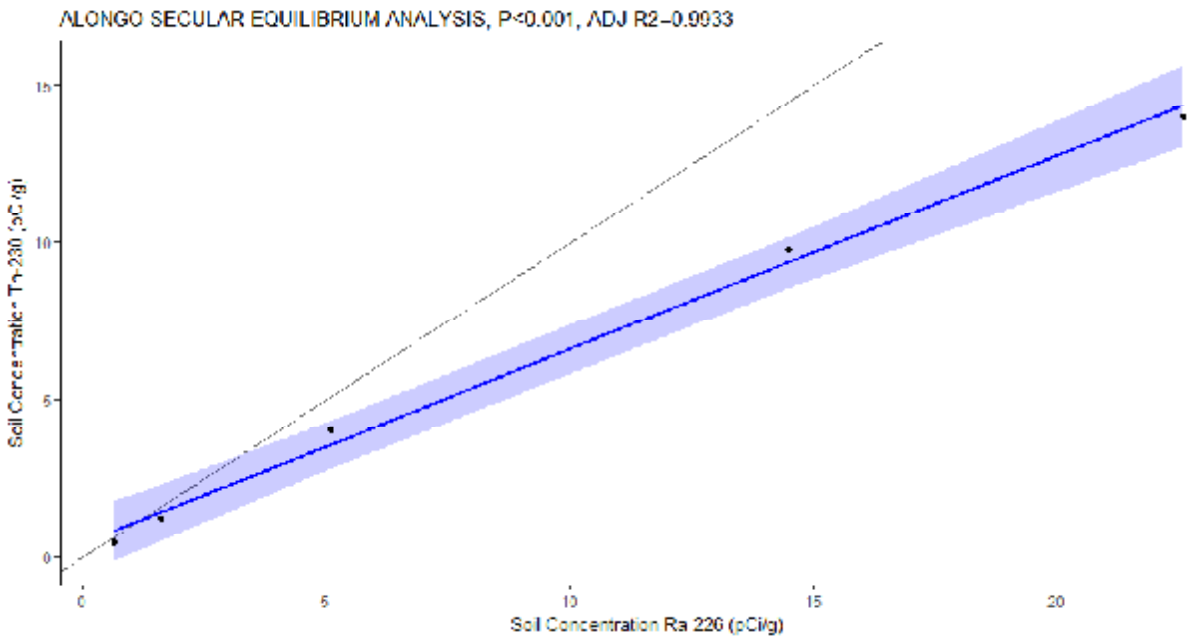

Figure 4. Result for Alongo Mines secular equilibrium analysis, showing excellent correlation between the data, but poor agreement with the y=x line, i.e., Th-230 and Ra-226 are in equilibrium, but not secular equilibrium.

ERG tested for secular equilibrium at each of the 16 Navajo AUMs using the process described above. The results are summarized in Table 1 and in the RSE report for each AUM, respectively. ERG concluded that the data provide evidence that that Ra-226 and Th-230 are in secular equilibrium in soils at two mines (Harvey Blackwater and NA-0928). At one mine (Mitten) there was insufficient evidence to draw any conclusions regarding equilibrium. At the remaining sites, there is evidence that Ra-226 and Th-230 are in equilibrium.

Table 1. Results of secular equilibrium analysis for each of the 16 Navajo Trust AUMs.

Mine	p-value	Adjusted R^2	Conclusion
Alongo Mine	<0.001	0.99	Equilibrium
Barton 3	<0.001	0.98	Equilibrium
Boyd Tisi	<0.001	0.99	Equilibrium
Charles Keith	<0.001	0.99	Equilibrium
Claim 28	<0.001	0.99	Equilibrium
Eunice Becenti	<0.001	0.99	Equilibrium
Harvey Blackwater	0.008	0.91	Secular Equilibrium
Hoskie Tso	<0.001	0.99	Equilibrium
Mitten	0.2	0.29	No Equilibrium
NA-0904	0.001	0.98	Equilibrium
NA-0928	0.002	0.97	Secular Equilibrium
Oak 124-125	<0.001	0.99	Equilibrium
Occurrence B	<0.001	0.98	Equilibrium
Section 26	0.002	0.96	Equilibrium
Standing Rock	0.008	0.91	Equilibrium
Tsosie 1	0.02	0.86	Equilibrium

Appendix D Preliminary Report "Radiological Characterization of Barton 3 Abandoned Uranium Mine"

Disclaimer: Data and analytical methods used in this Preliminary Report are superseded by the Final Report.

Radiological Characterization of the Barton 3 Abandoned Uranium Mine

Preliminary

February 20, 2018

prepared for:

Stantec Consulting Services Inc.

2130 Resort Drive, Suite 350
Steamboat Springs, CO 80487

prepared by:

Environmental Restoration Group, Inc.

8809 Washington St. NE
Suite 150
Albuquerque, NM 87113

Contents

Executive Summary iv

1.0 Introduction 1

2.0 GPS-Based Gamma Surveys 1

2.1 Potential Background Reference Areas 3

2.2 Survey Area 6

3.0 Correlation Studies 9

3.1 Radium-226 concentrations in surface soils and gamma count rates 9

3.2 Equilibrium in the uranium series 13

3.3 Exposure rates and gamma count rates 15

4.0 Deviations to RSE Work Plan 19

5.0 Conclusions 19

6.0 References 20

Tables

Table 1 Detection systems used in the GPS-based gamma surveys

Table 2 Summary statistics for gamma count rates in the potential Background Reference Areas

Table 3 Summary statistics for gamma count rates in the Survey Area

Table 4 Gamma count rates and associated concentrations of radium-226 in samples of surface soils obtained in the correlation study

Table 5 Concentrations of isotopes of thorium in samples of surface soils obtained in the correlation study

Table 6 Predicted concentrations of radium-226 in the Survey Area

Table 7 Co-located gamma count rate and exposure rate measurements

Table 8 Predicted exposure rates in the potential Background Reference Areas

Table 9 Predicted exposure rates in the Survey Area

Figures

Figure 1 Location of the Barton 3 Abandoned Uranium Mine

Figure 2 Gamma count rates in the potential Background Reference Areas

Figure 3 Histogram of gamma count rates in the potential Background Reference Areas

Figure 4 Gamma count rates in the Survey Area

Figure 5 Histogram of gamma count rates in the Survey Area

Figure 6 Box plot of gamma count rates in the Survey Area

Figure 7 GPS-based gamma count rate measurements made for the correlation study

Figure 8 Correlation of gamma count rates and concentrations of radium-226 in surface soils

Figure 9 Predicted concentrations of radium-226 in the Survey Area

Figure 10 Correlation of gamma count rates and exposure rates

Figure 11 Predicted exposure rates in the Survey Area

Appendices

Appendix A Instrument calibration and completed function check forms

Appendix B Exposure Rate Measurements

Acronyms

ANSI	American National Standards Institute
AUM	abandoned uranium mine
BG1	Background Reference Area 1
BG2	Background Reference Area 2
BG3	Background Reference Area 3
cpm	counts per minute
DQOs	data quality objectives
EPA	U.S. Environmental Protection Agency
ERG	Environmental Restoration Group, Inc.
ft	foot
GPS	global positioning system
MDL	method detection limit
µR/h	microRoentgens per hour
pCi/g	picocuries per gram
R^2	Pearson's Correlation Coefficient
RSE	removal site evaluation
σ	standard deviation
Stantec	Stantec Consulting Services Inc.

Executive Summary

This report addresses the radiological characterization of the Barton 3 abandoned uranium mine (AUM) located in the Red Mesa Chapter of the Navajo Nation near Red Mesa, Arizona. It documents part of the implementation of the Navajo Nation AUM Environmental Response Trust, First Phase, Removal Site Evaluation Work Plan (RSE Work Plan: MWH, 2016). The work was performed by Environmental Restoration Group, Inc. of Albuquerque, New Mexico and Stantec Consulting Services Inc. (Stantec) on behalf of the Navajo Nation AUM Environmental Response Trust – First Phase.

This report provides 1) the results of a Global Positioning System (GPS)-based gamma radiation (gamma) survey, 2) comparisons of the gamma count rates at this AUM to exposure rates and concentrations of radium-226 in surface soils, and 3) an assessment of equilibrium in the uranium series. The field activities addressed in this report were conducted on April 7 and October 3, 12, and 14, 2016; and April 17, June 7, and September 12 and 13, 2017. They included a GPS-based radiological survey of land surfaces over a Survey Area consisting of the mine claim area out to a 100-foot (ft) buffer, roads and drainages within a 0.25-mile radius of the 100-ft buffer, areas where the survey was extended; and correlation studies.

The discussion of the results of soil sampling in this report is limited to concentrations of radium-226 and isotopes of thorium in samples taken from surface soils, as part of correlation studies. The objective of the analysis of thorium isotopes was to 1) assess the potential effects of thorium-232 and thorium-228 on the correlation of gamma count rates to concentrations of radium-226 in surface soils; and 2) evaluate thorium-230 and radium-226 activities to indicate the status of equilibrium in the uranium decay series. These and additional results for the RSE are addressed in "Barton 3 Removal Site Evaluation Report" (Stantec, 2018).

The findings of the RSE pertaining to these activities are:

- The horizontal extent and magnitude of mining-related materials were delineated sufficiently to support additional characterization of the subsurface.

- Elevated count rates were observed largely on naturally occurring rock outcrops situated north of the mine claim.

- Three potential Background Reference Areas were established.

- The relationship between gamma count rates and concentrations of radium-226 in surface soils (0 to 0.5 ft below ground surface) is described by a linear regression model:

Radium-226 concentration (picocuries per gram [pCi/g]) =
4×10^{-4} x Gamma Count Rate (in counts per minute [cpm]) – 1.3309

- The distribution of concentrations of radium-226 in surface soils predicted using this model resembles a lognormal distribution. The values in the Survey Area range from 1.0 to 23.4, with a central tendency (median) of 3.0 pCi/g.

- The thorium series radionuclides do not appear to affect the prediction of concentrations of radium-226 from gamma count rates.

- The uranium series radionuclides appear not to be in secular equilibrium.

- The relationship between gamma count rates and exposure rates is described by a linear regression model:

  Exposure Rate (microRoentgens per hour [µR/h]) = Gamma Count Rate (cpm) x 5×10^{-4} + 6.4064

- The distribution of exposure rates predicted using this model resembles a lognormal distribution. The values in the Survey Area range from 9.4 to 37.3, with a central tendency (median) of 11.8 µR/h.

1.0 Introduction

This report addresses the radiological characterization of the Barton 3 abandoned uranium mine (AUM) located in the Red Mesa Chapter of the Navajo Nation near Red Mesa, Arizona. It documents part of the implementation of the Navajo Nation AUM Environmental Response Trust, First Phase, Removal Site Evaluation Work Plan (RSE Work Plan: MWH, 2016). The work was performed by Environmental Restoration Group, Inc. of Albuquerque, New Mexico and Stantec Consulting Services Inc. (Stantec) on behalf of the Navajo Nation AUM Environmental Response Trust – First Phase.

This report provides 1) the results of a Global Positioning System (GPS)-based gamma radiation (gamma) survey, 2) comparisons of the gamma count rates at this AUM to exposure rates and concentrations of radium-226 in surface soils, and 3) an assessment of equilibrium in the uranium series. The field activities addressed in this report were conducted on April 7 and October 3, 12, and 14, 2016; and April 17, June 7, and September 12 and 13, 2017. They included a GPS-based radiological survey of land surfaces over an approximately 13.5-acre Survey Area consisting of the mine claim area out to a 100-foot (ft) buffer, roads and drainages within a 0.25-mile radius of the 100-ft buffer, and areas where the survey was extended; and correlation studies.

The discussion of the results of soil sampling in this report is limited to concentrations of radium-226 and isotopes of thorium in samples taken from surface soils, as part of correlation studies. The objective of the analysis of thorium isotopes was to 1) assess the potential effects of thorium-232 and thorium-228 on the correlation of gamma count rates to concentrations of radium-226 in surface soils; and 2) evaluate thorium-230 and radium-226 activities to indicate the status of equilibrium in the uranium decay series. These and additional results for the RSE are addressed in “Barton 3 Removal Site Evaluation Report” (Stantec, 2018).

Figure 1 shows the location of the AUM. Background information that is pertinent to the characterization of this AUM is presented in “Barton 3 Removal Site Evaluation Report” (Stantec, 2018).

2.0 GPS-Based Gamma Surveys

This section addresses the GPS-based surveys conducted in three potential Background Reference Areas and the Survey Area. The survey was extended to bound areas in which elevated count rates were observed. Table 1 lists the detection systems used in the survey, which were function-checked before and after each day of use and within calibration, in accordance with American National Standards Institute (ANSI) Standard N232A (ANSI, 1997). Appendix A presents the completed function check forms and calibration certificates for the instruments.

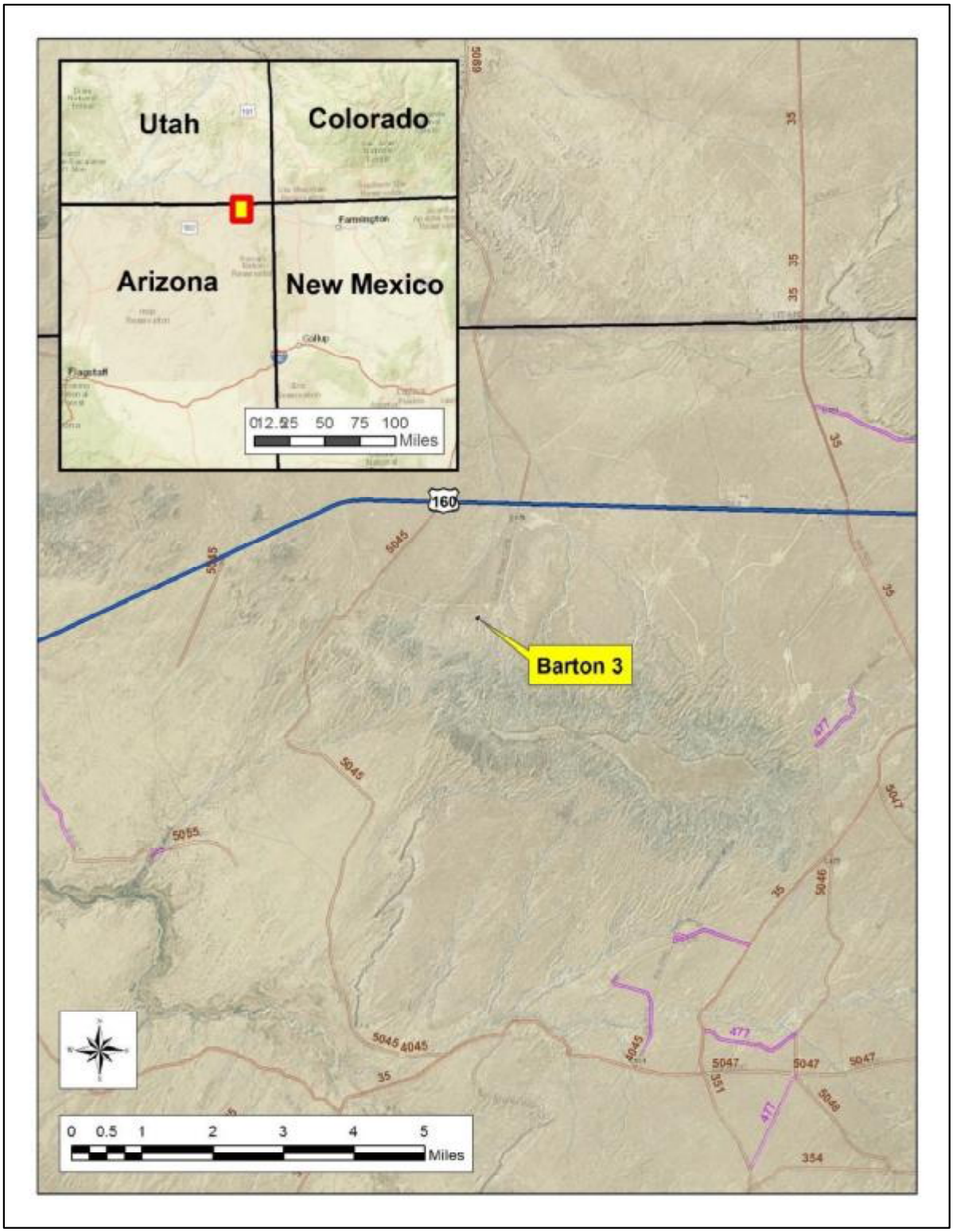

Figure 1. Location of the Barton 3 Abandoned Uranium Mine

Table 1. Detection systems used in the GPS-Based gamma surveys.

Survey Area	Ludlum Model 44-10	Ludlum Model 2221 Ratemeter/Scaler
Potential Background Reference Areas	PR303727[a]	254772 [a]
Survey Area	PR29260	254757
	PR295014	196086
	PR320678	282971
	PR303727[a]	254772 [a]
	PR355763	138368

Notes:
[a]Detection system used in the correlation studies described in Section 3.0.

2.1 Potential Background Reference Areas

Three potential Background Reference Areas were surveyed, the locations and results of which are depicted on Figure 2. BG1, BG2, and BG3 in the figure are Background Reference Areas 1, 2, and 3, respectively. Table 2 lists a summary of the gamma count rates, which in:

- BG1 ranged from 7,228 to 36,911 counts per minute (cpm), with a mean and median of 11,990 and 9,936 cpm, respectively.
- BG2 ranged from 5,407 to 8,979 cpm, with a mean and median of 7,198 and 7,148 cpm, respectively.
- BG3 ranged from 6,583 to 11,726 cpm, with a mean and median of 9,354 and 9,290 cpm, respectively.

The higher count rates observed in BG1 were associated with grey/green sands.

Figure 3 depicts histograms of the gamma count rates in in the Background Reference Areas. The red and green lines on the figure are theoretical normal and lognormal distributions, respectively. They are presented to show what could be expected if the distributions were normal or lognormal.

Table 2. Summary statistics for gamma count rates in the potential Background Reference Areas.

	Gamma Count Rate (cpm)					
Potential Background Reference Area	n	Minimum	Maximum	Mean	Median	Standard Deviation
1	310	7,228	36,911	11,990	9,936	5,337
2	186	5,407	8,979	7,198	7,148	649
3	474	6,583	11,726	9,354	9,290	749

Notes:
cpm = counts per minute

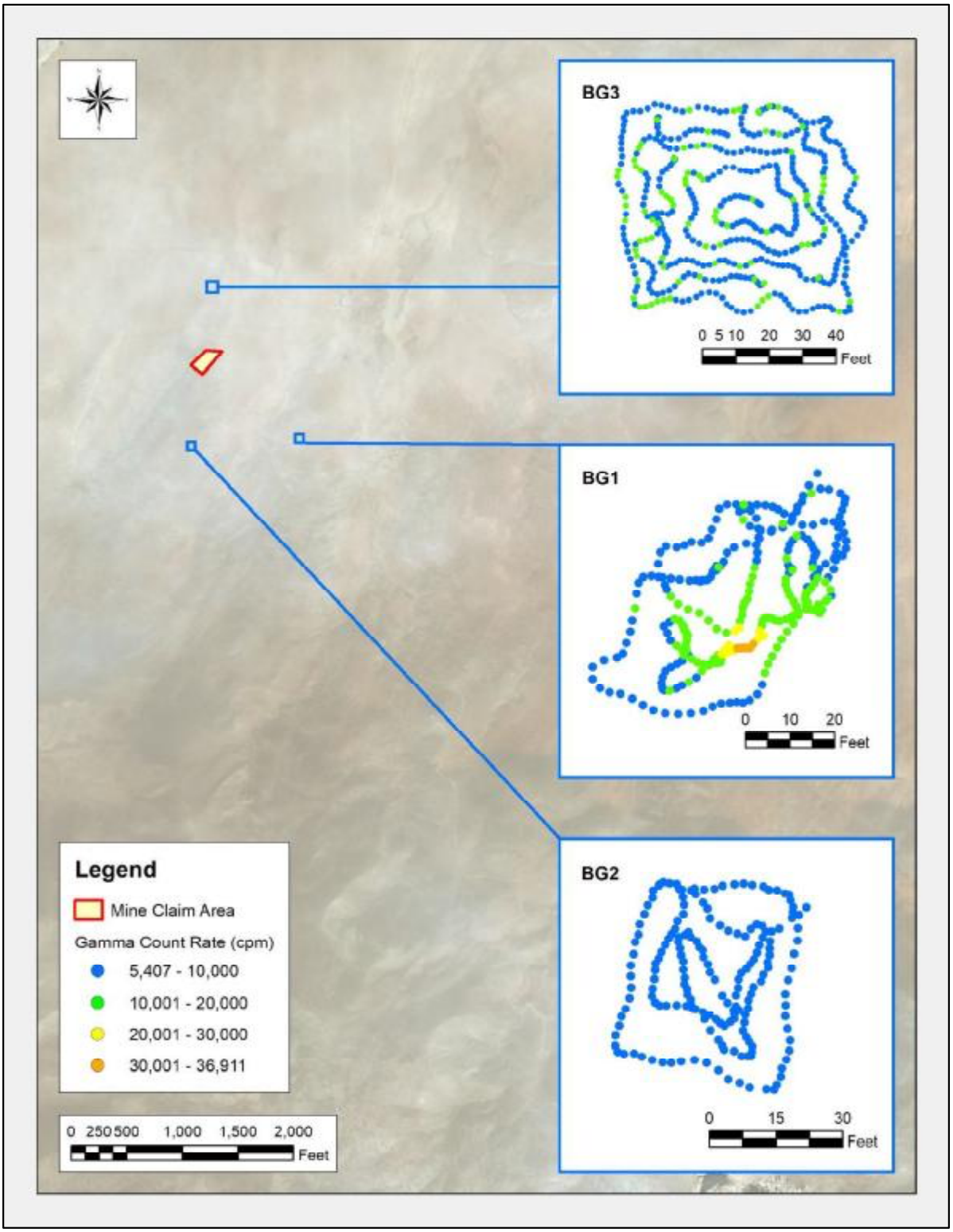

Figure 2. Gamma count rates in the potential Background Reference Areas.

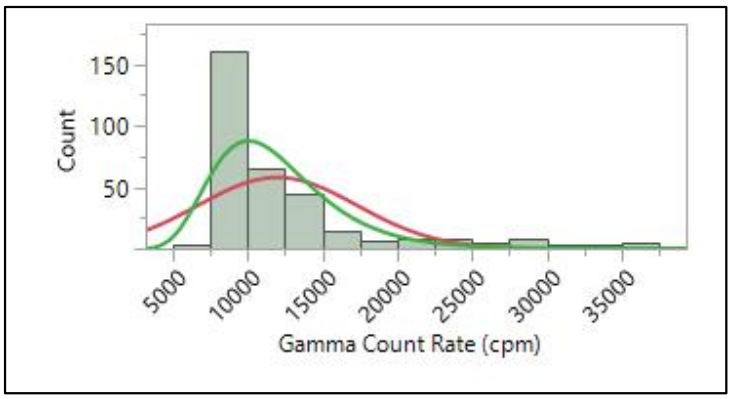

a. Background Reference Area 1

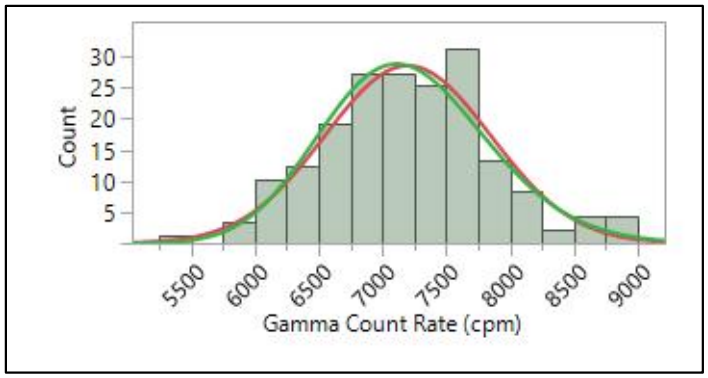

b. Background Reference Area 2

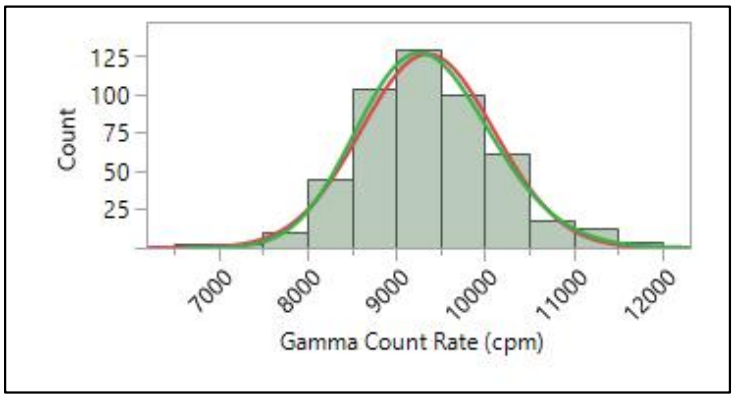

a. Background Reference Area 3

Figure 3. Histograms of gamma count rates in the Background Reference Areas.

2.2 Survey Area

The gamma count rates observed in the Survey Area are depicted in Figure 4. The highest count rates were observed north of the mine claim, on and around the reclaimed area.

Figure 5 is a histogram of the gamma count rate measurements made in the Survey Area, including the area surveyed outside the 100-ft buffer. As stated in Section 2.1, the red and green lines on the figure are theoretical normal and lognormal distributions, respectively. They are presented to show what could be expected if the distributions were normal or lognormal. The distribution of the right-tailed set of measurements, evaluated using U.S. Environmental Protection Agency software ProUCL (version 5.1.002), is not defined; i.e., neither normal or logarithmic. The box plot in Figure 6 depicts cutoffs as horizontal bars, from bottom to top, for the following values or percentiles: minimum, 0.5, 2.5, 10, 25, 50, 75, 90, 97.5, 99.5, and maximum. The 25th, 50th, and 75th percentiles (the three horizontal lines of the box inside the box plot) are 9,448, 10,723, and 13,142 cpm, respectively.

Table 3 is a statistical summary of the measurements, which range from 5,930 to 61,743 cpm and have a central tendency (median) of 10,723 cpm.

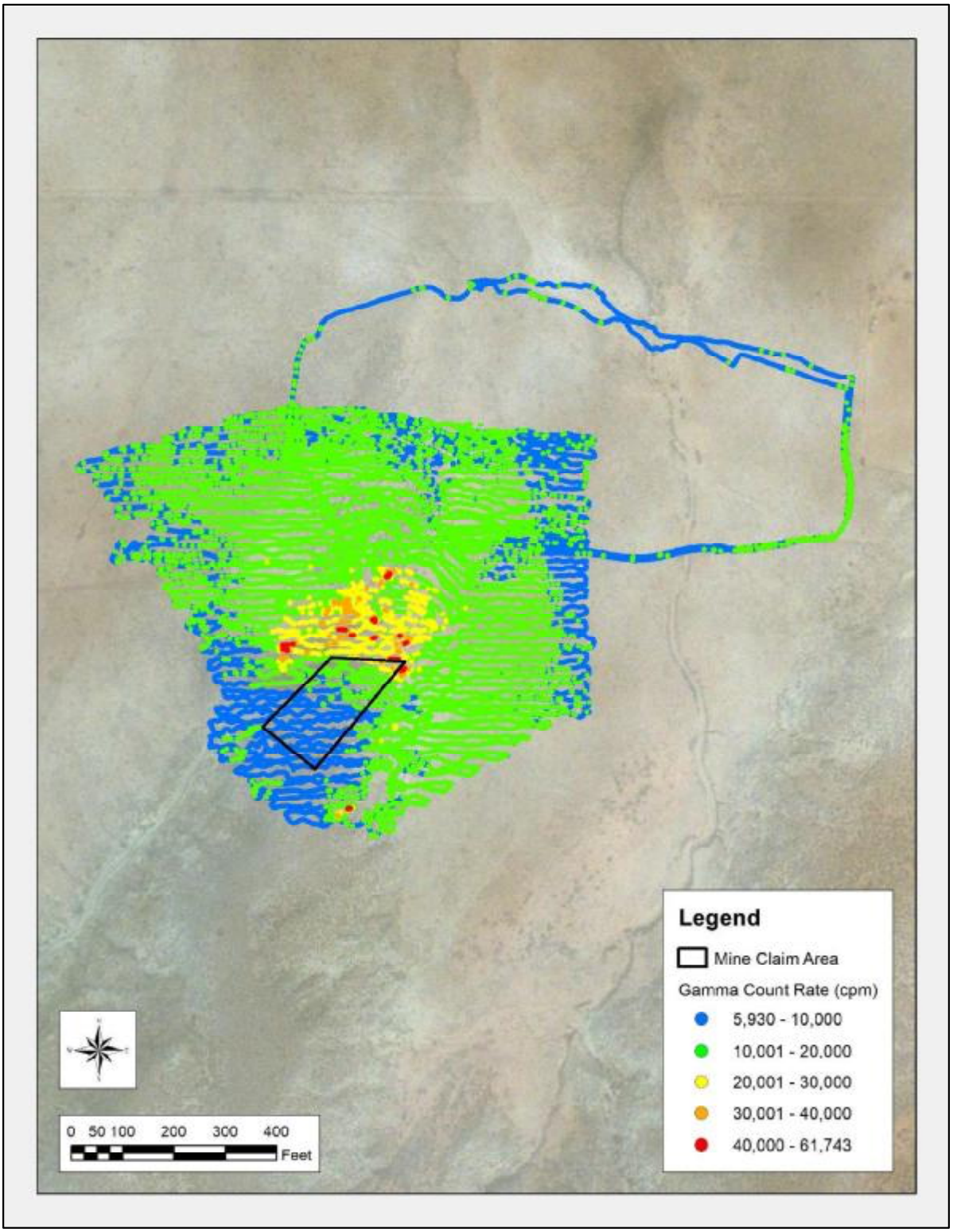

Figure 4. Gamma count rates in the Survey Area.

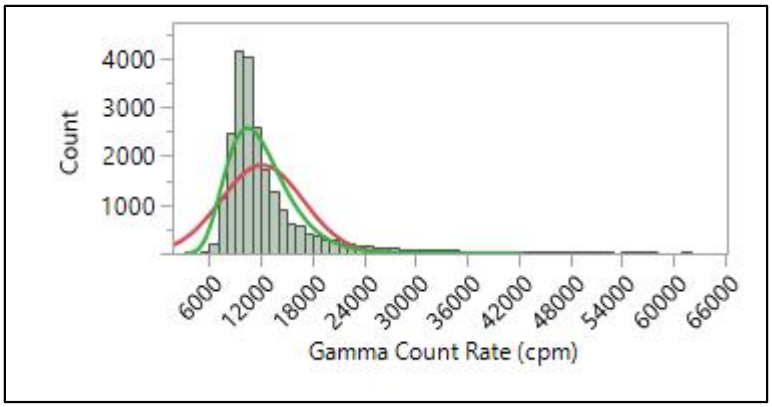

Figure 5. Histogram of gamma count rates in the Survey Area.

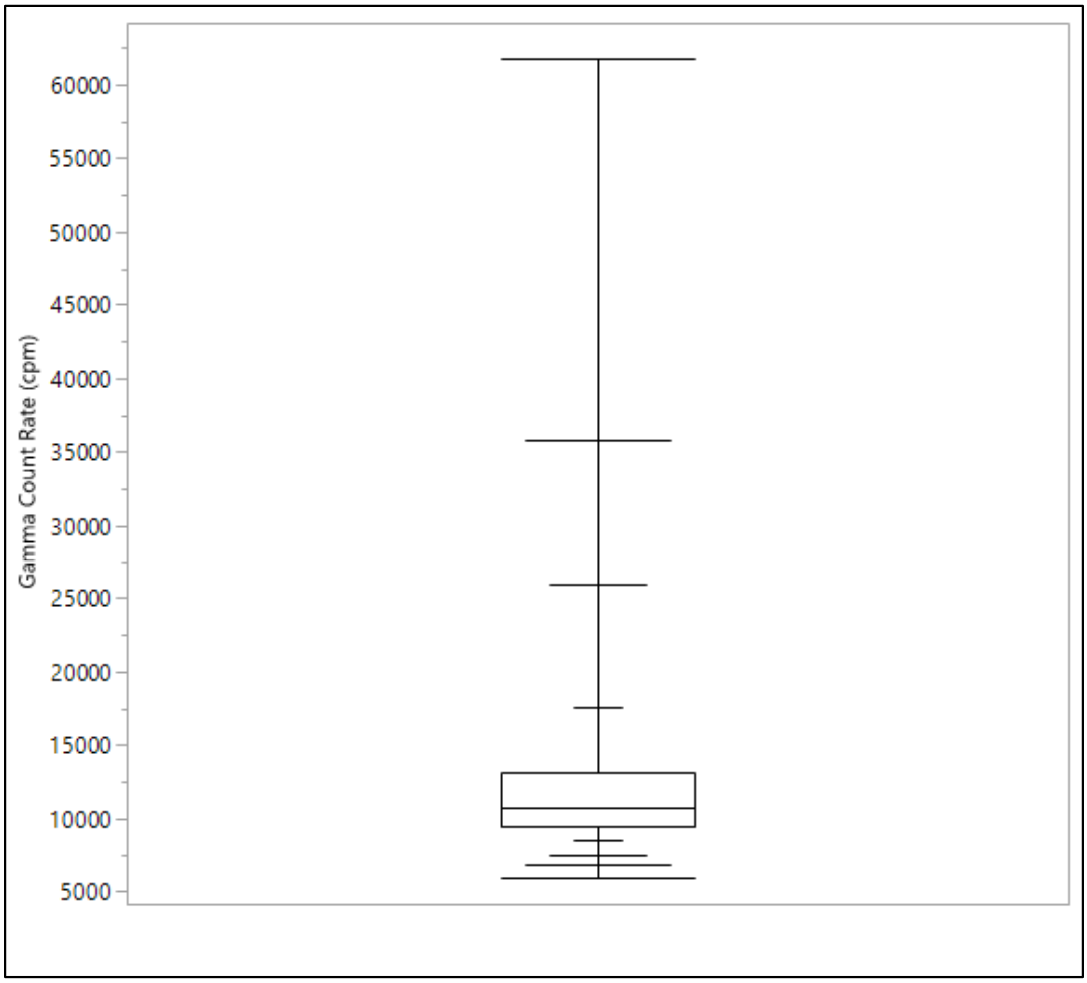

Figure 6. Box plot of gamma count rates in the Survey Area.

Table 3. Summary statistics for gamma count rates in the Survey Area.

Parameter	Gamma Count Rate (cpm)
n	21,694
Minimum	5,930
Maximum	61,743
Mean	12,164
Median	10,723
Standard Deviation	4,785

Notes:
cpm = counts per minute

3.0 Correlation Studies

The following sections address the activities under two types of correlation studies outlined in the RSE Work Plan: comparisons of 1) radium-226 concentrations in surface soils and gamma count rates and 2) exposure rates and gamma count rates. GPS-based gamma count rate measurements were made over small areas for the former study. The means of the measurements were used in this case. Static gamma count rate measurements, co-located with exposure rate measurements, were used in the latter study.

3.1 Radium-226 concentrations in surface soils and gamma count rates

On October 14, 2016 field personnel made GPS-based gamma count rates measurements and collected five-point composite samples of surface soils in each of five areas at the AUM. The activities were performed contemporaneously, by area and all on the same day, such that variations in the gamma count rate measurements could be limited largely to those posed by the soils and rocks at the locations. Figure 7 shows the GPS-based gamma count rate measurements in the five areas (labeled with location identifiers).

The soil samples were analyzed by ALS Laboratories in Ft Collins, CO for radium-226 and isotopic thorium. The latter analysis was included to assess the potential effects of thorium series isotopes on the correlation and evaluate thorium-230 and radium-226 activities to indicate the status of equilibrium in the uranium decay series. Table 4 lists the results of the gamma count rate measurements made only on May 24, 2017 and radium-226 concentrations in the soil samples. The means of the gamma count rate measurements range from 8,673 to 32,608 cpm. The concentrations of radium-226 in the soil samples range from 0.98 to 10.6 pCi/g.

Table 5 lists the concentrations of isotopes of thorium (thorium-228, -230, and -232) in the same soil samples.

Laboratory analyses are presented in Appendix D, Laboratory Analytical Data and Data Usability Report, in “Barton 3 Removal Site Evaluation Report” (Stantec, 2018).

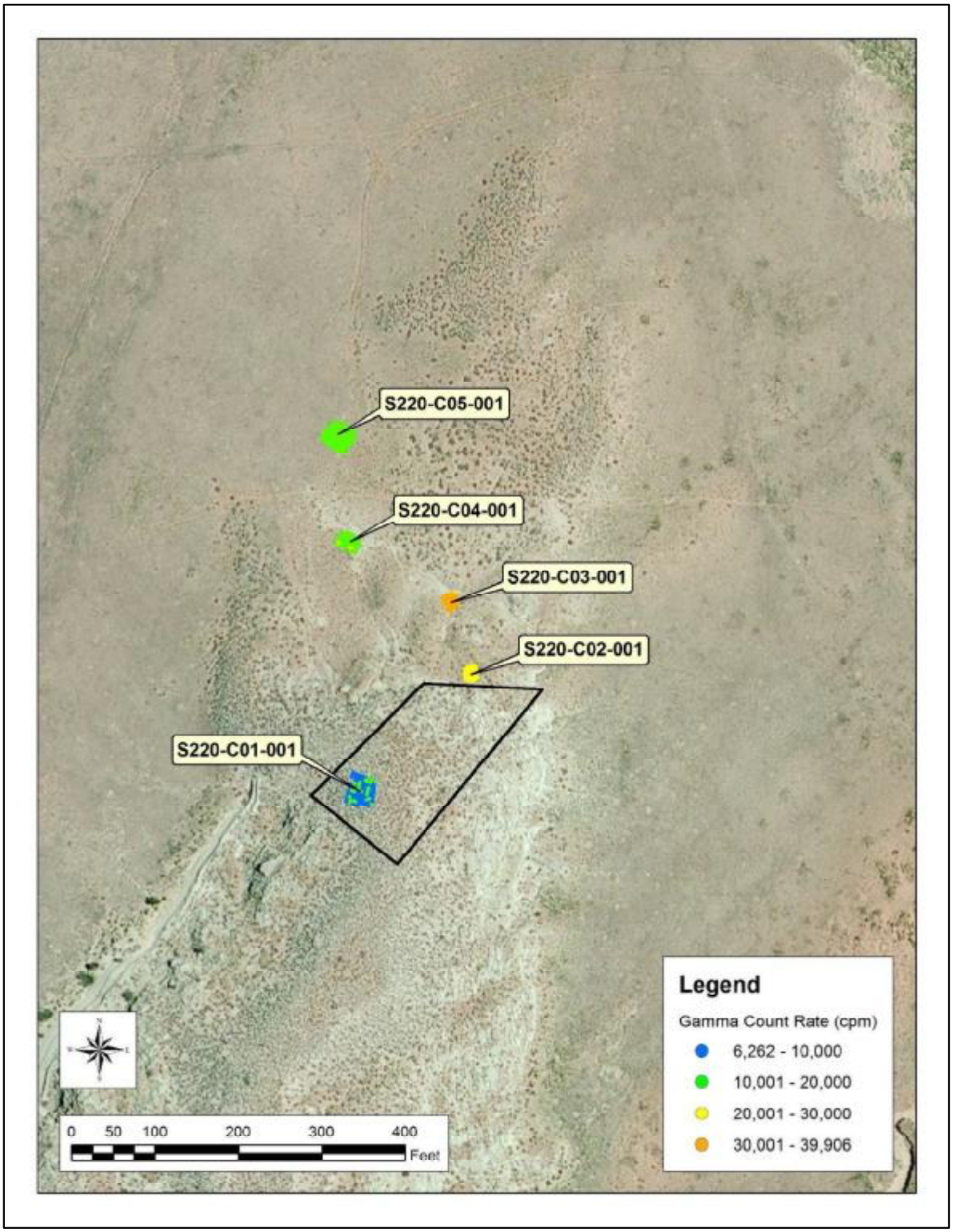

Figure 7. GPS-based gamma count rate measurements made for the correlation study.

Table 4. Gamma count rates and associated concentrations of radium-226 in samples of surface soils obtained in the correlation study.

	Gamma Count Rate (cpm)				Ra-226 (pCi/g)		
Location	Mean	Minimum	Maximum	σ	Result	Error ±1σ	MDL
S220-C01-001	8,673	6,262	13,383	1,051	0.98	0.26	0.46
S220-C02-001	23,849	19,568	29,530	2,006	6.44	0.84	0.4
S220-C03-001	32,608	27,746	39,906	2,372	10.6	1.4	0.6
S220-C04-001	17,557	14,336	21,006	1,151	6.73	0.89	0.46
S220-C05-001	12,564	10,126	17,552	1,080	3.52	0.51	0.35

Notes:
cpm = counts per minute
MDL = method detection limit
pCi/g = picocuries per gram
σ = standard deviation

Table 5. Concentrations of isotopes of thorium in samples of surface soils obtained in the correlation study.

	Thorium-228 (pCi/g)			Thorium-230 (pCi/g)			Thorium-232 (pCi/g)		
Sample ID	Result	Error ± 1 σ	MDL	Result	Error ± 1 σ	MDL	Result	Error ± 1 σ	MDL
S220-C01	0.416	0.086	0.039	0.92	0.17	0.07	0.459	0.09	0.02
S220-C02	0.285	0.065	0.03	4.85	0.77	0.07	0.278	0.062	0.016
S220-C03	0.256	0.059	0.031	9.3	1.4	0.1	0.258	0.058	0.018
S220-C04	0.207	0.055	0.035	6.13	0.97	0.07	0.262	0.062	0.022
S220-C05	0.315	0.07	0.033	2.92	0.47	0.07	0.274	0.061	0.019

Notes:
MDL = method detection limit
pCi/g = picocuries per gram
σ = standard deviation

A model was made of the results in Table 4, predicting the concentrations of radium-226 in surface soils from the mean gamma count rate in each area. The best predictive relationship between the measurements, shown in Figure 8 is a strong, linear function with a Pearson's Correlation Coefficient (R^2) of 0.9164, as expressed in the equation:

$$\text{Radium-226 concentration (pCi/g)} = 4 \times 10^{-4} \times \text{Gamma Count Rate (cpm)} - 1.3309$$

R^2 is a measure of the dependence between two variables and is expressed as a value between -1 and +1 where +1 is a positive correlation, 0 is no correlation, and -1 is a negative correlation. The root mean square error and p-value for the model are 1.210937 and 0.0105, respectively; these parameters are not data quality objectives (DQOs) and are included only as information.

The concentrations of thorium-232 and thorium-228, isotopes in the thorium series, in the correlation samples are similar and at most 0.459 pCi/g. Given these low concentrations and the high R^2 of the

linear function, the thorium series radionuclides do not appear to affect the prediction of concentrations of radium-226, using gamma count rates.

This equation was used to convert the gamma count rate measurements observed in the gamma surveys to predicted concentrations of radium-226. Table 6 presents summary statistics for the predicted concentrations of radium-226 in the Survey Area. The range of the predicted concentrations of radium-226 in the Survey Area is 1.0 to 23.4 pCi/g, with a mean and median of 3.5 and 3.0 pCi/g, respectively. Note that the radium-226 concentrations predicted from gamma count rate measurements exceeding approximately 33,000 cpm are extrapolated from the regression model and are uncertain.

Figure 9 shows the predicted concentrations of radium-226, the spatial and numerical distribution of which mirror those depicted in Figure 4.

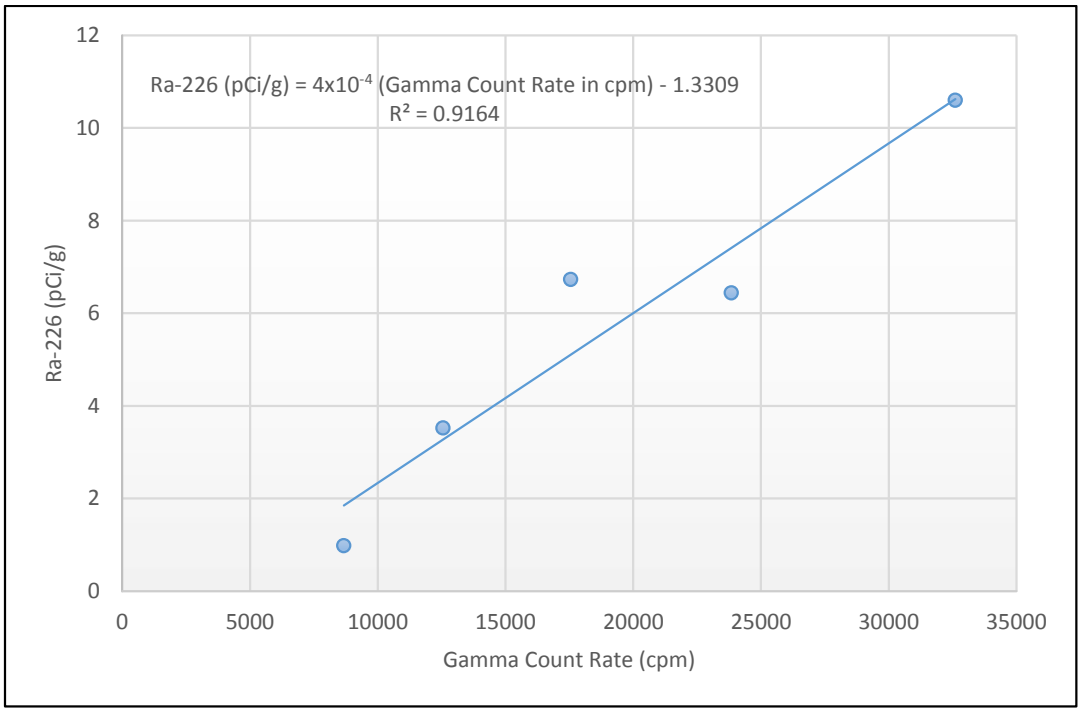

Figure 8. Correlation of gamma count rates and concentrations of radium-226 in surface soils.

Table 6. Predicted concentrations of radium-226 in the Survey Area.

Parameter	Radium-226 (pCi/g)
n	21,694
Minimum	1.0
Maximum	23.4
Mean	3.5
Median	3.0
Standard Deviation	1.9

Notes:
pCi/g = picocuries per gram

3.2 Equilibrium in the uranium series

Secular equilibrium occurs when the activities of a parent radionuclide and its decay product are equal. This can occur in a closed system, when the half-life of the parent radionuclide is much larger than that of the decay product.

The ratio of the concentrations of radium-226 to thorium-230 can be used as an indicator of the status of equilibrium in the uranium series. The half-lives of thorium-230 and radium-226 are 77,000 and 1,600 years, respectively. The ratios in the five correlation samples are 1.1 (Sample S220-C01-001), 1.3 (Sample S220-C02-001), 1.1 (Sample S220-C03-001), 1.1 (Sample S220-C04-001), and 1.2 (Sample S220-C05-001) indicating that thorium-230 is depleted in relation to radium-226 and, by extrapolation, the uranium series itself is not in secular equilibrium.

Note this observation is based on the results of five samples, subject to differing analytical methods. Gamma spectroscopy, the method used to determine the concentration of radium-226, assesses an intact portion of the whole sample as it was collected. The concentration of thorium-230 was determined by alpha spectroscopy of an acid-leached aliquot of the sample.

This evaluation is not related to the correlation of radium-226 concentrations in surface soils and gamma count rates. It may be used for a future risk assessment.

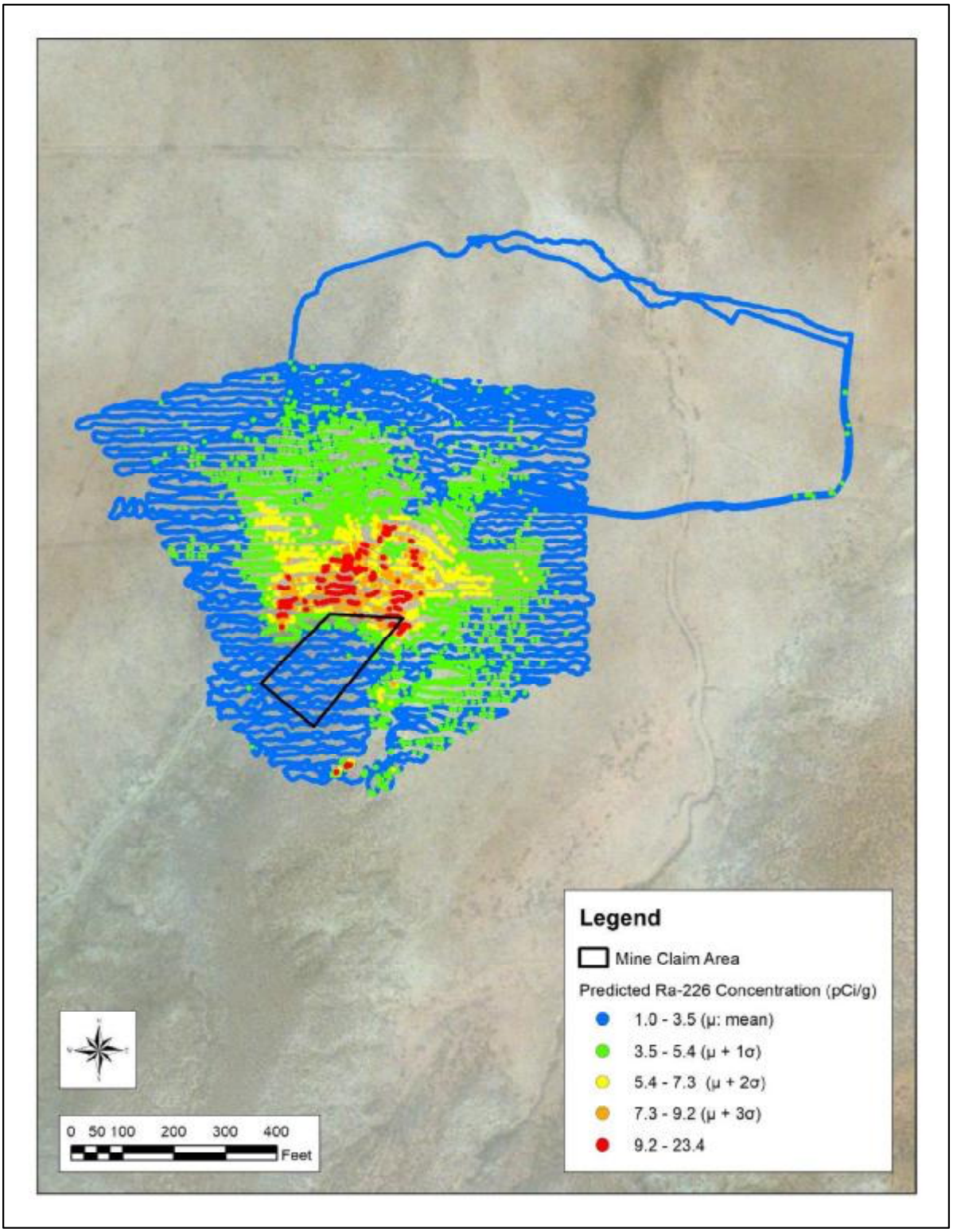

Figure 9. Predicted concentrations of radium-226 in the Survey Area.

3.3 Exposure rates and gamma count rates

On October 14, 2016 field personnel made co-located one-minute static count rate and exposure rate measurements at the five locations within the Survey Area, representing the range of gamma count rates obtained in the GPS-based gamma survey. Figure 7 shows the locations of the co-located measurements, which were made in the centers of the areas.

The gamma count rate and exposure rate measurements were made at 0.5 m and 1 m above the ground surface, respectively. The gamma count rate measurements were made using one of the sodium iodide detection systems used in the GPS-based gamma survey of the AUM (Serial Number PR303727/254772). The exposure rate measurements were made using a Reuter Stokes Model RSS-131 (Serial Number 07J00KM1) high pressure ionization chamber (HPIC) at six-second intervals for about 10 minutes. The exposure rates used in the comparison was the mean of these measurements, less those occurring in initial instrument spikes. The HPIC was in current calibration and function checked before and after use. Calibration forms for the HPIC are provided in Appendix A. Table 7 presents the results for the two types of measurements made at each of the five locations. Appendix B presents the individual (one second) exposure rate measurements.

The Pearson's Correlation Coefficient (R^2) is a measure of the dependence between two variables, and is expressed as a value between -1 and +1 where +1 is a positive correlation, 0 is no correlation, and -1 is a negative correlation. The best predictive relationship between the measurements is linear with a R^2 of 0.9989, indicating a strong, positive correlation. The root mean square error and p-value for the model are 0.192959 and less than 0.0001, respectively; these parameters are not DQOs and are included only as information.

The following equation is the linear regression (shown in **Figure 10**) between the mean exposure rate and gamma count rate results in Table 7 that was generated using MS Excel:

$$\text{Exposure Rate } (\mu R/h) = 5\times10^{-4} \times \text{Gamma Count Rate (cpm)} + 6.4064$$

Figure 11 presents the exposure rates predicted from the gamma count rate measurements, the spatial and numerical distribution of which mirror those depicted in Figure 4.

Tables 8 and 9 present summary statistics for the predicted exposure rates in the three Background Reference Areas and AUM, respectively. The range of predicted exposure rates at:

- BG1 is 10.0 to 24.9 µR/h, with a mean and median of 12.4 and 11.4 µR/h, respectively
- BG2 is 9.1 to 10.9 µR/h, with a mean and median of 10.0 µR/h
- BG3 is 9.7 to 12.3 µR/h, with a mean and median of 11.1 µR/h

The range of predicted exposure rates at the AUM is 9.4 to 37.3 µR/h, with a mean and median of 12.5 and 11.8 µR/h, respectively.

Table 7. Co-located gamma count rate and exposure rate measurements.

Location	Gamma Count Rate (cpm)	Exposure Rate (µR/h)
S220-C01-001	8,526	10.7
S220-C02-001	23,441	18.8
S220-C03-001	33,160	23.4
S220-C04-001	17,906	15.7
S220-C05-001	12,548	12.9

Notes:
cpm = counts per minute
µR/h = microRoentgens per hour

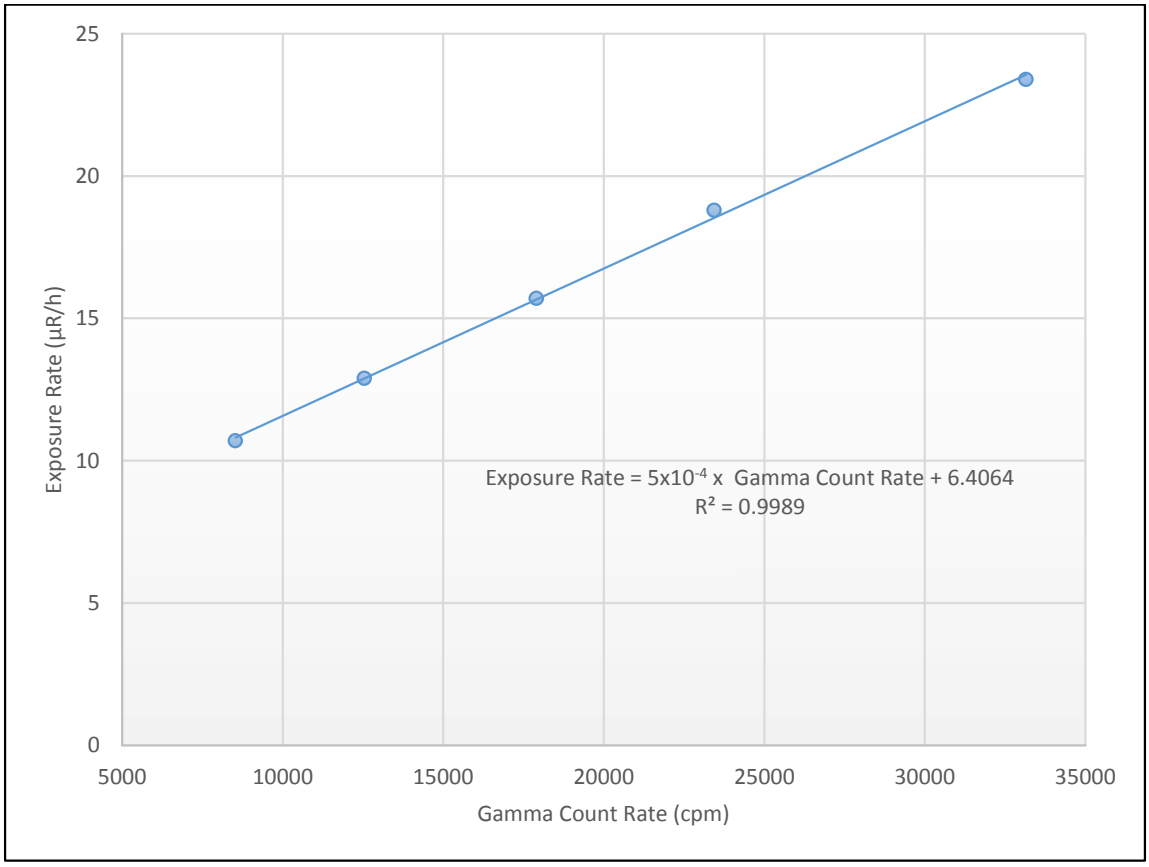

Figure 10. Correlation of gamma count rates and exposure rates.

Table 8. Predicted exposure rates in potential Background Reference Areas.

Potential Background Reference Area	BG1	BG2	BG3
Parameter	**Exposure Rate (µR/h)**		
n	310	186	474
Minimum	10.0	9.1	9.7
Maximum	24.9	10.9	12.3
Mean	12.4	10.0	11.1
Median	11.4	10.0	11.1
Standard Deviation	2.7	0.3	0.4

Notes:
BG1 = Background Reference Area 1
BG2 = Background Reference Area 2
BG3 = Background Reference Area 3
µR/h = microRoentgens per hour

Table 9. Predicted exposure rates in the Survey Area.

Parameter	Exposure Rate (µR/h)
n	21,694
Minimum	9.4
Maximum	37.3
Mean	12.5
Median	11.8
Standard Deviation	2.4

Notes:
µR/h = microRoentgens per hour

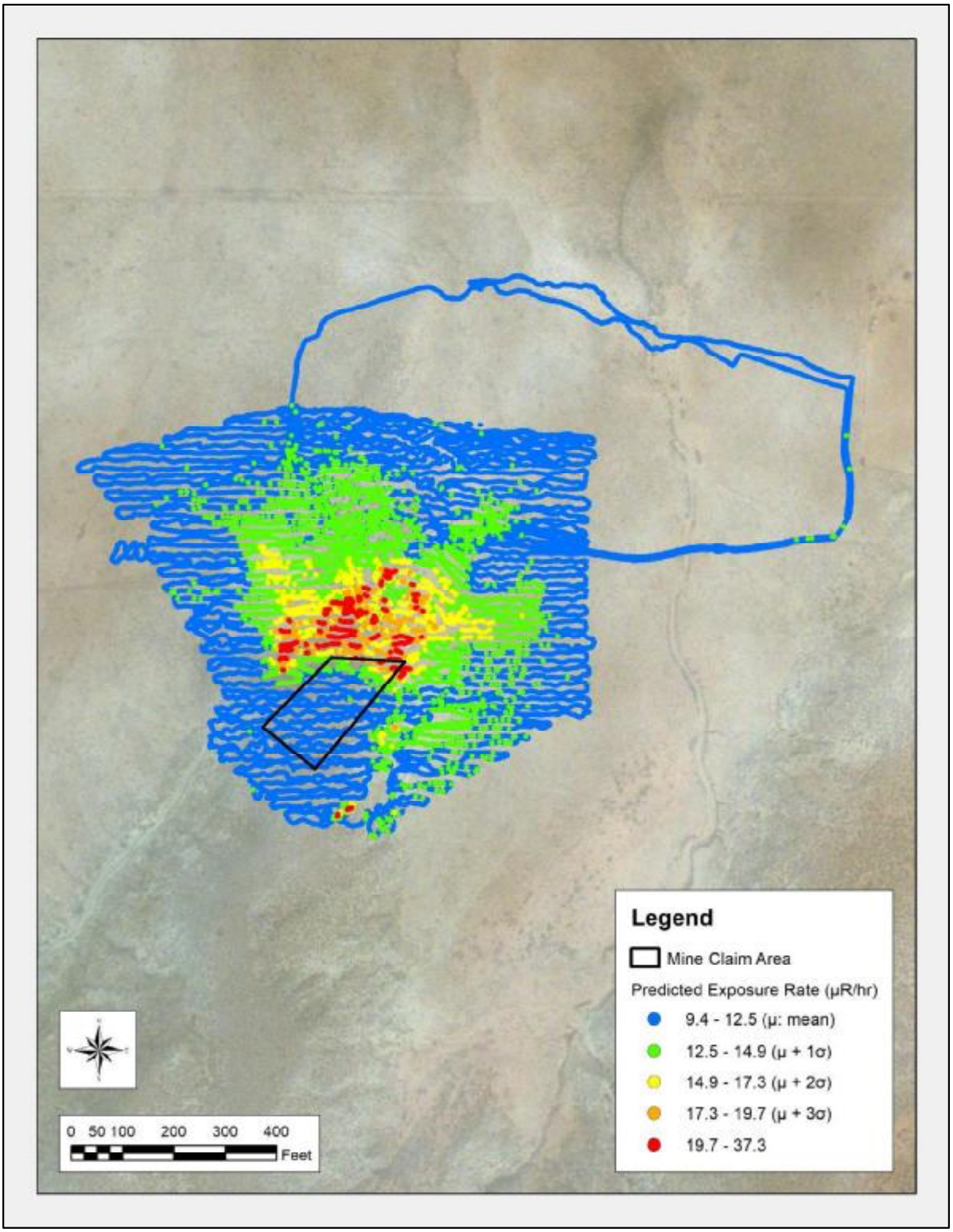

Figure 11. Predicted exposure rates in the Survey Area.

4.0 Deviations to RSE Work Plan

The RSE Work Plan specifies that the comparison of gamma count rates and radium concentrations in surface soils was to occur in 900 square foot areas. Field personnel adjusted the areas as necessary, to minimize the variability of gamma count rates observed, particularly where the spatial distribution of waste rock was heterogeneous.

5.0 Conclusions

The findings of the RSE pertaining to these activities are:

- The horizontal extent and magnitude of mining-related materials were delineated sufficiently to support additional characterization of the subsurface.

- Elevated count rates were observed largely on naturally occurring rock outcrops situated north of the mine claim.

- Three potential Background Reference Areas were established.

- The relationship between gamma count rates and concentrations of radium-226 in surface soils (0 to 0.5 ft below ground surface) is described by a linear regression model:

  Radium-226 concentration (pCi/g) = 4×10^{-4} x (Gamma Count Rate [cpm]) – 1.3309

- The distribution of concentrations of radium-226 in surface soils predicted using this model resembles a lognormal distribution. The values in the Survey Area range from 1.0 to 23.4, with a central tendency (median) of 3.0 pCi/g.

- The thorium series radionuclides do not appear to affect the prediction of concentrations of radium-226 from gamma count rates.

- The uranium series radionuclides appear not to be in secular equilibrium.

- The relationship between gamma count rates and exposure rates is described by a linear regression model:

  Exposure Rate (µR/h) = Gamma Count Rate (cpm) x 5×10^{-4} + 6.4064

- The distribution of exposure rates predicted using this model resembles a lognormal distribution. The values in the Survey Area range from 9.4 to 37.3, with a central tendency (median) of 11.8 µR/h.

6.0 References

ANSI, 1997. Radiation Protection Instrumentation Test and Calibration, Portable Survey Instruments, American National Standards Institute (ANSI) Standard N232A. June 20, 2014.

MWH, 2016. Navajo Nation AUM Environmental Response Trust, First Phase, Removal Site Evaluation Work Plan, October 24, 2016.

Stantec, 2018. Barton 3 Removal Site Evaluation Report, January 2018.

Appendix A Instrument calibration and completed function check forms

Certificate of Calibration

Calibration and Voltage Plateau

Environmental Restoration Group, Inc.
8809 Washington St NE, Suite 150
Albuquerque, NM 87113
(505) 298-4224
www.ERGoffice.com

Meter:	Manufacturer:	Ludlum	Model Number:	2221r	Serial Number:	254772
Detector:	Manufacturer:	Ludlum	Model Number:	44-10	Serial Number:	PR303727

- [x] Mechanical Check
- [x] F/S Response Check
- [x] Geotropism
- [x] Meter Zeroed
- [x] THR/WIN Operation
- [x] Reset Check
- [x] Audio Check
- [x] Battery Check (Min 4.4 VDC)

HV Check (+/- 2.5%): [x] 500 V [x] 1000 V [x] 1500 V

Cable Length: [ ] 39-inch [x] 72-inch [ ] Other:

Source Distance: [ ] Contact [x] 6 inches [ ] Other:

Source Geometry [x] Side [ ] Below [ ] Other:

Threshold: 10 mV

Window:

Barometric Pressure: 24.6 inches Hg

Temperature: 73 °F

Relative Humidity: 20 %

Instrument found within tolerance: [x] Yes [ ] No

Range/Multiplier	Reference Setting	"As Found Reading"	Meter Reading	Integrated 1-Min. Count	Log Scale Count
x 1000	400	400	400	398773	400
x 1000	100	100	100		100
x 100	400	400	400	39887	400
x 100	100	100	100		100
x 10	400	400	400	3988	400
x 10	100	100	100		100
x 1	400	400	400	399	400
x 1	100	100	100		100

High Voltage	Source Counts	Background
700	53957	
800	65946	
900	69049	
950	69687	
1000	70240	9925
1050	70288	
1100	71224	
1150	71563	
1200	71161	

Voltage Plateau

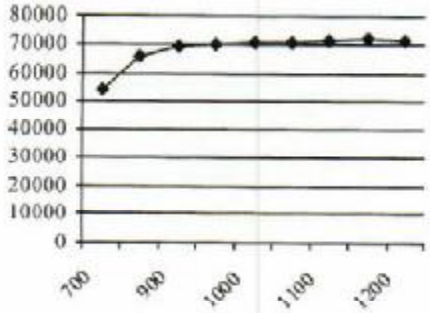

Comments: HV Plateau Scaler Count Time = 1-min. Recommended HV = 1000

Reference Instruments and/or Sources:

Ludlum pulser serial number: [ ] 97743 [x] 201932

[ ] Alpha Source: Th-230 @ 12,800 dpm (1/4/12) sn: 4098-03

[ ] Beta Source: Tc-99 @ 17,700 dpm (1/4/12) sn: 4099-03

Fluke multimeter serial number: [ ] 8749012

[x] Gamma Source Cs-137 @ 5.2 uCi (1/4/12) sn: 4097-03

[ ] Other Source:

Calibrated By: [signature]

Calibration Date: 1-20-16

Calibration Due 1-20-17

Reviewed By: [signature]

Date: 1/20/16

ERG Form ITC. 101.A

This calibration conforms to the requirements and acceptable calibration conditions of ANSI N323A - 1997

Certificate of Calibration

Calibration and Voltage Plateau

Environmental Restoration Group, Inc.
8809 Washington St NE, Suite 150
Albuquerque, NM 87113
(505) 298-4224
www.ERGoffice.com

Meter:	Manufacturer:	Ludlum	Model Number:	2221r	Serial Number:	196086
Detector:	Manufacturer:	Ludlum	Model Number:	44-10	Serial Number:	PR295014

✔ Mechanical Check ✔ THR/WIN Operation
✔ F/S Response Check ✔ Reset Check
✔ Geotropism ✔ Audio Check
✔ Meter Zeroed ✔ Battery Check (Min 4.4 VDC)

HV Check (+/- 2.5%): ✔ 500 V ✔ 1000 V ✔ 1500 V
Cable Length: 39-inch ✔ 72-inch Other:

Source Distance: Contact ✔ 6 inches Other:
Source Geometry: ✔ Side Below Other:

Threshold: 10 mV
Window:

Barometric Pressure: 24.78 inches Hg
Temperature: 74 °F
Relative Humidity: 20 %

Instrument found within tolerance: ✔ Yes No

Range/Multiplier	Reference Setting	"As Found Reading"	Meter Reading	Integrated 1-Min. Count	Log Scale Count
x 1000	400	400	400	399802	400
x 1000	100	100	100		100
x 100	400	400	400	39989	400
x 100	100	100	100		100
x 10	400	400	400	3999	400
x 10	100	100	100		100
x 1	400	400	400	400	400
x 1	100	100	100		100

High Voltage	Source Counts	Background
700	28456	
800	53330	
900	64430	
950	66209	
1000	68333	
1050	69077	
1100	69121	8924
1150	69973	
1200	70155	

Voltage Plateau

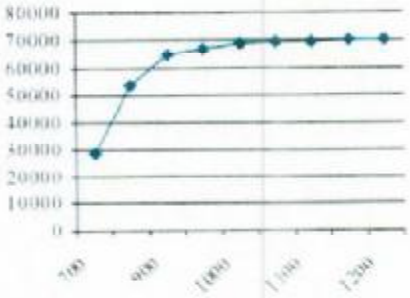

Comments: HV Plateau Scaler Count Time = 1-min. Recommended HV = 1100

Reference Instruments and/or Sources:

Ludlum pulser serial number: 97743 ✔ 201932
Alpha Source: Th-230 @ 12,800 dpm (1/4/12) sn: 4098-03
Beta Source: Tc-99 @ 17,700 dpm (1/4/12) sn: 4099-03

Fluke multimeter serial number: 87490128
✔ Gamma Source Cs-137 @ 5.2 uCi (1/4/12) sn: 4097-03
Other Source:

Calibrated By: [signature]
Calibration Date: 7/20/16 Calibration Due: 7/20/17

Reviewed By: [signature]
Date: 7/20/16

ERG Form ITC-101A

This calibration conforms to the requirements and acceptable calibration conditions of ANSI N323A-1997

Certificate of Calibration

Calibration and Voltage Plateau

Environmental Restoration Group, Inc.
8809 Washington St NE, Suite 150
Albuquerque, NM 87113
(505) 298-4224
www.ERGoffice.com

Meter:	Manufacturer:	Ludlum	Model Number:	2221r	Serial Number:	282971
Detector:	Manufacturer:	Ludlum	Model Number:	44-10	Serial Number:	PR320678

✔ Mechanical Check ✔ THR/WIN Operation
✔ F/S Response Check ✔ Reset Check
✔ Geotropism ✔ Audio Check
✔ Meter Zeroed ✔ Battery Check (Min 4.4 VDC)

HV Check (+/- 2.5%): ✔ 500 V ✔ 1000 V ✔ 1500 V
Cable Length: ☐ 39-inch ✔ 72-inch ☐ Other:

Barometric Pressure: 24.63 inches Hg
Temperature: 75 °F
Relative Humidity: 20 %

Source Distance: ☐ Contact ✔ 6 inches ☐ Other:
Threshold: 10 mV
Source Geometry: ✔ Side ☐ Below ☐ Other:
Window:

Instrument found within tolerance: ✔ Yes ☐ No

Range/Multiplier	Reference Setting	"As Found Reading"	Meter Reading	Integrated 1-Min. Count	Log Scale Count
x 1000	400	400	400	399936	400
x 1000	100	100	100		100
x 100	400	400	400	39984	400
x 100	100	100	100		100
x 10	400	400	400	3998	400
x 10	100	100	100		100
x 1	400	400	400	400	400
x 1	100	100	100		100

High Voltage	Source Counts	Background
700	57641	
800	65850	
900	68414	
950	68639	
1000	69410	9773
1050	69358	
1100	70301	
1150	81822	

Voltage Plateau

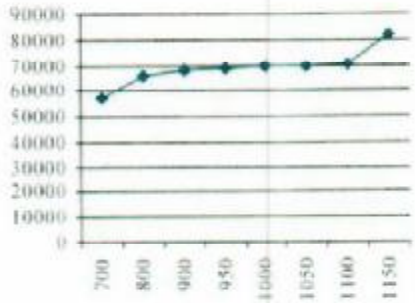

Comments: HV Plateau Scaler Count Time = 1-min. Recommended HV = 1000

Reference Instruments and/or Sources:

Ludlum pulser serial number: ☐ 97743 ✔ 201932
☐ Alpha Source: Th-230 sn: 4098-03 @ 12,800dpm/6,520 cpm (1/4/1
☐ Beta Source: Tc-99 sn: 4099-03 @ 17,700dpm/11,100cpm (1/4/12

Fluke multimeter serial number: ☐ 87490128
☐ Gamma Source Cs-137 @ 5.2 uCi (1/4/12) sn: 4097-03
☐ Other Source:

Calibrated By:

Calibration Date: 3-13-17 Calibration Due: 3-13-18

Reviewed By:

Date: 14 March 2017

ERG Form ITC. 101.A

This calibration conforms to the requirements and acceptable calibration conditions of ANSI N323A - 1997

Certificate of Calibration

Calibration and Voltage Plateau

Environmental Restoration Group, Inc.
8809 Washington St NE, Suite 150
Albuquerque, NM 87113
(505) 298-4224
www.ERGoffice.com

Meter:	Manufacturer:	Ludlum	Model Number:	2221r	Serial Number:	196086
Detector:	Manufacturer:	Ludlum	Model Number:	44-10	Serial Number:	PR295014

- ✔ Mechanical Check
- ✔ F/S Response Check
- ✔ Geotropism
- ✔ Meter Zeroed
- ✔ THR/WIN Operation
- ✔ Reset Check
- ✔ Audio Check
- ✔ Battery Check (Min 4.4 VDC)

HV Check (+/- 2.5%): ✔ 500 V ✔ 1000 V ✔ 1500 V

Cable Length: ☐ 39-inch ✔ 72-inch ☐ Other:

Source Distance: ☐ Contact ✔ 6 inches ☐ Other:

Source Geometry: ✔ Side ☐ Below ☐ Other:

Threshold: 10 mV

Window:

Barometric Pressure: 24.27 inches Hg

Temperature: 78 °F

Relative Humidity: 20 %

Instrument found within tolerance: ✔ Yes ☐ No

Range/Multiplier	Reference Setting	"As Found Reading"	Meter Reading	Integrated 1-Min. Count	Log Scale Count
x 1000	400	400	400	399386	400
x 1000	100	100	100		100
x 100	400	400	400	39949	400
x 100	100	100	100		100
x 10	400	400	400	3995	400
x 10	100	100	100		100
x 1	400	400	400	399	400
x 1	100	100	100		100

High Voltage	Source Counts	Background
700	28235	
800	52834	
900	64481	
950	66468	
1000	67321	
1050	69009	
1100	69981	9079
1150	69564	
1200	70538	

Voltage Plateau

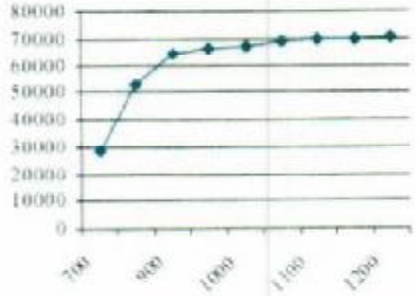

Comments: HV Plateau Scaler Count Time = 1-min. Recommended HV = 1100

Reference Instruments and/or Sources:

Ludlum pulser serial number: ☐ 97743 ✔ 201932

☐ Alpha Source: Th-230 @ 12,800 dpm (1/4/12) sn: 4098-03

☐ Beta Source: Tc-99 @ 17,700 dpm (1/4/12) sn: 4099-03

Fluke multimeter serial number: ☐ 87490128

✔ Gamma Source Cs-137 @ 5.2 uCi (1/4/12) sn: 4097-03

☐ Other Source:

Calibrated By:

Reviewed By:

Calibration Date: ~~3 March 17~~ 2/28/17 Calibration Due: ~~2 March 18~~ 2/28/18

Date: 3/1/17

ERG Form ITC.101.A

This calibration conforms to the requirements and acceptable calibration conditions of ANSI N323A - 1997

Certificate of Calibration

Calibration and Voltage Plateau

Environmental Restoration Group, Inc.
8809 Washington St NE, Suite 150
Albuquerque, NM 87113
(505) 298-4224
www.ERGoffice.com

Meter:	Manufacturer:	Ludlum	Model Number:	2221r	Serial Number:	254772
Detector:	Manufacturer:	Ludlum	Model Number:	44-10	Serial Number:	PR303727

- ✔ Mechanical Check
- ✔ F/S Response Check
- ✔ Geotropism
- ✔ Meter Zeroed
- ✔ THR/WIN Operation
- ✔ Reset Check
- ✔ Audio Check
- ✔ Battery Check (Min 4.4 VDC)

HV Check (+/- 2.5%): ✔ 500 V ✔ 1000 V ✔ 1500 V

Cable Length: ☐ 39-inch ✔ 72-inch ☐ Other:

Barometric Pressure: 24.24 inches Hg

Source Distance: ☐ Contact ✔ 6 inches ☐ Other:

Threshold: 10 mV

Temperature: 78 °F

Source Geometry: ✔ Side ☐ Below ☐ Other:

Window:

Relative Humidity: 20 %

Instrument found within tolerance: ✔ Yes ☐ No

Range/Multiplier	Reference Setting	"As Found Reading"	Meter Reading	Integrated 1-Min. Count	Log Scale Count
x 1000	400	400	400	399859	400
x 1000	100	100	100		100
x 100	400	400	400	39991	400
x 100	100	100	100		100
x 10	400	400	400	4001	400
x 10	100	100	100		100
x 1	400	400	400	400	400
x 1	100	100	100		100

High Voltage	Source Counts	Background
700	52821	
800	65213	
900	68644	
950	69245	
1000	69492	9111
1050	69792	
1100	70472	
1150	71183	
1200	70571	

Voltage Plateau

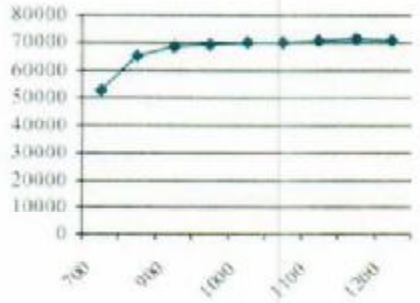

Comments: HV Plateau Scaler Count Time = 1-min. Recommended HV = 1000

Reference Instruments and/or Sources:

Ludlum pulser serial number: ☐ 97743 ✔ 201932

☐ Alpha Source: Th-230 @ 12,800 dpm (1/4/12) sn: 4098-03

☐ Beta Source: Tc-99 @ 17,700 dpm (1/4/12) sn: 4099-03

Fluke multimeter serial number: ☐ 87490128

✔ Gamma Source Cs-137 @ 5.2 uCi (1/4/12) sn: 4097-03

☐ Other Source:

Calibrated By:

Reviewed By:

Calibration Date: 2/28/17 ~~2 March 17~~

Calibration Due: 2/28/18 ~~2 March 18~~

Date: 3-1-17

ERG Form ITC. 10LA

This calibration conforms to the requirements and acceptable calibration conditions of ANSI N323A - 1997

Certificate of Calibration

Calibration and Voltage Plateau

Environmental Restoration Group, Inc.
8809 Washington St NE, Suite 150
Albuquerque, NM 87113
(505) 298-4224
www.ERGoffice.com

Meter: Manufacturer:	Ludlum	Model Number:	2221r	Serial Number:	254757
Detector: Manufacturer:	Ludlum	Model Number:	44-10	Serial Number:	PR292690

☐ Mechanical Check ☐ THR/WIN Operation
☐ F/S Response Check ☐ Reset Check
☐ Geotropism ☐ Audio Check
☐ Meter Zeroed ☐ Battery Check (Min 4.4 VDC)

HV Check (+/- 2.5%): ☐ 500 V ☐ 1000 V ☐ 1500 V
Cable Length: ☐ 39-inch ☑ 72-inch ☐ Other:

Source Distance: ☐ Contact ☑ 6 inches ☐ Other:
Source Geometry: ☑ Side ☐ Below ☐ Other:

Threshold: 10 mV
Window:

Barometric Pressure: 24.75 inches Hg
Temperature: 75 °F
Relative Humidity: 26 %

Instrument found within tolerance: ☑ Yes ☐ No

Range/Multiplier	Reference Setting	"As Found Reading"	Meter Reading	Integrated 1-Min. Count	Log Scale Count
x 1000	400				
x 1000	100				
x 100	400				
x 100	100				
x 10	400				
x 10	100				
x 1	400				
x 1	100				

See Ludlum Cal Sheet

High Voltage	Source Counts	Background
700	48461	
800	62632	
900	66021	
950	67593	
1000	67720	9478
1050	67893	
1100	68340	
1150	68592	
1200	68684	

Voltage Plateau

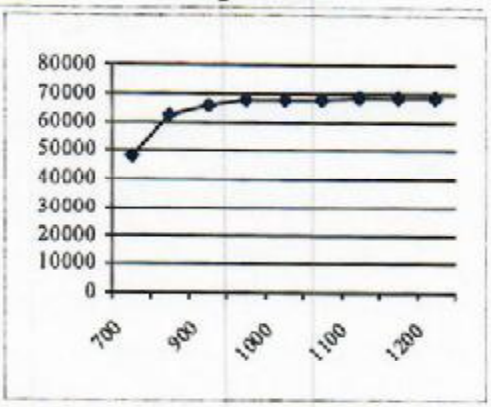

Comments: Comments: HV Plateau Scaler Count Time = 1-min. Recommended HV = 1000

Reference Instruments and/or Sources:

Ludlum pulser serial number: ☐ 97743 ☑ 201932
Fluke multimeter serial number: ☐ 87490128
☐ Alpha Source: Th-230 sn: 4098-03@12,800dpm/6,520 cpm (1/4/12)
☑ Gamma Source Cs-137 @ 5.2 uCi (1/4/12) sn: 4097-03
☐ Beta Source: Tc-99 sn: 4099-03@17,700dpm/11,100cpm(1/4/12)
☐ Other Source:

Calibrated By: [signature] Calibration Date: 8-21-17 Calibration Due: 8-21-18

Reviewed By: [signature] Date: 08/21/17

ERG Form ITC. 101.A

This calibration conforms to the requirements and acceptable calibration conditions of ANSI N323A - 1997

www.ludlums.com

Scientific and Industrial Instruments

CERTIFICATE OF CALIBRATION

501 Oak Street
325-235-5494
Sweetwater, TX 79556, U.S.A.

ACCREDITED
CERT # 4084.01

Customer ERG ORDER NO. 20315528/452181

Mfg. Ludlum Measurements, Inc. Model 2221 Serial No. 254757

Mfg. Model Serial No.

Cal. Date 25-Jul-17 Cal Due Date 25-Jul-18 Cal. Interval 1 Year Meterface 202-159

heck mark ☑ applies to applicable instr. and/or detector IAW mfg. spec. T. 74 °F RH 47 % Alt 706.0 mm Hg

☐ New Instrument Instrument Received ☐ Within Toler. +-10% ☐ 10-20% ☐ Out of Tol. ☑ Requiring Repair ☐ Other-See comments

☑ Mechanical ck. ☑ Meter Zeroed ☐ Background Subtract ☑ Input Sens. Linearity
☑ F/S Resp. ck ☑ Reset ck. ☑ Window Operation ☑ Geotropism
☑ Audio ck. ☐ Alarm Setting ck. ☑ Batt. ck.

☑ Calibrated in accordance with LMI SOP 14.8 ☐ Calibrated in accordance with LMI SOP 14.9

ıstrument Volt Set 1500 V Input Sens. 10 mV Det. Oper. V at mV Threshold Dial Ratio 100 = 10 mV

☐ HV Readout (2 points) Ref./Inst. 500 / 500 V Ref./Inst. 1500 / 1502 V

COMMENTS:

Calibrated with 39" cable.
Calibrated with Window in "OUT" position.
Firmware: 261027

amma Calibration: GM detectors positioned perpendicular to source except for M 44-9 in which the front of probe faces source.

RANGE/MULTIPLIER	REFERENCE CAL. POINT	INSTRUMENT REC'D "AS FOUND READING"	INSTRUMENT METER READING*
X 1000	400 Kcpm	N/A	400
X 1000	100 Kcpm		100
X 100	40 Kcpm		40
X 100	10 Kcpm		10
X 10	4 Kcpm		40
X 10	1 Kcpm		10
X 1	400 cpm		40
X 1	100 cpm		10

*Uncertainty within ± 10% C.F. within ± 20% ALL Range(s) Calibrated Electronically

	REFERENCE CAL. POINT	INSTRUMENT RECEIVED	INSTRUMENT METER READING*		REFERENCE CAL. POINT	INSTRUMENT RECEIVED	INSTRUMENT METER READING*
Digital Readout	400 Kcpm	N/A	3995 (0)	Log Scale	500 Kcpm	N/A	500 Kcpm
	40 Kcpm		3995		50 Kcpm		50
	4 Kcpm		400		5 Kcpm		5
	400 cpm		40		500 cpm		500 cpm
	40 cpm		4		50 cpm		50

.udlum Measurements, Inc. certifies that the above instrument has been calibrated by standards traceable to the National Institute of Standards and Technology, or to the calibration facilities of other International Standards Organization members, or have been derived from accepted values of natural physical constants or have been derived by the ratio type of calibration techniques. The calibration system conforms to the requirements of ANSI/NCSL Z540-1-1994 and ANSI N323-1978 ISO/IE 17025:2005(E) State of Texas Calibration License No. LO-1963

Reference Instruments and/or Sources: Cs-137 S/N: ☐ 059 ☐ 2171CP ☐ 2281CP ☐ 720 ☐ 734 ☐ 761 ☐ 1131 ☐ 1818 ☐ 1896 ☐ 1909 ☐ 1910CP ☐ 2024/2521
☐ 5717CO ☐ 5719CO ☐ 60646 ☐ 70897 ☐ 73410 ☐ E552 ☐ G112 ☐ 2166CP ☐ S-364 ☐ S-1054 ☐ T10081 ☐ T10082 Neutron Am-241 Be ☐ T-304 Ra-226 ☐ Y962

☐ Alpha S/N ☐ Beta S/N ☐ Other

☑ m 500 S/N 201934 ☐ Oscilloscope S/N ☑ Multimeter S/N 92780460

Calibrator Josie Ruiz Josie Ruiz Title Technician Date 25 July 17

QC'd By Title Service Dept QC Date 26 Jul 17

This certificate shall not be reproduced except in full, without the written approval of Ludlum Measurements, Inc.

AC Inst. Only ☐ Passed Dielectric (Hi-Pot) and Continuity Test ☐ Failed:

Certificate of Calibration

Calibration and Voltage Plateau

Environmental Restoration Group, Inc.
8809 Washington St NE, Suite 150
Albuquerque, NM 87113
(505) 298-4224
www.ERGoffice.com

Meter:	Manufacturer:	Ludlum	Model Number:	2221r	Serial Number:	138368
Detector:	Manufacturer:	Ludlum	Model Number:	44-10	Serial Number:	PR355763

- ☑ Mechanical Check
- ☑ F/S Response Check
- ☑ Geotropism
- ☑ Meter Zeroed
- ☑ THR/WIN Operation
- ☑ Reset Check
- ☑ Audio Check
- ☑ Battery Check (Min 4.4 VDC)

HV Check (+/- 2.5%): ☑ 500 V ☑ 1000 V ☑ 1500 V

Cable Length: ☐ 39-inch ☑ 72-inch ☐ Other:

Source Distance: ☐ Contact ☑ 6 inches ☐ Other:

Source Geometry: ☑ Side ☐ Below ☐ Other:

Threshold: 10 mV

Window:

Barometric Pressure: 24.75 inches Hg

Temperature: 76 °F

Relative Humidity: 20 %

Instrument found within tolerance: ☑ Yes ☐ No

Range/Multiplier	Reference Setting	"As Found Reading"	Meter Reading	Integrated 1-Min. Count	Log Scale Count
x 1000	400	400	400	398875	400
x 1000	100	100	100		100
x 100	400	400	400	39883	400
x 100	100	100	100		100
x 10	400	400	400	3988	400
x 10	100	100	100		100
x 1	400	400	400	398	400
x 1	100	100	100		100

High Voltage	Source Counts	Background
700	62275	
800	68049	
900	69726	
950	70112	9509
1000	70068	
1050	71042	
1100	77619	

Voltage Plateau

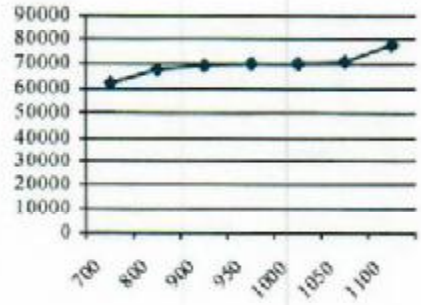

Comments: Comments: HV Plateau Scaler Count Time = 1-min. Recommended HV = 950

Reference Instruments and/or Sources:

Ludlum pulser serial number: ☐ 97743 ☑ 201932

Fluke multimeter serial number: ☐ 87490128

☐ Alpha Source: Th-230 sn: 4098-03@12,800dpm/6,520 cpm (1/4/12)

☑ Gamma Source Cs-137 @ 5.2 uCi (1/4/12) sn: 4097-03

☐ Beta Source: Tc-99 sn: 4099-03@17,700dpm/11,100cpm(1/4/12)

☐ Other Source:

Calibrated By: [signature]

Calibration Date: 9/17/17

Calibration Due: 9-17-18

Reviewed By: T. [signature]

Date: 09/08/17

ERG Form ITC. 101.A

This calibration conforms to the requirements and acceptable calibration conditions of ANSI N323A - 1997

K&S Associates, Inc.
1926 Elm Tree Drive
Nashville, Tennessee 37210-3718
Phone 800-522-2325 Fax 615-871-0856

ACCREDITED
CALIBRATION CERT #1866.01

CALIBRATION REPORT

SUBMITTED BY: ERG
8809 Washington Street Northeast
Suite 150
Albuquerque, NM 87113

INSTRUMENT: Reuter Stokes RSS-131, #07J00KM1

REPORT NUMBER: 161866
TEST NUMBER(S) M161588
REPORT DATE: June 29, 2016

The CALIBRATION COEFFICIENTS contained in this report were obtained by intercomparison with instruments calibrated by, or directly traceable to, the National Institute of Standards and Technology (NIST). K• S Associates, Inc. is licensed by the State of Tennessee (R-19075-G97, R-19136-B00) to perform calibrations, and is recognized by the Health Physics Society (HPS) as an ACCREDITED INSTRUMENT CALIBRATION LABORATORY. As part of the accreditation K • S participates in a measurement assurance program conducted by the HPS and NIST. K • S also certifies that the calibration was performed using quality policies, methods and procedures that meet or exceed the requirements of ISO/IEC 17025:2005.

This laboratory is accredited by the American Association for Laboratory Accreditation (A2LA) and the results shown in this report have been determined in accordance with the laboratory's terms of accreditation unless stated otherwise in this report

The CALIBRATION COEFFICIENTS stated herein are valid under the conditions specified. It is the instrument user's responsibility to perform the appropriate constancy tests prior to shipment and after return from calibration. It is also the responsibility of the user to assure that the interpretation of the information in this report is consistent with that intended by K • S Associates, Inc.

This report may not be reproduced except in full without the written permission of K• S Associates, Inc.

K&S Associates, Inc
Nashville, Tennessee 37210-3718

ACCREDITED

CALIBRATION CERTIFICATE

Calibration Date: 6/27/2016 Report Number: 161866 Test Number: M161588

K&S certifies that the environmental radiation monitor identified below has been calibrated for radiation measurement using collimated radiation sources whose output has been calibrated with instruments calibrated by or directly traceable to the National Institute of Standards and Technology. K&S is accredited by the American Association for Laboratory Accreditation to perform environmental level calibrations and further certifies that the calibration was performed using accredited policies and procedures (SI 25) that meet or exceed the requirements of ISO/IEC 17025:2005.

Sensor Type: 100 mR/h

Serial Number: 07J00KM1

Average Calibration Coefficient for the range of 0.012 mR/h – 0.220 mR/h*:
1.02 mR/"mR" reading
(Measured at 4 points)

Calibration Coefficient for the 50.0 mR/h point*:
1.12 mR/"mR" reading

Calibration Coefficient for the 80.0 mR/h point*:
1.10 mR/"mR" reading

Found RAC: 2.169e-8

*Multiply the reading in **mR/h** by the Calibration Coefficient to obtain true **mR/h**.

Calibrated By: Richard Harrison Reviewed By: Angela Roper

Richard Harrison
Calibration Technician

Title: Calibration Technician Title: Calibration Physicist

Log: M-53 Page: 73

K&S Associates, Inc
Nashville, Tennessee 37210-3718

ACCREDITED
CALIBRATION CERT # 886.01

AS FOUND DATA
Reuter-Stokes Chamber Calibration

June 27, 2016 *Test Number* *M161588*

CHAMBER:

Mfgr: Reuter Stokes
Model: RSS-131
Serial: 07J00KM1

SUBMITTED BY:

ERG

Albuquerque, NM

ORIENTATION/CONDITIONS:

Serial number away from source

"True" background exposure rate of 6.7 uR/h, instrument reading was 0.0076 mR/h

ATMOSPHERIC COMMUNICATION: SEALED

POLARIZING POTENTIAL 401V

LEAKAGE: negligible

BEAM QUALITY				CALIBRATION		
BEAM		**EXPOSURE RATE**		**COEFFICIENT**	**UNCERT**	**LOG**
CsEn220	(11mCi)	0.22mR/h	N_x=	1.00 mR/h/rdg	11%	M-53 73
CsEn80	(11mCi)	0.08mR/h	N_x=	1.03 mR/h/rdg	11%	
CsEnv12	(1mCi)	0.012mR/h	N_x=	1.01 mR/h/rdg	11%	
CsEnv15	(1mCi)	0.015mR/h	N_x=	1.02 mR/h/rdg	11%	
Cs199m	(20 Ci)	50mR/h	N_x=	1.12 mR/h/rdg	8%	
Cs252m	(20 Ci)	80mR/h	N_x=	1.10 mR/h/rdg	8%	

Comments Batt: 6.1V, Temp: 24.6 deg C. K&S Environment: Temp:21 deg C , RH 59%, Press: 752 mmHg;
Report Number: 161866
Refer to Appendix I of this report for details on PIC ionization chamber calibrations. Procedure: SI 25
RAC Found: 2.169e-8

Calibrated By Richard Hardison **Reviewed By:**
Title: Calibration Technician **Title:** Calibration Physicist
Checked By: **Prepared By:** REH

Form RSS

ERG

Single-Channel Function Check Log

Environmental Restoration Group, Inc.
8809 Washington St. NE, Suite 150
Albuquerque, NM 87113
(505) 298-4224

METER	
Manufacturer:	Ludlum
Model:	2221
Serial No.:	254772
Cal. Due Date:	7-19-17

DETECTOR	
Manufacturer:	Ludlum
Model:	44-10
Serial No.:	PR303727
Cal. Due Date:	7-19-17

Comments:
NNERT

Source: Cs-137 Activity: 5.12 uCi Source Date: 6-16-94 Distance to Source: 6 inches

Serial No.: 333-94 Emission Rate: NA cpm/emissions

Date	Time	Battery	High Voltage	Threshhold	Source Counts	BKG Counts	Net Counts	Initials	Note(s): Project Reference Point,
9-27-16	1126	6.1	1002	99	45988	6844	39144	NW	NA-0904
9-27-16	1619	5.9	997	99	44136	6788	37348	NW	NA-0904
9-28-16	1022	5.9	1001	99	44612	6242	38370	NW	Comfort Suites Parking lot
9-28-16	1754	5.9	1000	99	43583	6742	36841	NW	NA-0928
9-29-16	0936	5.9	1001	100	44695	5574	39121	NW	Comfort Suites Parking Lot
9-29-16	1600	5.8	1002	99	46024	6760	39264	NW	NA-0928
9-30-16	0920	5.8	1002	99	44958	5748	39210	NW	NA-0904
9-30-16	1436	5.7	998	99	44138	6240	37898	NW	NA-0504
10-1-16	0913	5.7	1002	100	43656	5047	38609	NW	Oak 124/125
10-1-16	1605	5.6	995	99	43105	6275	36830	NW	Alonzo
10-3-16	0950	5.7	1001	99	44914	5611	39303	NW	Barton 3
10-3-16	1220	5.6	998	99	45823	5620	40105	NW	Barton 3

Reviewed by: [signature] Review Date: 11-29-16

ERG

Single-Channel Function Check Log

Environmental Restoration Group, Inc.
8809 Washington St. NE, Suite 150
Albuquerque, NM 87113
(505) 298-4224

METER	
Manufacturer:	Ludlum
Model:	44-10
Serial No.:	196086
Cal. Due Date:	7-9-17

DETECTOR	
Manufacturer:	Ludlum
Model:	2221
Serial No.:	PR295014
Cal. Due Date:	7-9-17

Comments:
NNGRT

Source: Cs-137 Activity: 5.12 uCi Source Date: 6-16-94 Distance to Source: 6 Inches

Serial No.: 333-94 Emission Rate: NA cpm/emissions

Date	Time	Battery	High Voltage	Threshhold	Source Counts	BKG Counts	Net Counts	Initials	Note(s): Project Reference Points
9-27-16	1121	5.7	1100	100	45851	6762	39089	NW	NA-0904
9-27-16	1619	5.6	1094	99	45492	6313	39179	NW	NA-0904
9-28-16	1026	5.7	1100	100	44929	6287	38642	NW	NA-0904
9-28-16	1754	5.6	1098	100	44643	6434	38209	NW	Comfort Suites Parking Lot
9-29-16	0940	5.6	1100	99	43453	5654	37799	NW	NA-0928
9-29-16	1603	5.5	1101	100	44586	6525	38061	NW	Comfort Suites Parking Lot
9-30-16	0915	5.5	1102	100	44975	5236	39739	NW	NA-0928
9-30-16	1433	5.4	1096	100	44003	5827	38176	NW	NA-0904
10-1-16	0925	5.5	1102	100	42929	5140	37789	NW	Dock 124/125
10-1-16	1605	5.3	1092	100	44650	6271	38379	NW	Alonzo
10-3-16	0946	5.5	1100	100	43679	4995	38684	NW	Barton 3
10-3-16	1225	5.4	1099	100	45921	5361	40560	NW	Barton 3

Reviewed by: MA Review Date: 11/29/16

ERG

Single-Channel Function Check Log

Environmental Restoration Group, Inc.
8809 Washington St. NE, Suite 150
Albuquerque, NM 87113
(505) 298-4224

METER	
Manufacturer:	Ludlum
Model:	2221
Serial No.:	254772
Cal. Due Date:	7-19-17

DETECTOR	
Manufacturer:	Ludlum
Model:	44-10
Serial No.:	PR303727
Cal. Due Date:	7-19-17

Comments:
NNERT

Source: Cs-137 Activity: 5.12 uCi Source Date: 6-6-94 Distance to Source: 6 Inches

Serial No.: 333-94 Emission Rate: NA cpm/emissions

Date	Time	Battery	High Voltage	Threshhold	Source Counts	BKG Counts	Net Counts	Initials	Note(s): Project reference points
10-11-16	0927	5.5	1002	99	45999	6141	39858	NW	NA-0904
10-11-16	1720	5.5	998	99	48630	6576	42054	NW	Comfort Suites Parking Lot
10-12-16	0858	5.5	1003	99	44780	5306	39474	NW	NA-0928
10-12-16	1618	5.5	998	99	43779	6289	37490	NW	Comfort Suites Parking Lot
10-13-16	0911	5.5	1003	99	46726	7375	39351	NW	Alonzo
10-13-16	1910	5.5	990	99	45235	6618	38617	NW	Comfort Suites Parking Lot
10-14-16	0926	5.5	1004	99	45657	7242	38415	NW	Barton 3
10-14-16	1540	5.4	998	99	44751	6480	38271	NW	Comfort Suites Parking Lot
10-15-16	0927	5.5	1001	99	45697	6933	38764	NW	Henry Blackwater
10-15-16	1324	5.4	996	99	42528	4945	37583	NW	Hat Rock Inn Parking Lot
a 10-24-16	0800	6.2	1005	100	48507	9268	39239	NW	Boyd Tisi
10-24-16	1207	6.0	1001	99	46290	8126	38164	NW	Boyd Tisi

a. Changed battery

Reviewed by: MM Review Date: 11/29/16

(2)

ERG

Single-Channel Function Check Log

Environmental Restoration Group, Inc.
8809 Washington St. NE, Suite 150
Albuquerque, NM 87113
(505) 298-4224

METER	
Manufacturer:	Ludlum
Model:	44-10
Serial No.:	196086
Cal. Due Date:	7-9-17

DETECTOR	
Manufacturer:	Ludlum
Model:	2221
Serial No.:	PR 285014
Cal. Due Date:	7-9-17

Comments:
NNERS

Source: Cs-137 Activity: 5.12 uCi Source Date: 6-16-94 Distance to Source: 6 Inches

Serial No.: 333-54 Emission Rate: NA cpm/emissions

Date	Time	Battery	High Voltage	Threshhold	Source Counts	BKG Counts	Net Counts	Initials	Note(s): Project Reference Points
10-4-16	0936	5.5	1102	100	46804	6042	40762	NW	Tsosie 1
10-4-16	1720	5.4	1106	100	46032	6898	39134	NW	Comfort Suites Parking Lot
10-5-16	0622	5.4	1109	101	45794	6834	38960	NW	Comfort Suites Parking Lot
10-5-16	1348	5.3	1097	99	46608	6021	40587	NW	Tsosie 1
10-6-16	0904	5.4	1103	100	44521	6273	38248	NW	Comfort Suites Parking Lot
10-6-16	1718	5.3	1099	100	45178	6311	38867	NW	Comfort Suites Parking Lot
10-7-16	0859	5.4	1104	100	44101	5226	38875	NW	Oak 124/125
10-7-16	1633	5.4	1098	99	44930	6832	38098	NW	Comfort Suites Parking Lot
10-8-16	0908	5.4	1104	100	45110	6201	38909	NW	Red Valley Intersection
10-8-16	1658	5.3	1098	99	45810	6196	39614	NW	Comfort Suites Parking Lot
10-12-16	1331	5.4	1099	99	46496	6519	39977	NW	Barton 3
10-12-16	1614	5.4	1097	100	44509	6060	38449	NW	Comfort Suites Parking Lot

Reviewed by: MM Review Date: 11/29/16

ERG

Single-Channel Function Check Log

Environmental Restoration Group, Inc
8809 Washington St. NE, Suite 150
Albuquerque, NM 87113
(505)298-4224

METER	
Manufacturer:	Ludlum
Model:	2221
Serial No.:	282971
Cal. Due Date:	3-13-18

DETECTOR	
Manufacturer:	Ludlum
Model:	44-10
Serial No.:	PR320678
Cal. Due Date:	3-13-18

Comments:
NNEAF

Source: Cs-137 Activity: 4 uCi Source Date: 4-18-96 Distance to Source: 6 inches

Serial No.: 544-96 Emission Rate: NA cpm/emissions

Date	Time	Battery	High Voltage	Threshhold	Source Counts	BKG Counts	Net Counts	Initials	Note(s):
4-17-17	1312	5.9	1044	100	38292	6004	32268	NW	Barton 3
4-18-17	1356	5.9	1049	100	41042	8945	32097	NW	Claim 28
4-18-17	1636	5.8	1047	100	40713	9418	31295	NW	Claim 28
4-19-17	0821	5.9	1049	101	40983	9954	31029	NW	Claim 28
4-19-17	1350	5.7	1047	100	40955	9152	31803	NW	Claim 28
4-20-17	0919	5.9	1051	100	41485	9593	31892	NW	Claim 28
4-20-17	1515	5.7	1046	100	40970	9549	31421	NW	Claim 28

4-24-17

Reviewed by: MM Review Date: 10/9/17

ERG

Single-Channel Function Check Log

Environmental Restoration Group, Inc
8809 Washington St. NE Suite 150
Albuquerque, NM 87113
(505) 298-4224

METER	
Manufacturer:	Ludlum
Model:	2221
Serial No.:	196086
Cal. Due Date:	2-28-17

DETECTOR	
Manufacturer:	Ludlum
Model:	44-10
Serial No.:	PR 295019
Cal. Due Date:	2-28-17

Comments:
NNERT

Source: Cs - 137 Activity: 4 uCi Source Date: 4-18-96 Distance to Source: 6 inches

Serial No.: 544-96 Emission Rate: ND cpm/emissions

Date	Time	Battery	High Voltage	Threshhold	Source Counts	BKG Counts	Net Counts	Initials	Note(s):
4-11-17	0932	5.5	1100	100	36776	5404		NW	NA-0928
4-11-17	1601	5.4	1094	100	36796	5031		NW	NA-0904 (upper)
4-12-17	0850	5.4	1100	101	37067	5050		NW	NA-0928
4-12-17	1510	5.3	1092	100	36453	5524		NW	NA-0904
4-13-17	0855	5.4	1101	101	36895	5793		NW	NA-0928
4-13-17	1648	5.3	1092	100	38816	5572		NW	NA-0904
4-15-17	0840	5.4	1100	101	37457	5291		NW	NA-0928
4-15-17	1612	5.2	1090	100	38092	6045		NW	Barton 3
4-17-17	0921	5.4	1101	101	38591	5561		NW	NA-0928
4-17-17	1317	5.3	1090	100	37050	5496		NW	Barton 3
4-18-17	1354	5.4	1098	101	40983	8497		NW	Claim 28
4-18-17	1642	5.2	1091	101	39900	8193		NW	Claim 28

Reviewed by: MM Review Date: 10/9/17

ERG

Single-Channel Function Check Log

Environmental Restoration Group, Inc
8809 Washington St. NE, Suite 150
Albuquerque, NM 87113
(505) 298-4224

METER	
Manufacturer:	Ludlum
Model:	2221
Serial No.:	254772
Cal. Due Date:	2-28-18

DETECTOR	
Manufacturer:	Ludlum
Model:	44-10
Serial No.:	PR303727
Cal. Due Date:	2-28-18

Comments:
NNERT -Drilling

Source: Cs-137 Activity: 4 uCi Source Date: 4-12-96 Distance to Source: 6 inches

Serial No.: 544-96 Emission Rate: NA cpm/emissions

Date	Time	Battery	High Voltage	Threshhold	Source Counts	BKG Counts	Net Counts	Initials	Note(s):
6-3-17	1008	5.4	997	99	38275	5551	32724	NW	NA-0928
6-3-17	1639	5.4	988	100	37983	5104	32879	NW	NA-0928
6-4-17	0840	5.4	997	100	38039	6284	31755	NW	NA-0928
6-4-17	1750	5.4	988	100	37818	6259	31559	NW	Home2 Suites lot
6-5-17	0840	5.4	995	99	35592	5885	29707	NW	NA-0928
6-5-17	1508	—	—	DID	NOT USE	—	—	NW	—
6-6-17	1105	5.3	989	100	37170	5887	31283	NW	Barton 3
6-6-17	1420	5.3	987	99	36952	6129	30823	NW	Barton 3
6-7-17	0903	5.4	996	100	38449	6477	31972	NW	Home2 Suites lot
6-7-17	1822	5.4	990	100	37233	6707	30526	NW	Barton 3
6-9-17	0949	5.4	994	100	36465	5687	30778	NW	Section 26
6-9-17	1640	5.4	984	99	36408	5695	30713	NW	Section 26

Reviewed by: Michael [illegible] Review Date: 11/06/17

ERG

Single-Channel Function Check Log

Environmental Restoration Group, Inc
8809 Washington St. NE, Suite 150
Albuquerque, NM 87113
(505) 298-4224

METER	
Manufacturer:	Ludlum
Model:	2221
Serial No.:	254757
Cal. Due Date:	~~8-21-18~~ NW 7-25-18

DETECTOR	
Manufacturer:	Ludlum
Model:	44-10
Serial No.:	PR292690
Cal. Due Date:	8-21-18

Comments:
NNERT

Source: Cs-137 Activity: 4 uCi Source Date: 4-18-96 Distance to Source: 6 inches

Serial No.: 544-96 Emission Rate: NA cpm/emissions

Date	Time	Battery	High Voltage	Threshhold	Source Counts	BKG Counts	Net Counts	Initials	Note(s):
9-12-17	0930	5.8	1003	114	37751	6287	31464	NW	Barton 3
9-12-17	1433	5.8	1003	111	37908	6408	31500	NW	Tsosie 1
9-13-17	0914	5.8	1007	110	37894	6629	31265	NW	Alonzo
9-13-17	1603	5.7	993	101	36184	5750	30434	NW	Barton 3
9-14-17	0903	5.8	1000	102	37308	6025	31283	NW	NA-0904
9-14-17	1250	5.8	996	102	36293	6018	30275	NW	NA-0904
9-15-17	0925	5.8	1002	104	35475	5289	30186	NW	Eunice Becenti
9-15-17	1725	5.8	999	105	36724	4764	31960	NW	Eunice Becenti
9-16-17	0908	5.8	1005	104	36645	5582	31063	NW	Eunice Becenti
9-16-17	1238	5.7	1001	106	37099	5588	31511	NW	Eunice Becenti @ asphalt road

Reviewed by: MM Review Date: 10/4/17

ERG

Single-Channel Function Check Log

Environmental Restoration Group, Inc.
8809 Washington St. NE, Suite 150
Albuquerque, NM 87113
(505) 298-4224

METER	
Manufacturer:	Ludlum
Model:	2221
Serial No.:	138368
Cal. Due Date:	9-7-18

DETECTOR	
Manufacturer:	Ludlum
Model:	44-10
Serial No.:	PR355763
Cal. Due Date:	9-7-18

Comments:
NNERT

Source: Cs-137 Activity: 4 uCi Source Date: 4-18-96 Distance to Source: 6 inches

Serial No.: 544-96 Emission Rate: NA cpm/emissions

Date	Time	Battery	High Voltage	Threshhold	Source Counts	BKG Counts	Net Counts	Initials	Note(s):
9-12-17	0914	5.4	950	101	36935	6331	30604	NW	Barton 3
9-12-17	1432	5.3	944	99	38043	6468	31575	NW	Tsosie 1
9-13-17	0906	5.4	951	99	37146	6538	30608	NW	Alonzo
9-13-17	1600	5.3	944	99	35587	5991	29596	NW	Barton 3
9-14-17	0909	5.4	950	100	36080	6176	29904	NW	NA-0404
9-14-17	1255	5.3	948	100	36099	5764	30335	NW	NA-0404
9-15-17	0920	5.4	954	101	35208	5551	29657	NW	Eunice Begaye
9-15-17	1729	5.3	957	109	35937	5261	30676	NW	Eunice Begaye
9-19-17	0831	5.4	958	105	36467	6034	30433	NW	Section 26 @ trailer
9-19-17	1453	5.3	946	99	44454	14748	29706	NW	Section 26 @ corral
9-20-17	0736	5.3	953	102	37676	6987	30689	NW	Mexican Hat
9-20-17	1611	5.2	947	100	36842	6252	30590	NW	Mexican Hat

Reviewed by: MM Review Date: 10/9/17

ERG

Single-Channel Function Check Log

Environmental Restoration Group, Inc.
8809 Washington St. NE, Suite 150
Albuquerque, NM 87113
(505) 298-4224

METER	
Manufacturer:	GE
Model:	RSS-131
Serial No.:	07300km1
Cal. Due Date:	6-29-17

DETECTOR	
Manufacturer:	SAME AS METER
Model:	
Serial No.:	
Cal. Due Date:	

Comments:
NNERT

Source: Cs-137 Activity: 5.12 uCi Source Date: 6-16-94 Distance to Source: Contact - housing

Serial No.: 333-94 Emission Rate: NA cpm/emissions

Date	Time	Battery	High Voltage	Threshhold	Source Counts (mR/h)	BKG Counts	Net Counts	Initials	Note(s): Project reference points
10-7-16	0545	~6.16	~400	~NA~	~26.7	~9.5	~17.2	NW	Comfort Suites Room - Farmington
10-7-16	2040	~6.16	~400	NA	~26.5	~8.7	~17.8	NW	Comfort Suites Room - Farmington
10-11-16	0634	~6.2	~400	NA	~25	~10.5	~14.5	NW	Comfort Suites Room - Farmington
10-11-16	1801	~6.3	~400	NA	~25.5	~10.1	~14.4	NW	Comfort Suites Room - Farmington
10-12-16	0548	~6.3	~400	NA	~26.5	~10	~16.5	NW	Comfort Suites Room - Farmington
10-12-16	1640	~6.3	~400	NA	~26.4	~10	~16.4	NW	Comfort Suites Room - Farmington
10-13-16	0608	~6.3	~400	NA	~27	~9.8	~17.2	NW	Comfort Suites Room - Farmington
10-13-16	1950	~6.3	~400	NA	~26.3	~9.5	~16.8	NW	Comfort Suites Room - Farmington
10-14-16	0630	~6.4	~400	NA	~26.4	~9.5	~16.4	NW	Comfort Suites Room - Farmington
10-14-16	1547	~6.2	~400	NA	~30	~12	~18	NW	Comfort Suites Room - Farmington
10-25-16	0539	~6.3	~400	NA	~29	~11	~18	NW	Best Western Room - Flagstaff
10-25-16	1255				DID NOT USE				

Reviewed by: MM Review Date: 11-29-16

Appendix B Exposure Rate Measurements

Date and Time	Exposure Rate (mR/h)	Location
10/14/2016 10:11	0.0532	Correlation Location 1
10/14/2016 10:11	0.0923	Correlation Location 1
10/14/2016 10:11	0.0795	Correlation Location 1
10/14/2016 10:11	0.0534	Correlation Location 1
10/14/2016 10:11	0.0339	Correlation Location 1
10/14/2016 10:12	0.0223	Correlation Location 1
10/14/2016 10:12	0.0165	Correlation Location 1
10/14/2016 10:12	0.0135	Correlation Location 1
10/14/2016 10:12	0.0122	Correlation Location 1
10/14/2016 10:12	0.0116	Correlation Location 1
10/14/2016 10:12	0.0111	Correlation Location 1
10/14/2016 10:12	0.0108	Correlation Location 1
10/14/2016 10:12	0.0106	Correlation Location 1
10/14/2016 10:12	0.0104	Correlation Location 1
10/14/2016 10:12	0.0104	Correlation Location 1
10/14/2016 10:13	0.0103	Correlation Location 1
10/14/2016 10:13	0.0103	Correlation Location 1
10/14/2016 10:13	0.0103	Correlation Location 1
10/14/2016 10:13	0.0105	Correlation Location 1
10/14/2016 10:13	0.0108	Correlation Location 1
10/14/2016 10:13	0.0105	Correlation Location 1
10/14/2016 10:13	0.0102	Correlation Location 1
10/14/2016 10:13	0.0103	Correlation Location 1
10/14/2016 10:13	0.0103	Correlation Location 1
10/14/2016 10:13	0.01	Correlation Location 1
10/14/2016 10:14	0.0103	Correlation Location 1
10/14/2016 10:14	0.0104	Correlation Location 1
10/14/2016 10:14	0.0104	Correlation Location 1
10/14/2016 10:14	0.0102	Correlation Location 1
10/14/2016 10:14	0.0099	Correlation Location 1
10/14/2016 10:14	0.01	Correlation Location 1
10/14/2016 10:14	0.0104	Correlation Location 1
10/14/2016 10:14	0.0108	Correlation Location 1
10/14/2016 10:14	0.0106	Correlation Location 1
10/14/2016 10:14	0.0108	Correlation Location 1
10/14/2016 10:15	0.0108	Correlation Location 1
10/14/2016 10:15	0.0106	Correlation Location 1
10/14/2016 10:15	0.0105	Correlation Location 1
10/14/2016 10:15	0.01	Correlation Location 1
10/14/2016 10:15	0.01	Correlation Location 1
10/14/2016 10:15	0.0104	Correlation Location 1
10/14/2016 10:15	0.0104	Correlation Location 1
10/14/2016 10:15	0.0105	Correlation Location 1
10/14/2016 10:15	0.0111	Correlation Location 1
10/14/2016 10:15	0.0117	Correlation Location 1
10/14/2016 10:16	0.0116	Correlation Location 1
10/14/2016 10:16	0.0116	Correlation Location 1
10/14/2016 10:16	0.0114	Correlation Location 1
10/14/2016 10:16	0.0109	Correlation Location 1
10/14/2016 10:16	0.0111	Correlation Location 1
10/14/2016 10:16	0.0117	Correlation Location 1
10/14/2016 10:16	0.0117	Correlation Location 1
10/14/2016 10:16	0.0114	Correlation Location 1
10/14/2016 10:16	0.0109	Correlation Location 1
10/14/2016 10:16	0.011	Correlation Location 1
10/14/2016 10:17	0.011	Correlation Location 1
10/14/2016 10:17	0.0109	Correlation Location 1

Date and Time	Exposure Rate (mR/h)	Location
10/14/2016 10:17	0.0109	Correlation Location 1
10/14/2016 10:17	0.0106	Correlation Location 1
10/14/2016 10:17	0.0108	Correlation Location 1
10/14/2016 10:17	0.0105	Correlation Location 1
10/14/2016 10:17	0.0105	Correlation Location 1
10/14/2016 10:17	0.0105	Correlation Location 1
10/14/2016 10:17	0.0106	Correlation Location 1
10/14/2016 10:17	0.0105	Correlation Location 1
10/14/2016 10:18	0.0104	Correlation Location 1
10/14/2016 10:18	0.0108	Correlation Location 1
10/14/2016 10:18	0.0109	Correlation Location 1
10/14/2016 10:18	0.011	Correlation Location 1
10/14/2016 10:18	0.0106	Correlation Location 1
10/14/2016 10:18	0.0105	Correlation Location 1
10/14/2016 10:18	0.0106	Correlation Location 1
10/14/2016 10:18	0.0108	Correlation Location 1
10/14/2016 10:18	0.0109	Correlation Location 1
10/14/2016 10:18	0.0111	Correlation Location 1
10/14/2016 10:19	0.0111	Correlation Location 1
10/14/2016 10:19	0.0111	Correlation Location 1
10/14/2016 10:19	0.011	Correlation Location 1
10/14/2016 10:19	0.0103	Correlation Location 1
10/14/2016 10:19	0.01	Correlation Location 1
10/14/2016 10:19	0.0104	Correlation Location 1
10/14/2016 10:19	0.0104	Correlation Location 1
10/14/2016 10:19	0.0102	Correlation Location 1
10/14/2016 10:19	0.0102	Correlation Location 1
10/14/2016 10:19	0.0104	Correlation Location 1
10/14/2016 10:20	0.0106	Correlation Location 1
10/14/2016 10:20	0.0109	Correlation Location 1
10/14/2016 10:20	0.0106	Correlation Location 1
10/14/2016 10:20	0.0105	Correlation Location 1
10/14/2016 10:20	0.0104	Correlation Location 1
10/14/2016 10:20	0.0104	Correlation Location 1
10/14/2016 10:20	0.0105	Correlation Location 1
10/14/2016 10:20	0.0104	Correlation Location 1
10/14/2016 10:20	0.0106	Correlation Location 1
10/14/2016 10:20	0.0109	Correlation Location 1
10/14/2016 10:21	0.0109	Correlation Location 1
10/14/2016 10:21	0.011	Correlation Location 1
10/14/2016 10:21	0.011	Correlation Location 1
10/14/2016 10:21	0.0108	Correlation Location 1
10/14/2016 10:21	0.0105	Correlation Location 1
10/14/2016 10:21	0.0105	Correlation Location 1
10/14/2016 10:21	0.011	Correlation Location 1
10/14/2016 10:21	0.0108	Correlation Location 1
10/14/2016 10:21	0.0105	Correlation Location 1
10/14/2016 10:21	0.0105	Correlation Location 1
10/14/2016 10:22	0.0105	Correlation Location 1
10/14/2016 10:22	0.0104	Correlation Location 1
10/14/2016 10:22	0.0103	Correlation Location 1
10/14/2016 10:22	0.01	Correlation Location 1
10/14/2016 10:22	0.0103	Correlation Location 1
10/14/2016 10:22	0.0106	Correlation Location 1
10/14/2016 10:22	0.0109	Correlation Location 1
10/14/2016 10:22	0.0112	Correlation Location 1
10/14/2016 10:22	0.0117	Correlation Location 1

Barton 3 Exposure Rate Measurements for Correlation

Date and Time	Exposure Rate (mR/h)	Location
10/14/2016 10:45	0.0547	Correlation Location 2
10/14/2016 10:45	0.0969	Correlation Location 2
10/14/2016 10:45	0.0867	Correlation Location 2
10/14/2016 10:45	0.0618	Correlation Location 2
10/14/2016 10:45	0.0434	Correlation Location 2
10/14/2016 10:45	0.032	Correlation Location 2
10/14/2016 10:45	0.0254	Correlation Location 2
10/14/2016 10:45	0.0218	Correlation Location 2
10/14/2016 10:45	0.0199	Correlation Location 2
10/14/2016 10:45	0.019	Correlation Location 2
10/14/2016 10:46	0.0186	Correlation Location 2
10/14/2016 10:46	0.0182	Correlation Location 2
10/14/2016 10:46	0.0187	Correlation Location 2
10/14/2016 10:46	0.0192	Correlation Location 2
10/14/2016 10:46	0.0192	Correlation Location 2
10/14/2016 10:46	0.019	Correlation Location 2
10/14/2016 10:46	0.0188	Correlation Location 2
10/14/2016 10:46	0.0187	Correlation Location 2
10/14/2016 10:46	0.0187	Correlation Location 2
10/14/2016 10:46	0.0186	Correlation Location 2
10/14/2016 10:47	0.0189	Correlation Location 2
10/14/2016 10:47	0.0192	Correlation Location 2
10/14/2016 10:47	0.0194	Correlation Location 2
10/14/2016 10:47	0.0194	Correlation Location 2
10/14/2016 10:47	0.0189	Correlation Location 2
10/14/2016 10:47	0.0187	Correlation Location 2
10/14/2016 10:47	0.019	Correlation Location 2
10/14/2016 10:47	0.0187	Correlation Location 2
10/14/2016 10:47	0.0187	Correlation Location 2
10/14/2016 10:47	0.0192	Correlation Location 2
10/14/2016 10:48	0.019	Correlation Location 2
10/14/2016 10:48	0.0188	Correlation Location 2
10/14/2016 10:48	0.0188	Correlation Location 2
10/14/2016 10:48	0.019	Correlation Location 2
10/14/2016 10:48	0.0192	Correlation Location 2
10/14/2016 10:48	0.0188	Correlation Location 2
10/14/2016 10:48	0.0184	Correlation Location 2
10/14/2016 10:48	0.018	Correlation Location 2
10/14/2016 10:48	0.0185	Correlation Location 2
10/14/2016 10:48	0.0192	Correlation Location 2
10/14/2016 10:49	0.0194	Correlation Location 2
10/14/2016 10:49	0.0199	Correlation Location 2
10/14/2016 10:49	0.0199	Correlation Location 2
10/14/2016 10:49	0.0194	Correlation Location 2
10/14/2016 10:49	0.019	Correlation Location 2
10/14/2016 10:49	0.019	Correlation Location 2
10/14/2016 10:49	0.0188	Correlation Location 2
10/14/2016 10:49	0.0184	Correlation Location 2
10/14/2016 10:49	0.0182	Correlation Location 2
10/14/2016 10:49	0.0186	Correlation Location 2
10/14/2016 10:50	0.0184	Correlation Location 2
10/14/2016 10:50	0.0188	Correlation Location 2
10/14/2016 10:50	0.0189	Correlation Location 2
10/14/2016 10:50	0.0188	Correlation Location 2
10/14/2016 10:50	0.0186	Correlation Location 2
10/14/2016 10:50	0.0186	Correlation Location 2
10/14/2016 10:50	0.0185	Correlation Location 2
10/14/2016 10:50	0.0185	Correlation Location 2
10/14/2016 10:50	0.0182	Correlation Location 2
10/14/2016 10:50	0.0185	Correlation Location 2
10/14/2016 10:51	0.0187	Correlation Location 2
10/14/2016 10:51	0.0187	Correlation Location 2
10/14/2016 10:51	0.0186	Correlation Location 2
10/14/2016 10:51	0.0187	Correlation Location 2
10/14/2016 10:51	0.0187	Correlation Location 2
10/14/2016 10:51	0.0186	Correlation Location 2
10/14/2016 10:51	0.0187	Correlation Location 2
10/14/2016 10:51	0.019	Correlation Location 2
10/14/2016 10:51	0.019	Correlation Location 2
10/14/2016 10:51	0.0186	Correlation Location 2
10/14/2016 10:52	0.0184	Correlation Location 2
10/14/2016 10:52	0.0184	Correlation Location 2
10/14/2016 10:52	0.0187	Correlation Location 2
10/14/2016 10:52	0.0189	Correlation Location 2
10/14/2016 10:52	0.019	Correlation Location 2
10/14/2016 10:52	0.019	Correlation Location 2
10/14/2016 10:52	0.019	Correlation Location 2
10/14/2016 10:52	0.0192	Correlation Location 2
10/14/2016 10:52	0.0192	Correlation Location 2
10/14/2016 10:52	0.0192	Correlation Location 2
10/14/2016 10:53	0.019	Correlation Location 2
10/14/2016 10:53	0.0189	Correlation Location 2
10/14/2016 10:53	0.0188	Correlation Location 2
10/14/2016 10:53	0.0189	Correlation Location 2
10/14/2016 10:53	0.019	Correlation Location 2
10/14/2016 10:53	0.0192	Correlation Location 2
10/14/2016 10:53	0.019	Correlation Location 2
10/14/2016 10:53	0.0192	Correlation Location 2
10/14/2016 10:53	0.0188	Correlation Location 2
10/14/2016 10:53	0.0182	Correlation Location 2
10/14/2016 10:54	0.0182	Correlation Location 2
10/14/2016 10:54	0.0182	Correlation Location 2
10/14/2016 10:54	0.0184	Correlation Location 2
10/14/2016 10:54	0.0185	Correlation Location 2
10/14/2016 10:54	0.0188	Correlation Location 2
10/14/2016 10:54	0.0189	Correlation Location 2
10/14/2016 10:54	0.0188	Correlation Location 2
10/14/2016 10:54	0.0189	Correlation Location 2
10/14/2016 10:54	0.019	Correlation Location 2
10/14/2016 10:54	0.0192	Correlation Location 2
10/14/2016 10:55	0.0189	Correlation Location 2
10/14/2016 10:55	0.0185	Correlation Location 2
10/14/2016 10:55	0.0184	Correlation Location 2
10/14/2016 10:55	0.019	Correlation Location 2
10/14/2016 10:55	0.019	Correlation Location 2
10/14/2016 10:55	0.0192	Correlation Location 2
10/14/2016 10:55	0.0194	Correlation Location 2
10/14/2016 10:55	0.019	Correlation Location 2
10/14/2016 11:19	0.0556	Correlation Location 3
10/14/2016 11:19	0.0988	Correlation Location 3
10/14/2016 11:19	0.0895	Correlation Location 3
10/14/2016 11:19	0.0655	Correlation Location 3
10/14/2016 11:20	0.0474	Correlation Location 3
10/14/2016 11:20	0.036	Correlation Location 3

Barton 3 Exposure Rate Measurements for Correlation

Date and Time	Exposure Rate (mR/h)	Location
10/14/2016 11:20	0.0299	Correlation Location 3
10/14/2016 11:20	0.0272	Correlation Location 3
10/14/2016 11:20	0.0259	Correlation Location 3
10/14/2016 11:20	0.0247	Correlation Location 3
10/14/2016 11:20	0.0239	Correlation Location 3
10/14/2016 11:20	0.0235	Correlation Location 3
10/14/2016 11:20	0.0233	Correlation Location 3
10/14/2016 11:20	0.0231	Correlation Location 3
10/14/2016 11:21	0.0232	Correlation Location 3
10/14/2016 11:21	0.0233	Correlation Location 3
10/14/2016 11:21	0.0233	Correlation Location 3
10/14/2016 11:21	0.0231	Correlation Location 3
10/14/2016 11:21	0.0232	Correlation Location 3
10/14/2016 11:21	0.0232	Correlation Location 3
10/14/2016 11:21	0.0228	Correlation Location 3
10/14/2016 11:21	0.0223	Correlation Location 3
10/14/2016 11:21	0.0227	Correlation Location 3
10/14/2016 11:21	0.0231	Correlation Location 3
10/14/2016 11:22	0.0232	Correlation Location 3
10/14/2016 11:22	0.0232	Correlation Location 3
10/14/2016 11:22	0.0231	Correlation Location 3
10/14/2016 11:22	0.0231	Correlation Location 3
10/14/2016 11:22	0.0237	Correlation Location 3
10/14/2016 11:22	0.0241	Correlation Location 3
10/14/2016 11:22	0.0241	Correlation Location 3
10/14/2016 11:22	0.0235	Correlation Location 3
10/14/2016 11:22	0.0237	Correlation Location 3
10/14/2016 11:22	0.024	Correlation Location 3
10/14/2016 11:23	0.0242	Correlation Location 3
10/14/2016 11:23	0.0243	Correlation Location 3
10/14/2016 11:23	0.0239	Correlation Location 3
10/14/2016 11:23	0.0237	Correlation Location 3
10/14/2016 11:23	0.0234	Correlation Location 3
10/14/2016 11:23	0.0241	Correlation Location 3
10/14/2016 11:23	0.0244	Correlation Location 3
10/14/2016 11:23	0.0243	Correlation Location 3
10/14/2016 11:23	0.024	Correlation Location 3
10/14/2016 11:23	0.0237	Correlation Location 3
10/14/2016 11:24	0.0235	Correlation Location 3
10/14/2016 11:24	0.0232	Correlation Location 3
10/14/2016 11:24	0.0233	Correlation Location 3
10/14/2016 11:24	0.0237	Correlation Location 3
10/14/2016 11:24	0.0242	Correlation Location 3
10/14/2016 11:24	0.0239	Correlation Location 3
10/14/2016 11:24	0.0237	Correlation Location 3
10/14/2016 11:24	0.024	Correlation Location 3
10/14/2016 11:24	0.0239	Correlation Location 3
10/14/2016 11:24	0.0242	Correlation Location 3
10/14/2016 11:25	0.0241	Correlation Location 3
10/14/2016 11:25	0.0239	Correlation Location 3
10/14/2016 11:25	0.024	Correlation Location 3
10/14/2016 11:25	0.0241	Correlation Location 3
10/14/2016 11:25	0.0242	Correlation Location 3
10/14/2016 11:25	0.0247	Correlation Location 3
10/14/2016 11:25	0.0247	Correlation Location 3
10/14/2016 11:25	0.0243	Correlation Location 3
10/14/2016 11:25	0.0241	Correlation Location 3

Date and Time	Exposure Rate (mR/h)	Location
10/14/2016 11:25	0.0239	Correlation Location 3
10/14/2016 11:26	0.0237	Correlation Location 3
10/14/2016 11:26	0.0237	Correlation Location 3
10/14/2016 11:26	0.0235	Correlation Location 3
10/14/2016 11:26	0.0235	Correlation Location 3
10/14/2016 11:26	0.0234	Correlation Location 3
10/14/2016 11:26	0.0233	Correlation Location 3
10/14/2016 11:26	0.0234	Correlation Location 3
10/14/2016 11:26	0.0232	Correlation Location 3
10/14/2016 11:26	0.023	Correlation Location 3
10/14/2016 11:26	0.023	Correlation Location 3
10/14/2016 11:27	0.0227	Correlation Location 3
10/14/2016 11:27	0.0229	Correlation Location 3
10/14/2016 11:27	0.0228	Correlation Location 3
10/14/2016 11:27	0.0227	Correlation Location 3
10/14/2016 11:27	0.0225	Correlation Location 3
10/14/2016 11:27	0.0223	Correlation Location 3
10/14/2016 11:27	0.0222	Correlation Location 3
10/14/2016 11:27	0.0221	Correlation Location 3
10/14/2016 11:27	0.0225	Correlation Location 3
10/14/2016 11:27	0.0231	Correlation Location 3
10/14/2016 11:28	0.0235	Correlation Location 3
10/14/2016 11:28	0.0235	Correlation Location 3
10/14/2016 11:28	0.0235	Correlation Location 3
10/14/2016 11:28	0.0239	Correlation Location 3
10/14/2016 11:28	0.0237	Correlation Location 3
10/14/2016 11:28	0.023	Correlation Location 3
10/14/2016 11:28	0.023	Correlation Location 3
10/14/2016 11:28	0.0235	Correlation Location 3
10/14/2016 11:28	0.0234	Correlation Location 3
10/14/2016 11:28	0.0233	Correlation Location 3
10/14/2016 11:29	0.0237	Correlation Location 3
10/14/2016 11:29	0.0235	Correlation Location 3
10/14/2016 11:29	0.023	Correlation Location 3
10/14/2016 11:29	0.0227	Correlation Location 3
10/14/2016 11:29	0.0228	Correlation Location 3
10/14/2016 11:29	0.0227	Correlation Location 3
10/14/2016 11:29	0.0229	Correlation Location 3
10/14/2016 11:29	0.0232	Correlation Location 3
10/14/2016 11:29	0.0233	Correlation Location 3
10/14/2016 11:29	0.0233	Correlation Location 3
10/14/2016 11:30	0.0235	Correlation Location 3
10/14/2016 11:30	0.0237	Correlation Location 3
10/14/2016 11:30	0.0234	Correlation Location 3
10/14/2016 11:30	0.0233	Correlation Location 3
10/14/2016 11:30	0.0233	Correlation Location 3
10/14/2016 11:30	0.0227	Correlation Location 3
10/14/2016 11:30	0.0227	Correlation Location 3
10/14/2016 11:30	0.0228	Correlation Location 3
10/14/2016 11:30	0.0229	Correlation Location 3
10/14/2016 11:30	0.0228	Correlation Location 3
10/14/2016 11:49	0.0542	Correlation Location 4
10/14/2016 11:49	0.095	Correlation Location 4
10/14/2016 11:49	0.084	Correlation Location 4
10/14/2016 11:49	0.0586	Correlation Location 4
10/14/2016 11:49	0.0398	Correlation Location 4
10/14/2016 11:50	0.0286	Correlation Location 4

Barton 3 Exposure Rate Measurements for Correlation

Date and Time	Exposure Rate (mR/h)	Location
10/14/2016 11:50	0.0223	Correlation Location 4
10/14/2016 11:50	0.0189	Correlation Location 4
10/14/2016 11:50	0.0172	Correlation Location 4
10/14/2016 11:50	0.0163	Correlation Location 4
10/14/2016 11:50	0.016	Correlation Location 4
10/14/2016 11:50	0.0156	Correlation Location 4
10/14/2016 11:50	0.0156	Correlation Location 4
10/14/2016 11:50	0.0155	Correlation Location 4
10/14/2016 11:50	0.0156	Correlation Location 4
10/14/2016 11:51	0.0158	Correlation Location 4
10/14/2016 11:51	0.0158	Correlation Location 4
10/14/2016 11:51	0.0164	Correlation Location 4
10/14/2016 11:51	0.017	Correlation Location 4
10/14/2016 11:51	0.0172	Correlation Location 4
10/14/2016 11:51	0.0169	Correlation Location 4
10/14/2016 11:51	0.0162	Correlation Location 4
10/14/2016 11:51	0.0158	Correlation Location 4
10/14/2016 11:51	0.0155	Correlation Location 4
10/14/2016 11:51	0.0156	Correlation Location 4
10/14/2016 11:52	0.0158	Correlation Location 4
10/14/2016 11:52	0.0154	Correlation Location 4
10/14/2016 11:52	0.0154	Correlation Location 4
10/14/2016 11:52	0.0155	Correlation Location 4
10/14/2016 11:52	0.0155	Correlation Location 4
10/14/2016 11:52	0.0156	Correlation Location 4
10/14/2016 11:52	0.016	Correlation Location 4
10/14/2016 11:52	0.0158	Correlation Location 4
10/14/2016 11:52	0.0154	Correlation Location 4
10/14/2016 11:52	0.015	Correlation Location 4
10/14/2016 11:53	0.0147	Correlation Location 4
10/14/2016 11:53	0.0147	Correlation Location 4
10/14/2016 11:53	0.0152	Correlation Location 4
10/14/2016 11:53	0.0155	Correlation Location 4
10/14/2016 11:53	0.0154	Correlation Location 4
10/14/2016 11:53	0.0154	Correlation Location 4
10/14/2016 11:53	0.0154	Correlation Location 4
10/14/2016 11:53	0.0153	Correlation Location 4
10/14/2016 11:53	0.0152	Correlation Location 4
10/14/2016 11:53	0.0154	Correlation Location 4
10/14/2016 11:54	0.0156	Correlation Location 4
10/14/2016 11:54	0.016	Correlation Location 4
10/14/2016 11:54	0.0163	Correlation Location 4
10/14/2016 11:54	0.016	Correlation Location 4
10/14/2016 11:54	0.0156	Correlation Location 4
10/14/2016 11:54	0.0154	Correlation Location 4
10/14/2016 11:54	0.0154	Correlation Location 4
10/14/2016 11:54	0.0156	Correlation Location 4
10/14/2016 11:54	0.0158	Correlation Location 4
10/14/2016 11:54	0.016	Correlation Location 4
10/14/2016 11:55	0.016	Correlation Location 4
10/14/2016 11:55	0.016	Correlation Location 4
10/14/2016 11:55	0.0158	Correlation Location 4
10/14/2016 11:55	0.0158	Correlation Location 4
10/14/2016 11:55	0.0158	Correlation Location 4
10/14/2016 11:55	0.016	Correlation Location 4
10/14/2016 11:55	0.0156	Correlation Location 4
10/14/2016 11:55	0.0156	Correlation Location 4

Date and Time	Exposure Rate (mR/h)	Location
10/14/2016 11:55	0.0154	Correlation Location 4
10/14/2016 11:55	0.0153	Correlation Location 4
10/14/2016 11:56	0.0152	Correlation Location 4
10/14/2016 11:56	0.0151	Correlation Location 4
10/14/2016 11:56	0.0152	Correlation Location 4
10/14/2016 11:56	0.0158	Correlation Location 4
10/14/2016 11:56	0.0162	Correlation Location 4
10/14/2016 11:56	0.016	Correlation Location 4
10/14/2016 11:56	0.016	Correlation Location 4
10/14/2016 11:56	0.016	Correlation Location 4
10/14/2016 11:56	0.0156	Correlation Location 4
10/14/2016 11:56	0.0154	Correlation Location 4
10/14/2016 11:57	0.0152	Correlation Location 4
10/14/2016 11:57	0.0151	Correlation Location 4
10/14/2016 11:57	0.0152	Correlation Location 4
10/14/2016 11:57	0.0156	Correlation Location 4
10/14/2016 11:57	0.0161	Correlation Location 4
10/14/2016 11:57	0.0166	Correlation Location 4
10/14/2016 11:57	0.0167	Correlation Location 4
10/14/2016 11:57	0.0168	Correlation Location 4
10/14/2016 11:57	0.0165	Correlation Location 4
10/14/2016 11:57	0.0161	Correlation Location 4
10/14/2016 11:58	0.016	Correlation Location 4
10/14/2016 11:58	0.0161	Correlation Location 4
10/14/2016 11:58	0.0161	Correlation Location 4
10/14/2016 11:58	0.0158	Correlation Location 4
10/14/2016 11:58	0.0161	Correlation Location 4
10/14/2016 11:58	0.016	Correlation Location 4
10/14/2016 11:58	0.0156	Correlation Location 4
10/14/2016 11:58	0.0155	Correlation Location 4
10/14/2016 11:58	0.0151	Correlation Location 4
10/14/2016 11:58	0.0149	Correlation Location 4
10/14/2016 11:59	0.0148	Correlation Location 4
10/14/2016 11:59	0.0151	Correlation Location 4
10/14/2016 11:59	0.0152	Correlation Location 4
10/14/2016 11:59	0.0151	Correlation Location 4
10/14/2016 11:59	0.0149	Correlation Location 4
10/14/2016 11:59	0.015	Correlation Location 4
10/14/2016 11:59	0.0148	Correlation Location 4
10/14/2016 11:59	0.0152	Correlation Location 4
10/14/2016 11:59	0.015	Correlation Location 4
10/14/2016 11:59	0.015	Correlation Location 4
10/14/2016 12:00	0.0152	Correlation Location 4
10/14/2016 12:00	0.0154	Correlation Location 4
10/14/2016 12:00	0.0156	Correlation Location 4
10/14/2016 12:00	0.0152	Correlation Location 4
10/14/2016 12:00	0.015	Correlation Location 4
10/14/2016 12:13	0.0534	Correlation Location 5
10/14/2016 12:13	0.0934	Correlation Location 5
10/14/2016 12:13	0.082	Correlation Location 5
10/14/2016 12:13	0.0565	Correlation Location 5
10/14/2016 12:13	0.0373	Correlation Location 5
10/14/2016 12:13	0.0263	Correlation Location 5
10/14/2016 12:13	0.0202	Correlation Location 5
10/14/2016 12:13	0.017	Correlation Location 5
10/14/2016 12:13	0.0151	Correlation Location 5
10/14/2016 12:13	0.014	Correlation Location 5

Barton 3 Exposure Rate Measurements for Correlation

Date and Time	Exposure Rate (mR/h)	Location
10/14/2016 12:14	0.0133	Correlation Location 5
10/14/2016 12:14	0.0131	Correlation Location 5
10/14/2016 12:14	0.0128	Correlation Location 5
10/14/2016 12:14	0.0127	Correlation Location 5
10/14/2016 12:14	0.0124	Correlation Location 5
10/14/2016 12:14	0.0126	Correlation Location 5
10/14/2016 12:14	0.0129	Correlation Location 5
10/14/2016 12:14	0.0131	Correlation Location 5
10/14/2016 12:14	0.013	Correlation Location 5
10/14/2016 12:14	0.013	Correlation Location 5
10/14/2016 12:15	0.0129	Correlation Location 5
10/14/2016 12:15	0.0129	Correlation Location 5
10/14/2016 12:15	0.0133	Correlation Location 5
10/14/2016 12:15	0.0136	Correlation Location 5
10/14/2016 12:15	0.0134	Correlation Location 5
10/14/2016 12:15	0.0132	Correlation Location 5
10/14/2016 12:15	0.0134	Correlation Location 5
10/14/2016 12:15	0.0133	Correlation Location 5
10/14/2016 12:15	0.0132	Correlation Location 5
10/14/2016 12:15	0.0132	Correlation Location 5
10/14/2016 12:16	0.0131	Correlation Location 5
10/14/2016 12:16	0.0128	Correlation Location 5
10/14/2016 12:16	0.0124	Correlation Location 5
10/14/2016 12:16	0.0121	Correlation Location 5
10/14/2016 12:16	0.0118	Correlation Location 5
10/14/2016 12:16	0.0118	Correlation Location 5
10/14/2016 12:16	0.012	Correlation Location 5
10/14/2016 12:16	0.0122	Correlation Location 5
10/14/2016 12:16	0.0128	Correlation Location 5
10/14/2016 12:16	0.013	Correlation Location 5
10/14/2016 12:17	0.013	Correlation Location 5
10/14/2016 12:17	0.0132	Correlation Location 5
10/14/2016 12:17	0.0134	Correlation Location 5
10/14/2016 12:17	0.0136	Correlation Location 5
10/14/2016 12:17	0.014	Correlation Location 5
10/14/2016 12:17	0.0141	Correlation Location 5
10/14/2016 12:17	0.0138	Correlation Location 5
10/14/2016 12:17	0.0138	Correlation Location 5
10/14/2016 12:17	0.0134	Correlation Location 5
10/14/2016 12:17	0.0131	Correlation Location 5
10/14/2016 12:18	0.0128	Correlation Location 5
10/14/2016 12:18	0.0123	Correlation Location 5
10/14/2016 12:18	0.0123	Correlation Location 5
10/14/2016 12:18	0.0123	Correlation Location 5
10/14/2016 12:18	0.0122	Correlation Location 5
10/14/2016 12:18	0.0118	Correlation Location 5
10/14/2016 12:18	0.0118	Correlation Location 5
10/14/2016 12:18	0.0122	Correlation Location 5
10/14/2016 12:18	0.0123	Correlation Location 5
10/14/2016 12:18	0.0124	Correlation Location 5
10/14/2016 12:19	0.0123	Correlation Location 5
10/14/2016 12:19	0.0126	Correlation Location 5
10/14/2016 12:19	0.0134	Correlation Location 5
10/14/2016 12:19	0.0137	Correlation Location 5
10/14/2016 12:19	0.0135	Correlation Location 5
10/14/2016 12:19	0.0131	Correlation Location 5
10/14/2016 12:19	0.0127	Correlation Location 5
10/14/2016 12:19	0.0124	Correlation Location 5
10/14/2016 12:19	0.0124	Correlation Location 5
10/14/2016 12:19	0.0128	Correlation Location 5
10/14/2016 12:20	0.0132	Correlation Location 5
10/14/2016 12:20	0.0135	Correlation Location 5
10/14/2016 12:20	0.0134	Correlation Location 5
10/14/2016 12:20	0.013	Correlation Location 5
10/14/2016 12:20	0.013	Correlation Location 5
10/14/2016 12:20	0.0137	Correlation Location 5
10/14/2016 12:20	0.0139	Correlation Location 5
10/14/2016 12:20	0.0134	Correlation Location 5
10/14/2016 12:20	0.0134	Correlation Location 5
10/14/2016 12:20	0.0132	Correlation Location 5
10/14/2016 12:21	0.013	Correlation Location 5
10/14/2016 12:21	0.013	Correlation Location 5
10/14/2016 12:21	0.0129	Correlation Location 5
10/14/2016 12:21	0.0124	Correlation Location 5
10/14/2016 12:21	0.0127	Correlation Location 5
10/14/2016 12:21	0.0131	Correlation Location 5
10/14/2016 12:21	0.0133	Correlation Location 5
10/14/2016 12:21	0.0132	Correlation Location 5
10/14/2016 12:21	0.0129	Correlation Location 5
10/14/2016 12:21	0.0126	Correlation Location 5
10/14/2016 12:22	0.0122	Correlation Location 5
10/14/2016 12:22	0.012	Correlation Location 5
10/14/2016 12:22	0.012	Correlation Location 5
10/14/2016 12:22	0.0122	Correlation Location 5
10/14/2016 12:22	0.0126	Correlation Location 5
10/14/2016 12:22	0.0128	Correlation Location 5
10/14/2016 12:22	0.0132	Correlation Location 5
10/14/2016 12:22	0.0134	Correlation Location 5
10/14/2016 12:22	0.0135	Correlation Location 5
10/14/2016 12:22	0.0131	Correlation Location 5
10/14/2016 12:23	0.0128	Correlation Location 5
10/14/2016 12:23	0.0128	Correlation Location 5
10/14/2016 12:23	0.0124	Correlation Location 5
10/14/2016 12:23	0.0124	Correlation Location 5
10/14/2016 12:23	0.0126	Correlation Location 5
10/14/2016 12:23	0.0128	Correlation Location 5
10/14/2016 12:23	0.0128	Correlation Location 5
10/14/2016 12:23	0.0129	Correlation Location 5
10/14/2016 12:23	0.0127	Correlation Location 5
10/14/2016 12:23	0.0123	Correlation Location 5
10/14/2016 12:24	0.0123	Correlation Location 5
10/14/2016 12:24	0.0124	Correlation Location 5
10/14/2016 12:24	0.0126	Correlation Location 5

Barton 3 Exposure Rate Measurements for Correlation

Appendix B Photographs

B.1 Site Photographs

B.2 Regional Site Photographs

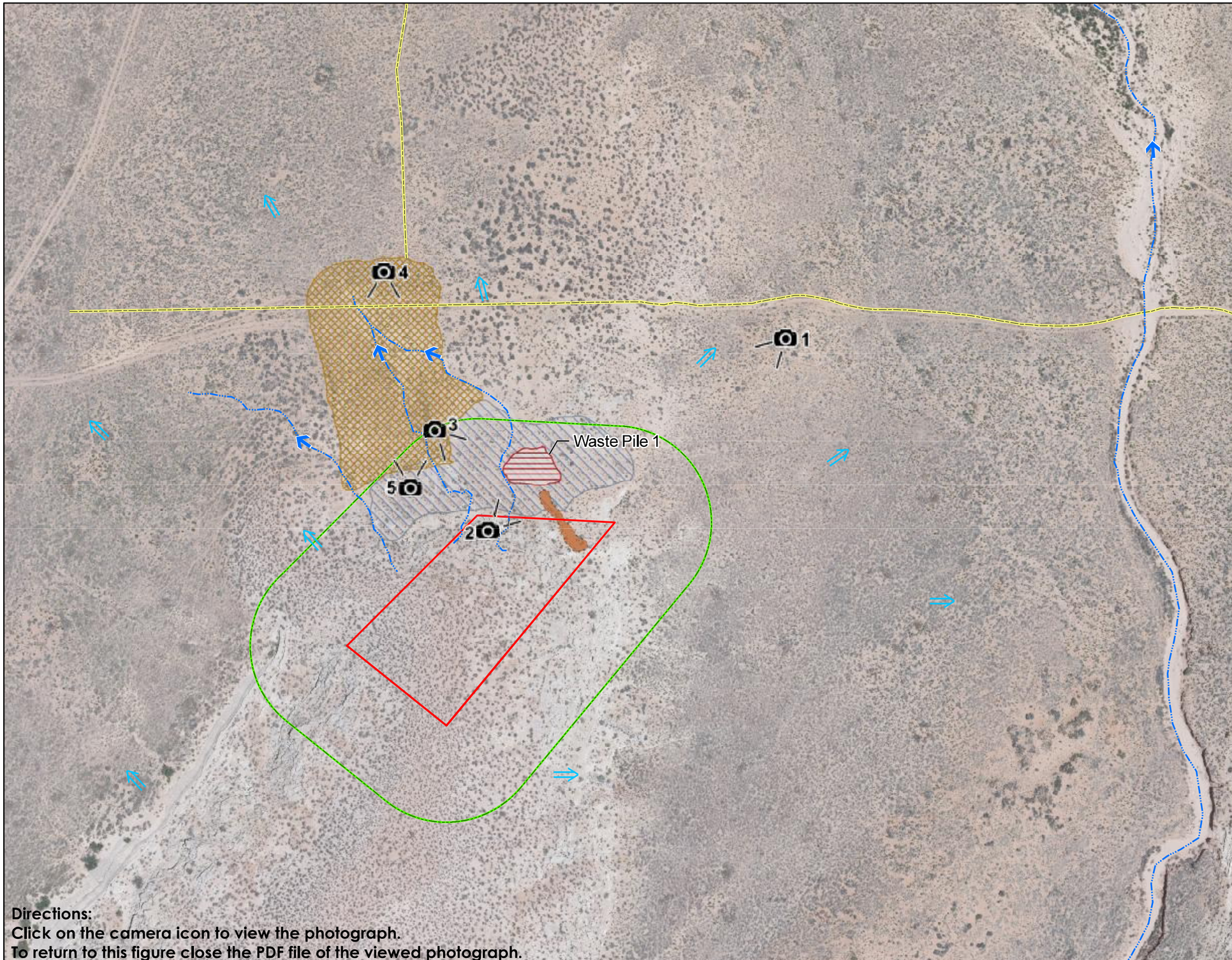

Directions:
Click on the camera icon to view the photograph.
To return to this figure close the PDF file of the viewed photograph.

NAVAJO NATION
AUM Environmental Response Trust-First Phase

LEGEND

- Photograph Indicating Direction Taken
- Flow Direction
- Approximate Overland Water Flow Direction
- Drainage
- Potential Haul Road
- Berm
- Excavation
- Graded / Disturbed Reclaimed Area
- Waste Pile
- Claim Boundary
- 100-Foot Claim Buffer

REFERENCES:
Coordinate System: NAD 1983 UTM Zone 12N

Basemap image flown by Cooper Aerial Surveys Co. on June 16, 2017.

N
W E
S

0 100 200
Feet

TITLE:
Site Photographs

PROJECT:
Removal Site Evaluation
Barton 3 Mine Site

DATE: 7/24/2018

DOCUMENT NAME: Removal Site Evaluation Report

Stantec

AUTHOR: CBB
REVIEWER: EDZ

FIGURE: B-1

Document Path: U:\233001213\03_data\gis_cad_MXDs\RSE\RSE_Barton3\RSE_Barton3_Appendix_B1_11x17_L_20180725.mxd

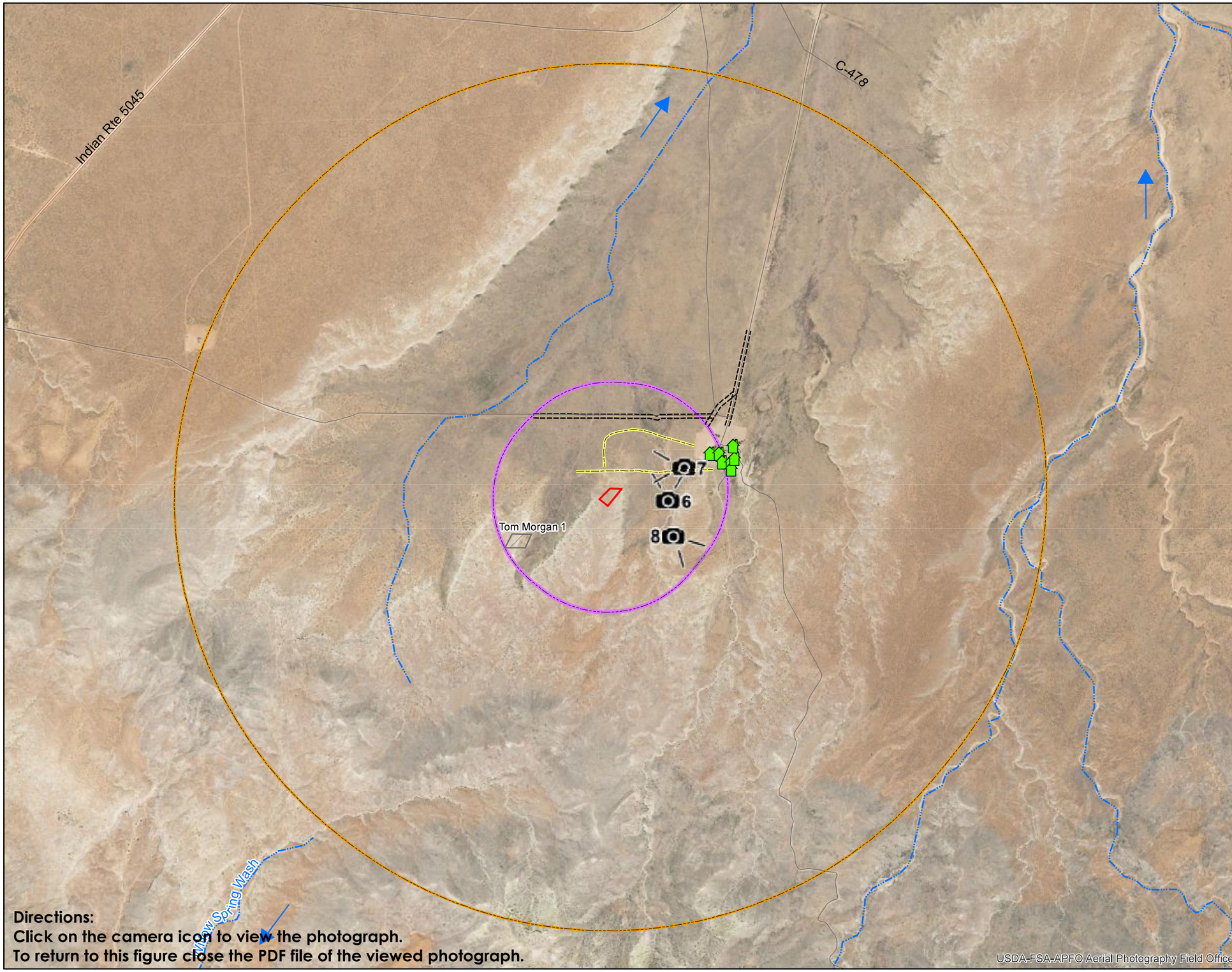

NAVAJO NATION
AUM Environmental Response Trust-First Phase

LEGEND

- Photograph Indicating Direction Taken
- Habitable Building
- Flow Direction
- Tribal Road
- Local Road
- Potential Haul Road
- Road
- Intermittent Stream/River
- Claim Boundary
- 1/4-Mile Claim Boundary Buffer
- 1-Mile Claim Boundary Buffer
- Other Claim Boundary

REFERENCES:
Coordinate System: NAD 1983 UTM Zone 12N

Basemap image accessed from the National Agriculture Imagery Program (NAIP) web mapping service (https://gis.apfo.usda.gov/arcgis/services/) on 07/2018.

N
W E
S

0 1,200 2,400
Feet

TITLE:
Regional Site Photographs

PROJECT:
Removal Site Evaluation
Barton 3 Mine Site

DATE: 7/30/2018

DOCUMENT NAME: Removal Site Evaluation Report

Stantec

AUTHOR: CBB
REVIEWER: EDZ

FIGURE: B-2

Document Path: U:\233001213\03_data\gis_cad_MXDs\RSE\RSE_Barton3\RSE_Barton3_AppendixB2_11x17_L_20180725.mxd

Appendix C Field Activity Forms

C.1 Soil Sample Field Forms

C.2 Drilling and Hand Auger Borehole Logs

C.1 Soil Sample Field Forms

SURFACE SOIL SAMPLE LOG FORM

AREA #/NAME Barton 3

SAMPLE I.D. S220-BG1-001

SAMPLE COLLECTION DATE 10/6/16

SAMPLE COLLECTION TIME 0936

SAMPLE COLLECTED BY C. Lee

WEATHER CONDITIONS 55°, cloudy, slight wind

FIELD USCS DESCRIPTIONS Silty sand

MAJOR DIVISIONS: ☐ OH ☐ CH ☐ MH ☐ OH ☐ CL ☐ ML ☐ SC
☒ SM ☐ SP ☐ SW ☐ GC ☐ GM ☐ GP ☐ GW

QUALIFIERS: ☐ TRACE ☐ MINOR ☐ SOME; SAND SIZE ☐ FINE ☐ MEDIUM ☐ COARSE

MOISTURE: ☒ DRY ☐ MOIST ☐ WET

SAMPLE CONTAINERS (NUMBER AND TYPE) 2, ziploc

ANALYSES: Ra-226, Metals

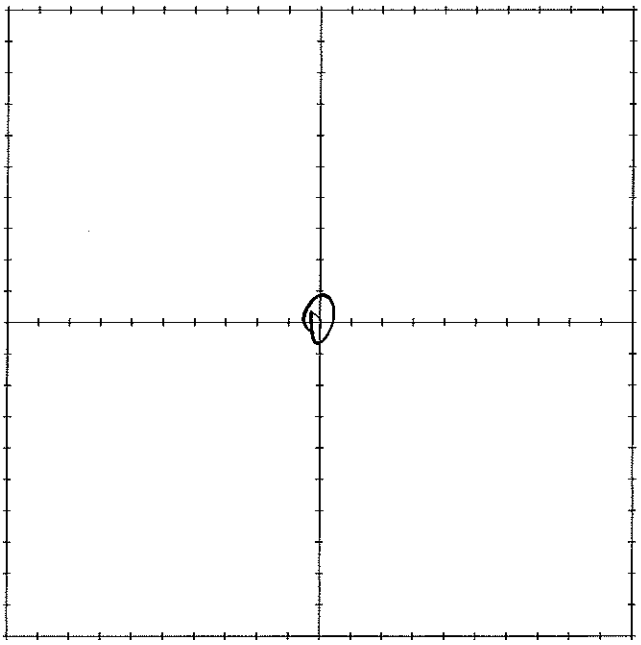

MARK INDIVIDUAL GRAB SAMPLE LOCATIONS IN GRID

MWH

SURFACE SOIL SAMPLE LOG FORM

AREA #/NAME Burton 3

SAMPLE I.D. S220-BG1-002

SAMPLE COLLECTION DATE 10/6/16

SAMPLE COLLECTION TIME 0941

SAMPLE COLLECTED BY C. Lee

WEATHER CONDITIONS 55°, cloudy, slight wind

FIELD USCS DESCRIPTIONS Silty sand

MAJOR DIVISIONS: ☐ OH ☐ CH ☐ MH ☐ OH ☐ CL ☐ ML ☐ SC
☒ SM ☐ SP ☐ SW ☐ GC ☐ GM ☐ GP ☐ GW

QUALIFIERS: ☐ TRACE ☐ MINOR ☐ SOME; SAND SIZE ☐ FINE ☐ MEDIUM ☐ COARSE

MOISTURE: ☒ DRY ☐ MOIST ☐ WET

SAMPLE CONTAINERS (NUMBER AND TYPE) 2, ziploc

ANALYSES: Ra-226, Metals

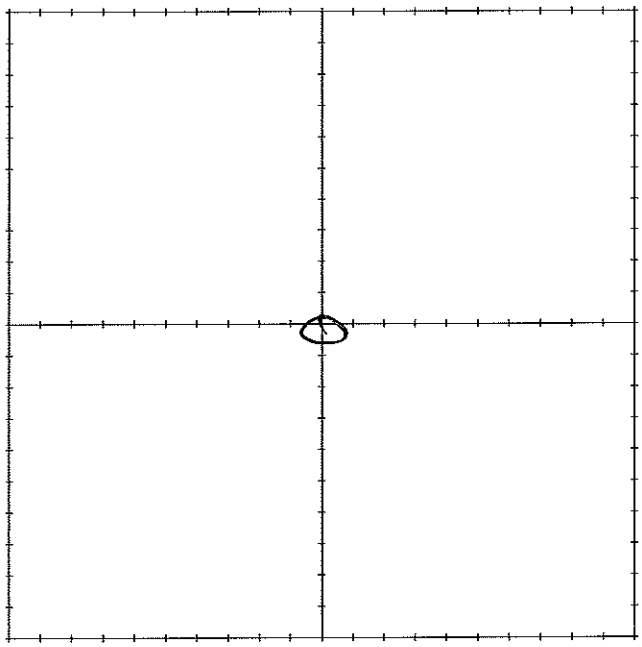

MARK INDIVIDUAL GRAB SAMPLE LOCATIONS IN GRID

MWH

SURFACE SOIL SAMPLE LOG FORM

AREA #/NAME Barton 3

SAMPLE I.D. S220-BG1-003

SAMPLE COLLECTION DATE 10/6/16

SAMPLE COLLECTION TIME 0945

SAMPLE COLLECTED BY C. Lee

WEATHER CONDITIONS 55°, cloudy, slight wind

FIELD USCS DESCRIPTIONS Silty sand

MAJOR DIVISIONS: ☐ OH ☐ CH ☐ MH ☐ OH ☐ CL ☐ ML ☐ SC
☒ SM ☐ SP ☐ SW ☐ GC ☐ GM ☐ GP ☐ GW

QUALIFIERS: ☐ TRACE ☐ MINOR ☐ SOME; SAND SIZE ☐ FINE ☐ MEDIUM ☐ COARSE

MOISTURE: ☒ DRY ☐ MOIST ☐ WET

SAMPLE CONTAINERS (NUMBER AND TYPE) 2 ziplock

ANALYSES: Ra-226, Metals

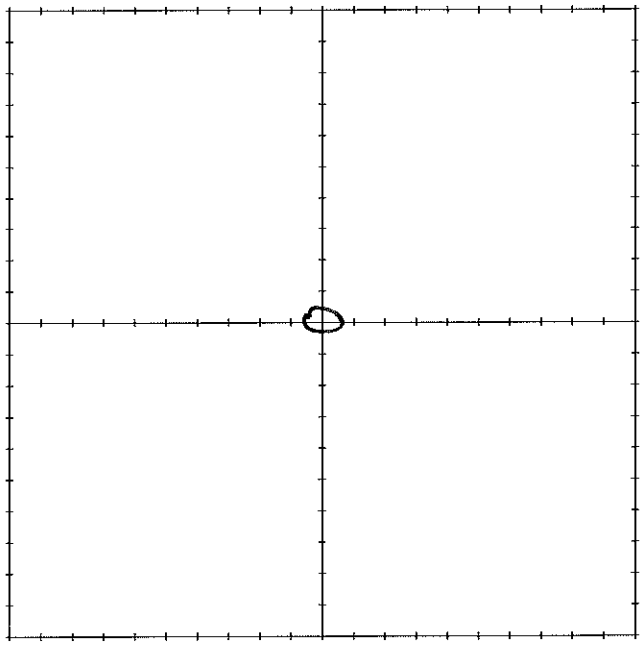

MARK INDIVIDUAL GRAB SAMPLE LOCATIONS IN GRID

MWH

SURFACE SOIL SAMPLE LOG FORM

AREA #/NAME Barton 3

SAMPLE I.D. S220-BG1-004

SAMPLE COLLECTION DATE 10/6/16

SAMPLE COLLECTION TIME 0952

SAMPLE COLLECTED BY C. Lee

WEATHER CONDITIONS 55°, cloudy, slight wind

FIELD USCS DESCRIPTIONS Silty Sand

MAJOR DIVISIONS: ☐ OH ☐ CH ☐ MH ☐ OH ☐ CL ☐ ML ☐ SC
☒ SM ☐ SP ☐ SW ☐ GC ☐ GM ☐ GP ☐ GW

QUALIFIERS: ☐ TRACE ☐ MINOR ☐ SOME; SAND SIZE ☐ FINE ☐ MEDIUM ☐ COARSE

MOISTURE: ☒ DRY ☐ MOIST ☐ WET

SAMPLE CONTAINERS (NUMBER AND TYPE) 2, ziploc

ANALYSES: Ra-226, Metals

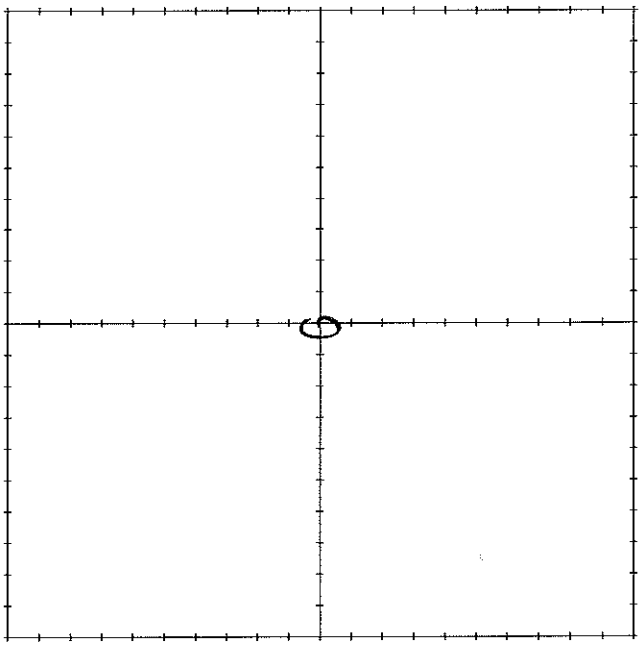

MARK INDIVIDUAL GRAB SAMPLE LOCATIONS IN GRID

MWH

SURFACE SOIL SAMPLE LOG FORM

AREA #/NAME Barton 3

SAMPLE I.D. S220-BG1-005

SAMPLE COLLECTION DATE 10/6/16

SAMPLE COLLECTION TIME 0958

SAMPLE COLLECTED BY C. Lee

WEATHER CONDITIONS 55°, cloudy, slight wind

FIELD USCS DESCRIPTIONS silty sand

MAJOR DIVISIONS: ☐ OH ☐ CH ☐ MH ☐ OH ☐ CL ☐ ML ☐ SC
☒ SM ☐ SP ☐ SW ☐ GC ☐ GM ☐ GP ☐ GW

QUALIFIERS: ☐ TRACE ☐ MINOR ☐ SOME; SAND SIZE ☐ FINE ☐ MEDIUM ☐ COARSE

MOISTURE: ☒ DRY ☐ MOIST ☐ WET

SAMPLE CONTAINERS (NUMBER AND TYPE) 2, ziploc

ANALYSES: Ra-226, Mercury

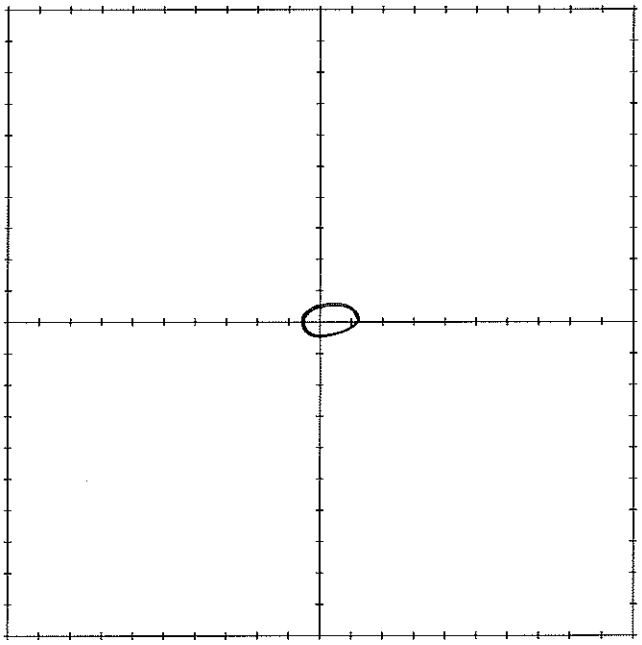

MARK INDIVIDUAL GRAB SAMPLE LOCATIONS IN GRID

MWH

SURFACE SOIL SAMPLE LOG FORM

AREA #/NAME Barn 3

SAMPLE I.D. S220-BG1-006

SAMPLE COLLECTION DATE 10/6/16

SAMPLE COLLECTION TIME 1002

SAMPLE COLLECTED BY Chee

WEATHER CONDITIONS 55°, cloudy, slight wind

FIELD USCS DESCRIPTIONS Silty sand

MAJOR DIVISIONS: ☐ OH ☐ CH ☐ MH ☐ OH ☐ CL ☐ ML ☐ SC
☒ SM ☐ SP ☐ SW ☐ GC ☐ GM ☐ GP ☐ GW

QUALIFIERS: ☐ TRACE ☐ MINOR ☐ SOME; SAND SIZE ☐ FINE ☐ MEDIUM ☐ COARSE

MOISTURE: ☒ DRY ☐ MOIST ☐ WET

SAMPLE CONTAINERS (NUMBER AND TYPE) 2, ziploc

ANALYSES: Ra-226, Metals

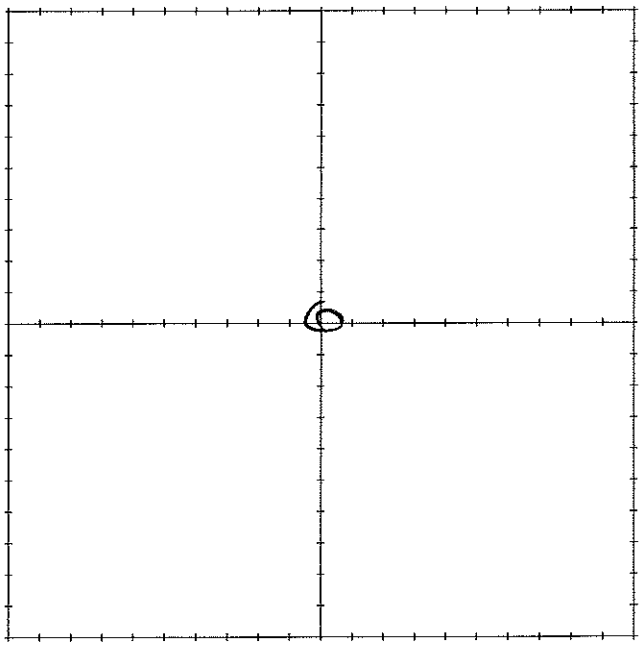

MARK INDIVIDUAL GRAB SAMPLE LOCATIONS IN GRID

MWH

SURFACE SOIL SAMPLE LOG FORM

AREA #/NAME Barton3

SAMPLE I.D. S220-BG1-007, MS, MSD

SAMPLE COLLECTION DATE 10/6/16

SAMPLE COLLECTION TIME 1010

SAMPLE COLLECTED BY C. Lee

WEATHER CONDITIONS 55°, cloudy, slight wind

FIELD USCS DESCRIPTIONS Silty sand

MAJOR DIVISIONS: ☐ OH ☐ CH ☐ MH ☐ OH ☐ CL ☐ ML ☐ SC
☑ SM ☐ SP ☐ SW ☐ GC ☐ GM ☐ GP ☐ GW

QUALIFIERS: ☐ TRACE ☐ MINOR ☐ SOME; SAND SIZE ☐ FINE ☐ MEDIUM ☐ COARSE

MOISTURE: ☑ DRY ☐ MOIST ☐ WET

SAMPLE CONTAINERS (NUMBER AND TYPE) 2, ziploc

ANALYSES: Ra-226, Metals

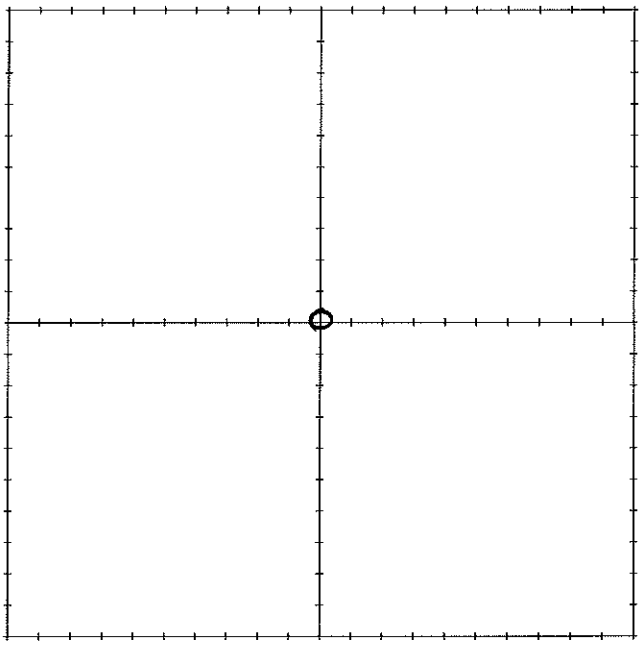

MARK INDIVIDUAL GRAB SAMPLE LOCATIONS IN GRID

MWH

SURFACE SOIL SAMPLE LOG FORM

AREA #/NAME Barton 3

SAMPLE I.D. S220 - BG1 - 00Y

SAMPLE COLLECTION DATE 10/6/16

SAMPLE COLLECTION TIME 1026

SAMPLE COLLECTED BY C. Lee

WEATHER CONDITIONS 55°, cloudy, slight wind

FIELD USCS DESCRIPTIONS Silty Sand

MAJOR DIVISIONS: ☐ OH ☐ CH ☐ MH ☐ OH ☐ CL ☐ ML ☐ SC
☒ SM ☐ SP ☐ SW ☐ GC ☐ GM ☐ GP ☐ GW

QUALIFIERS: ☐ TRACE ☐ MINOR ☐ SOME; SAND SIZE ☐ FINE ☐ MEDIUM ☐ COARSE

MOISTURE: ☒ DRY ☐ MOIST ☐ WET

SAMPLE CONTAINERS (NUMBER AND TYPE) 2, ziploc

ANALYSES: Ra-226, Metals

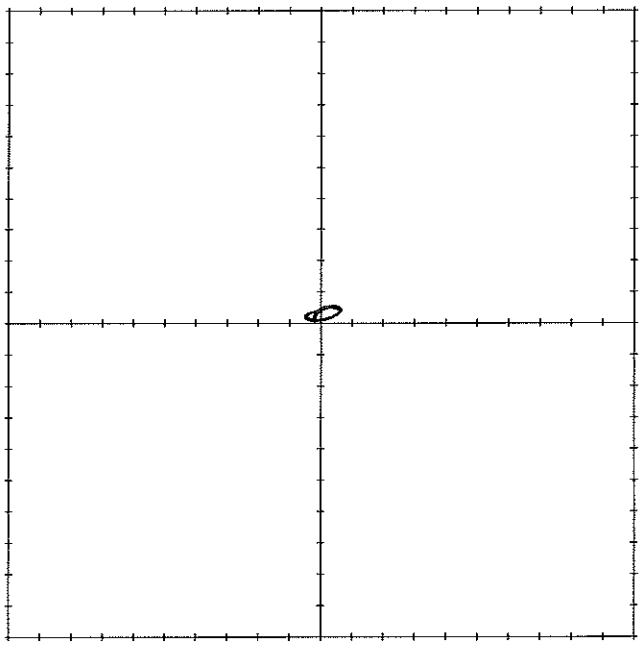

MARK INDIVIDUAL GRAB SAMPLE LOCATIONS IN GRID

MWH

SURFACE SOIL SAMPLE LOG FORM

AREA #/NAME Barton 3

SAMPLE I.D. S220-3G1-009

SAMPLE COLLECTION DATE 10/6/16

SAMPLE COLLECTION TIME 1032

SAMPLE COLLECTED BY C. Lee

WEATHER CONDITIONS 55°, cloudy, slight wind

FIELD USCS DESCRIPTIONS Silty Sand

MAJOR DIVISIONS: ☐ OH ☐ CH ☐ MH ☐ OH ☐ CL ☐ ML ☐ SC
☒ SM ☐ SP ☐ SW ☐ GC ☐ GM ☐ GP ☐ GW

QUALIFIERS: ☐ TRACE ☐ MINOR ☐ SOME; SAND SIZE ☐ FINE ☐ MEDIUM ☐ COARSE

MOISTURE: ☒ DRY ☐ MOIST ☐ WET

SAMPLE CONTAINERS (NUMBER AND TYPE) 2, ziploc

ANALYSES: Ra-226, Metals

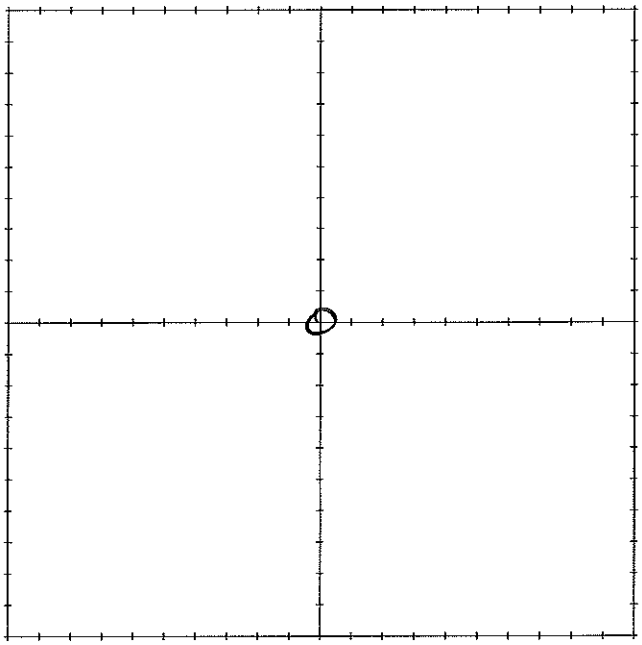

MARK INDIVIDUAL GRAB SAMPLE LOCATIONS IN GRID

MWH

SURFACE SOIL SAMPLE LOG FORM

AREA #/NAME Barta 3

SAMPLE I.D. S220-BG1-010

SAMPLE COLLECTION DATE 10/6/16

SAMPLE COLLECTION TIME 1037

SAMPLE COLLECTED BY C. Lee

WEATHER CONDITIONS 55°, cloudy, slight wind

FIELD USCS DESCRIPTIONS silty sand

MAJOR DIVISIONS: ☐ OH ☐ CH ☐ MH ☐ OH ☐ CL ☐ ML ☐ SC
☒ SM ☐ SP ☐ SW ☐ GC ☐ GM ☐ GP ☐ GW

QUALIFIERS: ☐ TRACE ☐ MINOR ☐ SOME; SAND SIZE ☐ FINE ☐ MEDIUM ☐ COARSE

MOISTURE: ☒ DRY ☐ MOIST ☐ WET

SAMPLE CONTAINERS (NUMBER AND TYPE) 2, ziplock

ANALYSES: Ra-226, Metals

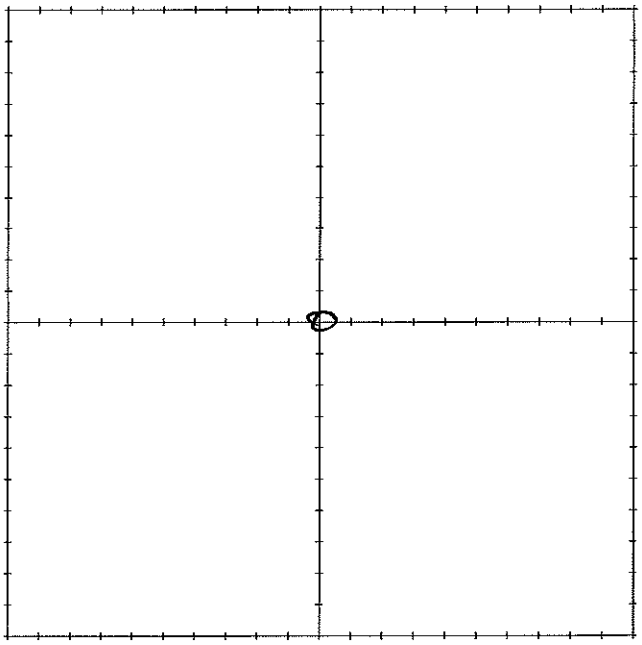

MARK INDIVIDUAL GRAB SAMPLE LOCATIONS IN GRID

MWH

SURFACE SOIL SAMPLE LOG FORM

AREA #/NAME Barton 3

SAMPLE I.D. S220-BG1-011

SAMPLE COLLECTION DATE 3/23/2017

SAMPLE COLLECTION TIME 1005

SAMPLE COLLECTED BY KJ, JP

WEATHER CONDITIONS Windy, overcast, 45° F

FIELD USCS DESCRIPTIONS Brown moist sandy silt.

MAJOR DIVISIONS: ☐ OH ☐ CH ☐ MH ☐ OH ☐ CL ☒ ML ☐ SC
☐ SM ☐ SP ☐ SW ☐ GC ☐ GM ☐ GP ☐ GW

QUALIFIERS: ☐ TRACE ☐ MINOR ☐ SOME; SAND SIZE ☒ FINE ☐ MEDIUM ☐ COARSE

MOISTURE: ☐ DRY ☒ MOIST ☐ WET

MUNSELL COLOR N/A

SAMPLE CONTAINERS (NUMBER AND TYPE) 2 ziploes

ANALYSES: Metals Ra-226

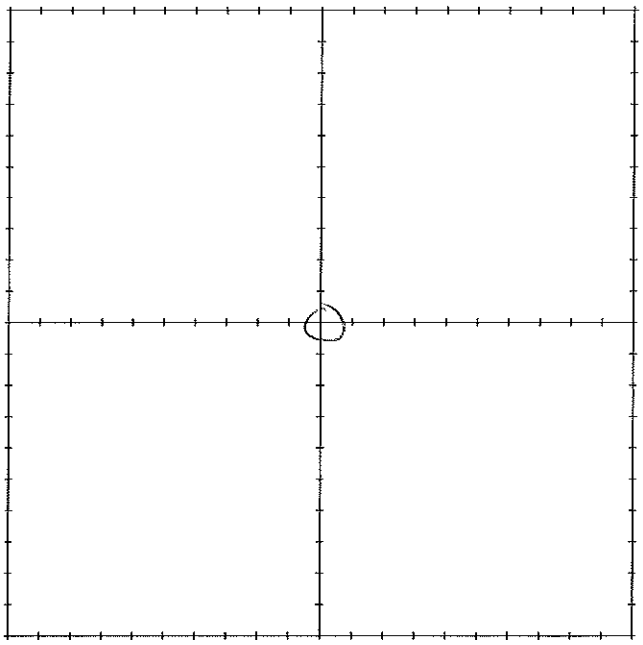

MARK INDIVIDUAL GRAB SAMPLE LOCATIONS IN GRID

MWH

SURFACE SOIL SAMPLE LOG FORM

AREA #/NAME Barton 3

SAMPLE I.D. S220-B41-012

SAMPLE COLLECTION DATE 3/23/2017

SAMPLE COLLECTION TIME ~~1005~~ KJ 1013

SAMPLE COLLECTED BY KJ, JP

WEATHER CONDITIONS Overcast, windy, 45°F

FIELD USCS DESCRIPTIONS Moist sandy silt

MAJOR DIVISIONS: ☐ OH ☐ CH ☐ MH ☐ OH ☐ CL ☒ ML ☐ SC
☐ SM ☐ SP ☐ SW ☐ GC ☐ GM ☐ GP ☐ GW

QUALIFIERS: ☐ TRACE ☐ MINOR ☐ SOME; SAND SIZE ☒ FINE ☐ MEDIUM ☐ COARSE

MOISTURE: ☐ DRY ☒ MOIST ☐ WET

MUNSELL COLOR NA

SAMPLE CONTAINERS (NUMBER AND TYPE) 2 ziplocs

ANALYSES: Ra-226, Metals

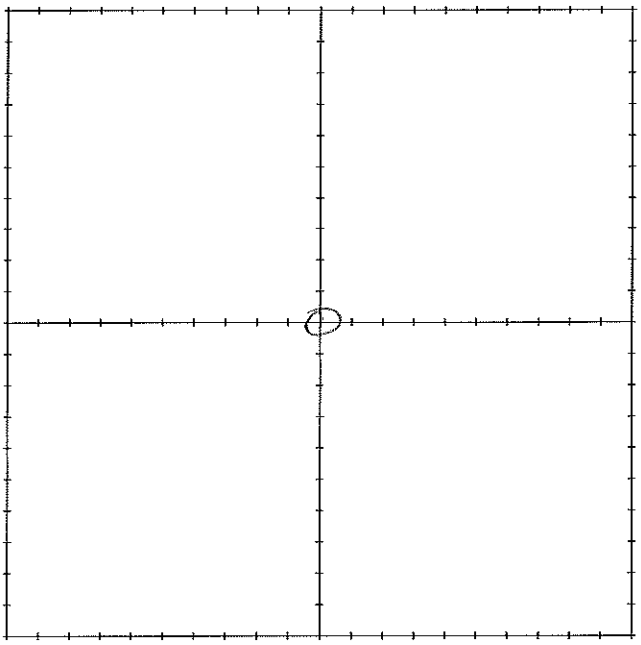

MARK INDIVIDUAL GRAB SAMPLE LOCATIONS IN GRID

MWH

SURFACE SOIL SAMPLE LOG FORM

AREA #/NAME Barton 3

SAMPLE I.D. S220-RG1-013

SAMPLE COLLECTION DATE 3/23/2017

SAMPLE COLLECTION TIME 1017

SAMPLE COLLECTED BY KJ, JP

WEATHER CONDITIONS Overcast, windy, 45°F

FIELD USCS DESCRIPTIONS Moist silty sand

MAJOR DIVISIONS: ☐ OH ☐ CH ☐ MH ☐ OH ☐ CL ☐ ML ☐ SC
☒ SM ☐ SP ☐ SW ☐ GC ☐ GM ☐ GP ☐ GW

QUALIFIERS: ☐ TRACE ☐ MINOR ☐ SOME; SAND SIZE ☒ FINE ☐ MEDIUM ☐ COARSE

MOISTURE: ☐ DRY ☒ MOIST ☐ WET

MUNSELL COLOR NA

SAMPLE CONTAINERS (NUMBER AND TYPE) 2 ziplocs

ANALYSES: Metals, Ra-226

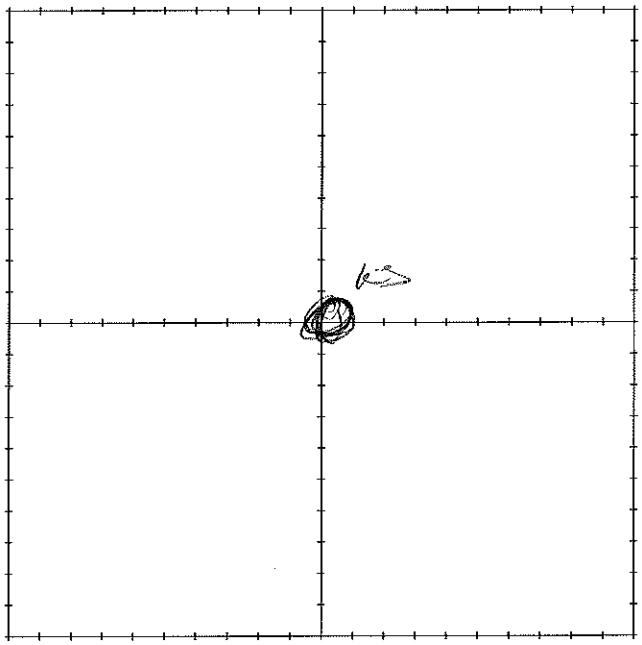

MARK INDIVIDUAL GRAB SAMPLE LOCATIONS IN GRID

MWH

SURFACE SOIL SAMPLE LOG FORM

AREA #/NAME Barton 3

SAMPLE I.D. S220 - RG1 - 014

SAMPLE COLLECTION DATE 3/23/2017

SAMPLE COLLECTION TIME 1023

SAMPLE COLLECTED BY KS, JP

WEATHER CONDITIONS Overcast, windy, 45°C

FIELD USCS DESCRIPTIONS Dry, fine grained ~~coarse~~ KS sand w/ coarse sand & 5-10% Gravels

MAJOR DIVISIONS: ☐ OH ☐ CH ☐ MH ☐ OH ☐ CL ☐ ML ☐ SC
☐ SM ☐ SP ☒ SW ☐ GC ☐ GM ☐ GP ☐ GW

QUALIFIERS: ☐ TRACE ☒ MINOR ☐ SOME; SAND SIZE ☒ FINE ☐ MEDIUM ☒ COARSE

MOISTURE: ☒ DRY ☐ MOIST ☐ WET

MUNSELL COLOR NA

SAMPLE CONTAINERS (NUMBER AND TYPE) 2 ziplocs

ANALYSES: Ra-226, Metals

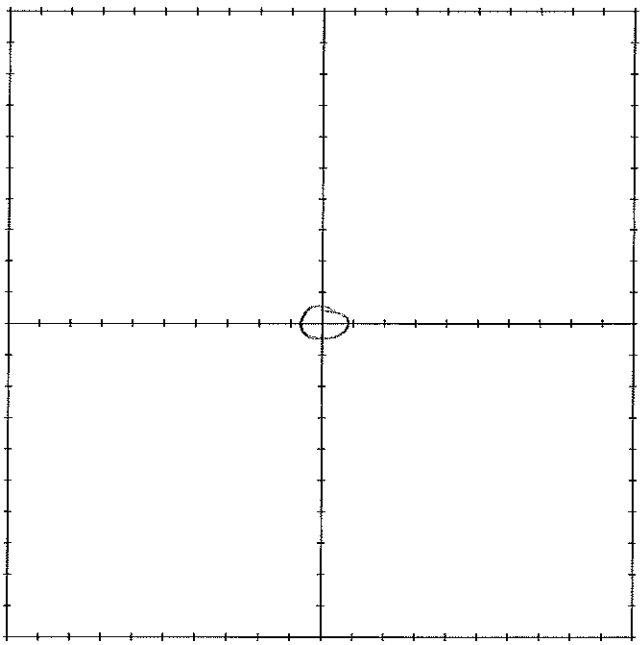

MARK INDIVIDUAL GRAB SAMPLE LOCATIONS IN GRID

MWH

SURFACE SOIL SAMPLE LOG FORM

AREA #/NAME Barton 3

SAMPLE I.D. 3220 - B3G1 - 015

SAMPLE COLLECTION DATE 3/23/2017

SAMPLE COLLECTION TIME 1027

SAMPLE COLLECTED BY KS, JP

WEATHER CONDITIONS Overcast, windy 45°F

FIELD USCS DESCRIPTIONS Fine to medium grained sand w/ trace coarse sand Dry.

MAJOR DIVISIONS: ☐ OH ☐ CH ☐ MH ☐ OH ☐ CL ☐ ML ☐ SC ☐ SM ☐ SP ☒ SW ☐ GC ☐ GM ☐ GP ☐ GW

QUALIFIERS: ☑ TRACE ☐ MINOR ☐ SOME; SAND SIZE ☑ FINE ☑ MEDIUM ☑ COARSE

MOISTURE: ☒ DRY ☐ MOIST ☐ WET

MUNSELL COLOR NA

SAMPLE CONTAINERS (NUMBER AND TYPE) 2 Ziplocs

ANALYSES: Ra-226, Metals

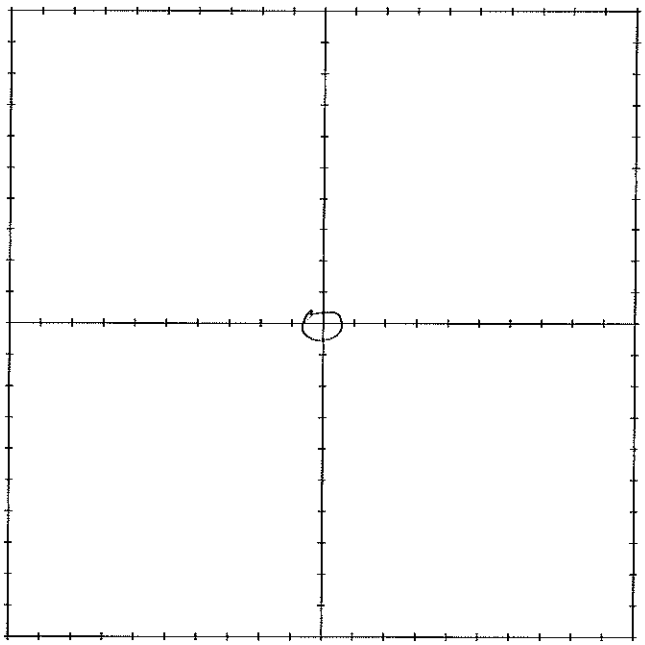

MARK INDIVIDUAL GRAB SAMPLE LOCATIONS IN GRID

MWH

SURFACE SOIL SAMPLE LOG FORM

AREA #/NAME Barton 3

SAMPLE I.D. S220-BG2-001

SAMPLE COLLECTION DATE 10/3/16

SAMPLE COLLECTION TIME 1030

SAMPLE COLLECTED BY C. Lee

WEATHER CONDITIONS 60°, windy

FIELD USCS DESCRIPTIONS silt w/ gravels

MAJOR DIVISIONS: ☐ OH ☐ CH ☐ MH ☐ OH ☐ CL ☐ ML ☐ SC
☒ SM ☐ SP ☐ SW ☐ GC ☐ GM ☐ GP ☐ GW

QUALIFIERS: ☒ TRACE ☐ MINOR ☐ SOME; SAND SIZE ☐ FINE ☐ MEDIUM ☒ COARSE

MOISTURE: ☒ DRY ☐ MOIST ☐ WET

SAMPLE CONTAINERS (NUMBER AND TYPE) 2, ziploc

ANALYSES: Ra-226, Metals

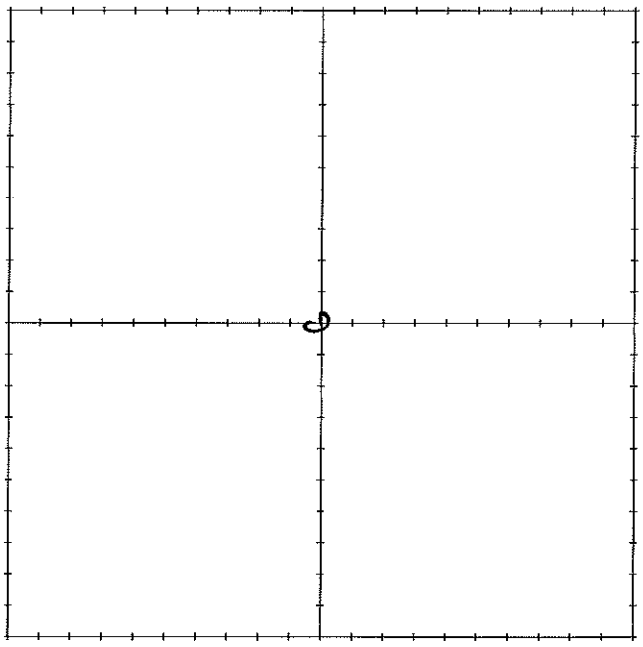

MARK INDIVIDUAL GRAB SAMPLE LOCATIONS IN GRID

MWH

SURFACE SOIL SAMPLE LOG FORM

AREA #/NAME Barton 3

SAMPLE I.D. S220-BG2-002

SAMPLE COLLECTION DATE 10/3/16

SAMPLE COLLECTION TIME 1038

SAMPLE COLLECTED BY C. Lee

WEATHER CONDITIONS 60°, windy

FIELD USCS DESCRIPTIONS silt w/gravels

MAJOR DIVISIONS: ☐ OH ☐ CH ☐ MH ☐ OH ☐ CL ☐ ML ☐ SC
☒ SM ☐ SP ☐ SW ☐ GC ☐ GM ☐ GP ☐ GW

QUALIFIERS: ☒ TRACE ☐ MINOR ☐ SOME; SAND SIZE ☐ FINE ☐ MEDIUM ☒ COARSE

MOISTURE: ☒ DRY ☐ MOIST ☐ WET

SAMPLE CONTAINERS (NUMBER AND TYPE) 2, ziploc

ANALYSES: Ra-226, Metals

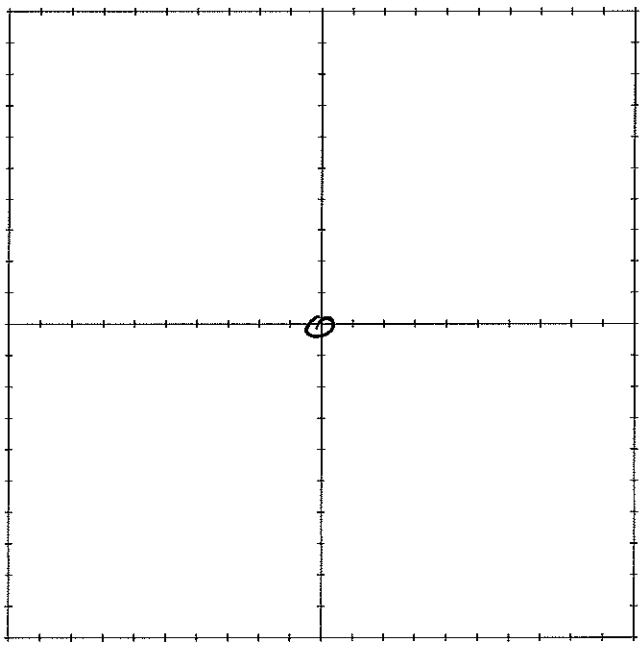

MARK INDIVIDUAL GRAB SAMPLE LOCATIONS IN GRID

MWH

SURFACE SOIL SAMPLE LOG FORM

AREA #/NAME Barton 3

SAMPLE I.D. S220-BG2-003

SAMPLE COLLECTION DATE 10/3/06

SAMPLE COLLECTION TIME 1046

SAMPLE COLLECTED BY C. Lee

WEATHER CONDITIONS 60°, windy

FIELD USCS DESCRIPTIONS silt w/ gravel

MAJOR DIVISIONS: ☐ OH ☐ CH ☐ MH ☐ OH ☐ CL ☐ ML ☐ SC
☒ SM ☐ SP ☐ SW ☐ GC ☐ GM ☐ GP ☐ GW

QUALIFIERS: ☒ TRACE ☐ MINOR ☐ SOME; SAND SIZE ☐ FINE ☐ MEDIUM ☒ COARSE

MOISTURE: ☒ DRY ☐ MOIST ☐ WET

SAMPLE CONTAINERS (NUMBER AND TYPE) 2, ziploc

ANALYSES: Ra-226, Metals

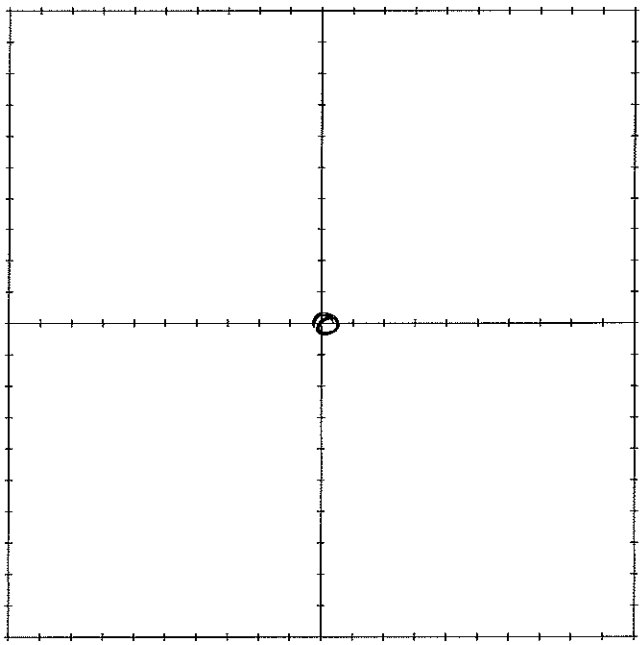

MARK INDIVIDUAL GRAB SAMPLE LOCATIONS IN GRID

MWH

SURFACE SOIL SAMPLE LOG FORM

AREA #/NAME Barton 3

SAMPLE I.D. S220-BG2-004

SAMPLE COLLECTION DATE 10/3/16

SAMPLE COLLECTION TIME 1054

SAMPLE COLLECTED BY C. Lee

WEATHER CONDITIONS 60°, windy

FIELD USCS DESCRIPTIONS silt w/ gravels

MAJOR DIVISIONS: ☐ OH ☐ CH ☐ MH ☐ OH ☐ CL ☐ ML ☐ SC
☒ SM ☐ SP ☐ SW ☐ GC ☐ GM ☐ GP ☐ GW

QUALIFIERS: ☒ TRACE ☐ MINOR ☐ SOME; SAND SIZE ☐ FINE ☐ MEDIUM ☒ COARSE

MOISTURE: ☒ DRY ☐ MOIST ☐ WET

SAMPLE CONTAINERS (NUMBER AND TYPE) 2 ziploc

ANALYSES: Ra-226, Metals

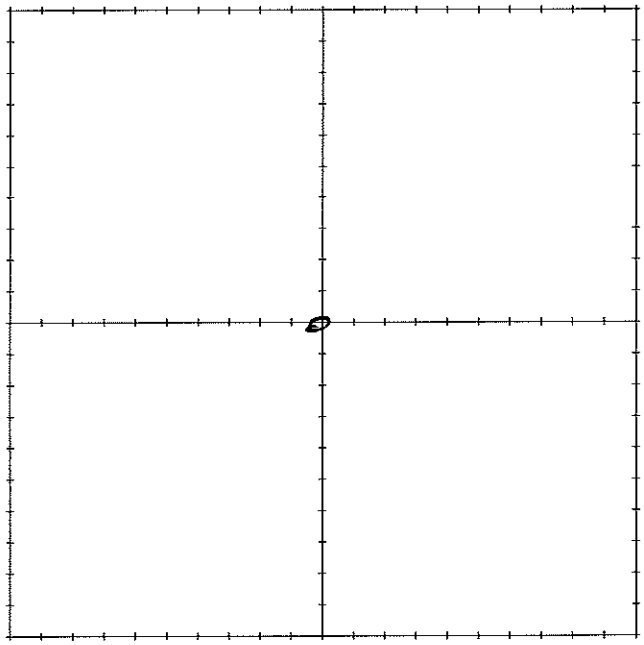

MARK INDIVIDUAL GRAB SAMPLE LOCATIONS IN GRID

MWH

SURFACE SOIL SAMPLE LOG FORM

AREA #/NAME Barton 3

SAMPLE I.D. S220 - BG2 - 005

SAMPLE COLLECTION DATE 10/3/16

SAMPLE COLLECTION TIME 1102

SAMPLE COLLECTED BY C. Lee

WEATHER CONDITIONS 60°, windy

FIELD USCS DESCRIPTIONS silt w/ gravels

MAJOR DIVISIONS: ☐ OH ☐ CH ☐ MH ☐ OH ☐ CL ☐ ML ☐ SC
☒ SM ☐ SP ☐ SW ☐ GC ☐ GM ☐ GP ☐ GW

QUALIFIERS: ☒ TRACE ☐ MINOR ☐ SOME; SAND SIZE ☐ FINE ☐ MEDIUM ☒ COARSE

MOISTURE: ☒ DRY ☐ MOIST ☐ WET

SAMPLE CONTAINERS (NUMBER AND TYPE) 2, ziploc

ANALYSES: Ra-226, Metals

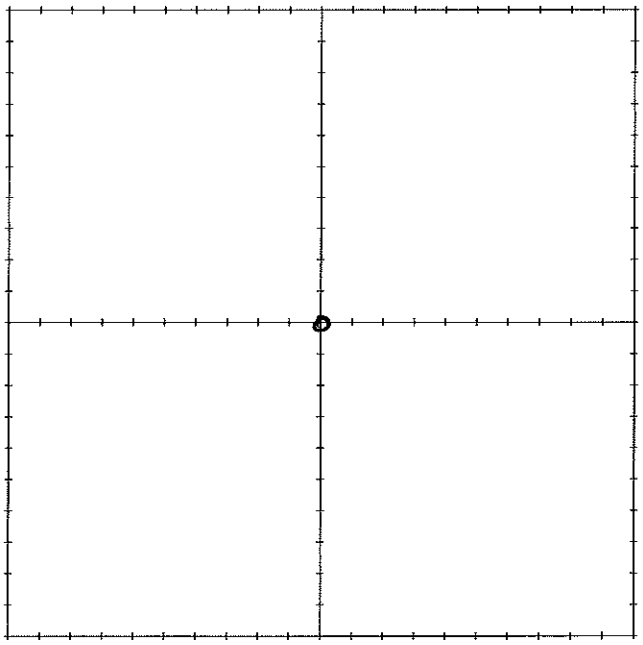

MARK INDIVIDUAL GRAB SAMPLE LOCATIONS IN GRID

MWH

SURFACE SOIL SAMPLE LOG FORM

AREA #/NAME Barton 3

SAMPLE I.D. S220-BG2-006, 206 (Dup)

SAMPLE COLLECTION DATE 10/3/16

SAMPLE COLLECTION TIME 1110

SAMPLE COLLECTED BY C. Lee

WEATHER CONDITIONS 60°, windy

FIELD USCS DESCRIPTIONS silt w/ gravels

MAJOR DIVISIONS: ☐ OH ☐ CH ☐ MH ☐ OH ☐ CL ☐ ML ☐ SC
☒ SM ☐ SP ☐ SW ☐ GC ☐ GM ☐ GP ☐ GW

QUALIFIERS: ☒ TRACE ☐ MINOR ☐ SOME; SAND SIZE ☐ FINE ☐ MEDIUM ☒ COARSE

MOISTURE: ☒ DRY ☐ MOIST ☐ WET

SAMPLE CONTAINERS (NUMBER AND TYPE) 2, ziplx

ANALYSES: Ra-226, Metals.

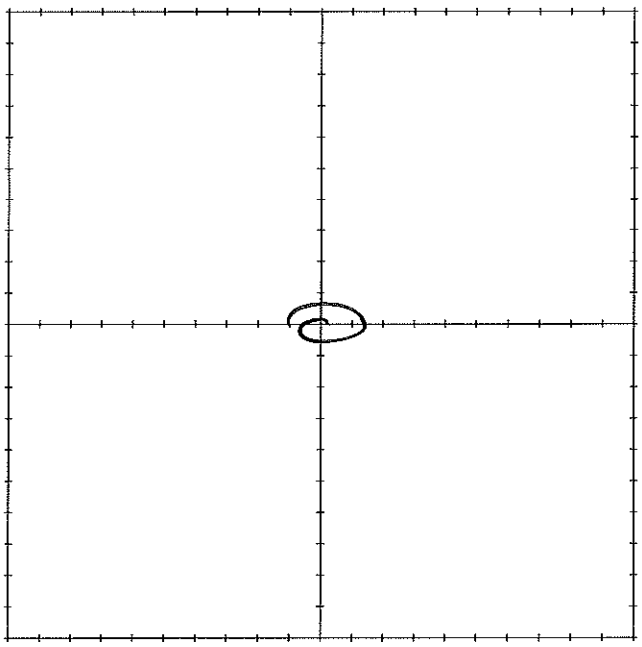

MARK INDIVIDUAL GRAB SAMPLE LOCATIONS IN GRID

MWH

SURFACE SOIL SAMPLE LOG FORM

AREA #/NAME Barton 3

SAMPLE I.D. 8220-BG2-007

SAMPLE COLLECTION DATE 10/3/16

SAMPLE COLLECTION TIME 1130

SAMPLE COLLECTED BY C. Lee

WEATHER CONDITIONS 60°, windy

FIELD USCS DESCRIPTIONS silt w/ gravels

MAJOR DIVISIONS: ☐ OH ☐ CH ☐ MH ☐ OH ☐ CL ☐ ML ☐ SC
☒ SM ☐ SP ☐ SW ☐ GC ☐ GM ☐ GP ☐ GW

QUALIFIERS: ☒ TRACE ☐ MINOR ☐ SOME; SAND SIZE ☐ FINE ☐ MEDIUM ☒ COARSE

MOISTURE: ☒ DRY ☐ MOIST ☐ WET

SAMPLE CONTAINERS (NUMBER AND TYPE) 2, ziploc

ANALYSES: Ra-226, Metals

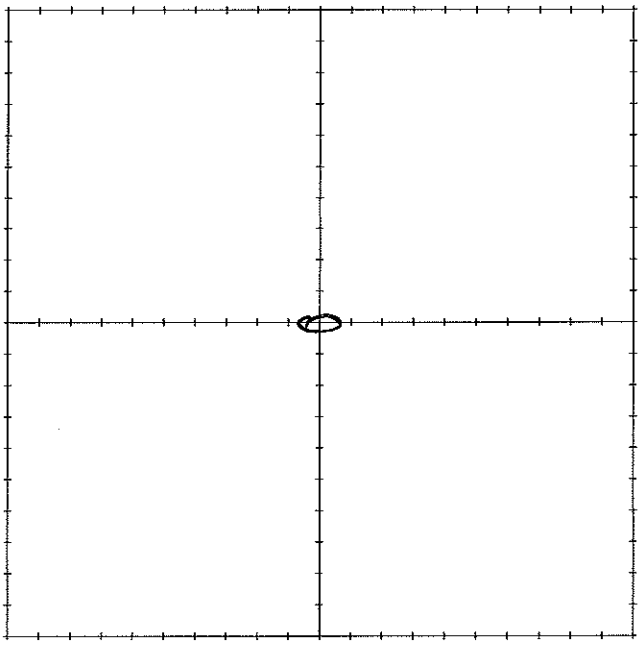

MARK INDIVIDUAL GRAB SAMPLE LOCATIONS IN GRID

MWH

SURFACE SOIL SAMPLE LOG FORM

AREA #/NAME Barton 3

SAMPLE I.D. S220-BG2-008

SAMPLE COLLECTION DATE 10/3/06

SAMPLE COLLECTION TIME 1140

SAMPLE COLLECTED BY C. Lee

WEATHER CONDITIONS 60°, windy

FIELD USCS DESCRIPTIONS silt w/ gravels

MAJOR DIVISIONS: ☐ OH ☐ CH ☐ MH ☐ OH ☐ CL ☐ ML ☐ SC
☒ SM ☐ SP ☐ SW ☐ GC ☐ GM ☐ GP ☐ GW

QUALIFIERS: ☒ TRACE ☐ MINOR ☐ SOME; SAND SIZE ☐ FINE ☐ MEDIUM ☒ COARSE

MOISTURE: ☒ DRY ☐ MOIST ☐ WET

SAMPLE CONTAINERS (NUMBER AND TYPE) 2, ziploc

ANALYSES: Ra-226, Metals

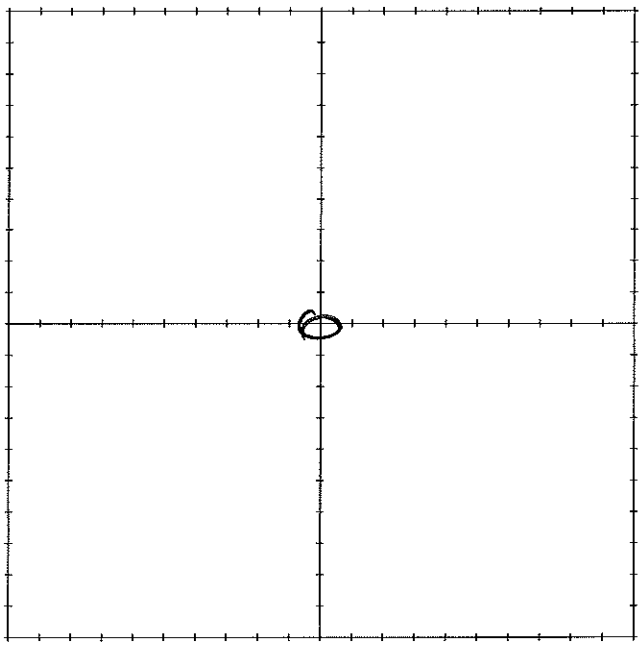

MARK INDIVIDUAL GRAB SAMPLE LOCATIONS IN GRID

MWH

SURFACE SOIL SAMPLE LOG FORM

AREA #/NAME Bantm 3

SAMPLE I.D. S220-BG2-009

SAMPLE COLLECTION DATE 10/3/16

SAMPLE COLLECTION TIME 1146

SAMPLE COLLECTED BY C. Lee

WEATHER CONDITIONS 60°, windy

FIELD USCS DESCRIPTIONS silt w/ gravel

MAJOR DIVISIONS: ☐ OH ☐ CH ☐ MH ☐ OH ☐ CL ☐ ML ☐ SC
☒ SM ☐ SP ☐ SW ☐ GC ☐ GM ☐ GP ☐ GW

QUALIFIERS: ☒ TRACE ☐ MINOR ☐ SOME; SAND SIZE ☐ FINE ☐ MEDIUM ☒ COARSE

MOISTURE: ☒ DRY ☐ MOIST ☐ WET

SAMPLE CONTAINERS (NUMBER AND TYPE) 2, ziplock

ANALYSES: Ra-226, Metals

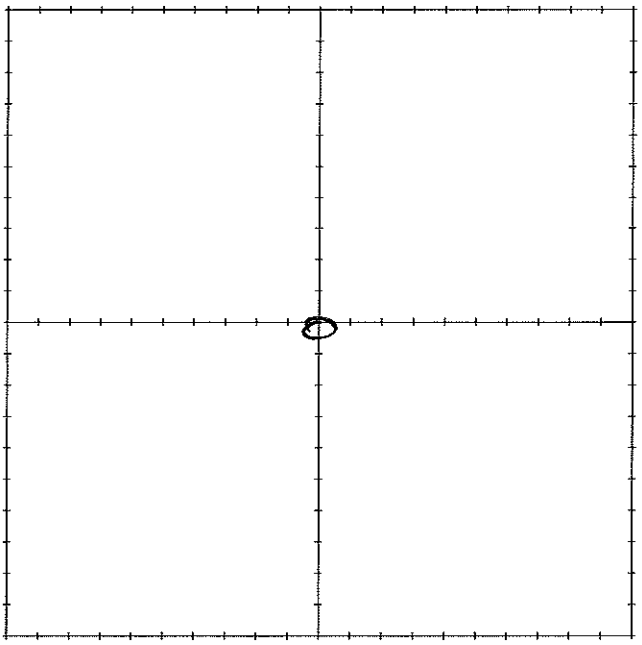

MARK INDIVIDUAL GRAB SAMPLE LOCATIONS IN GRID

MWH

SURFACE SOIL SAMPLE LOG FORM

AREA #/NAME Barton 3

SAMPLE I.D. S220-BG2-010

SAMPLE COLLECTION DATE 10/3/16

SAMPLE COLLECTION TIME 1152

SAMPLE COLLECTED BY C. Lee

WEATHER CONDITIONS 60°, windy

FIELD USCS DESCRIPTIONS silt w/ gravel

MAJOR DIVISIONS: ☐ OH ☐ CH ☐ MH ☐ OH ☐ CL ☐ ML ☐ SC
☒ SM ☐ SP ☐ SW ☐ GC ☐ GM ☐ GP ☐ GW

QUALIFIERS: ☒ TRACE ☐ MINOR ☐ SOME; SAND SIZE ☐ FINE ☐ MEDIUM ☒ COARSE

MOISTURE: ☒ DRY ☐ MOIST ☐ WET

SAMPLE CONTAINERS (NUMBER AND TYPE) 2, ziplock

ANALYSES: Ra-226, Metals

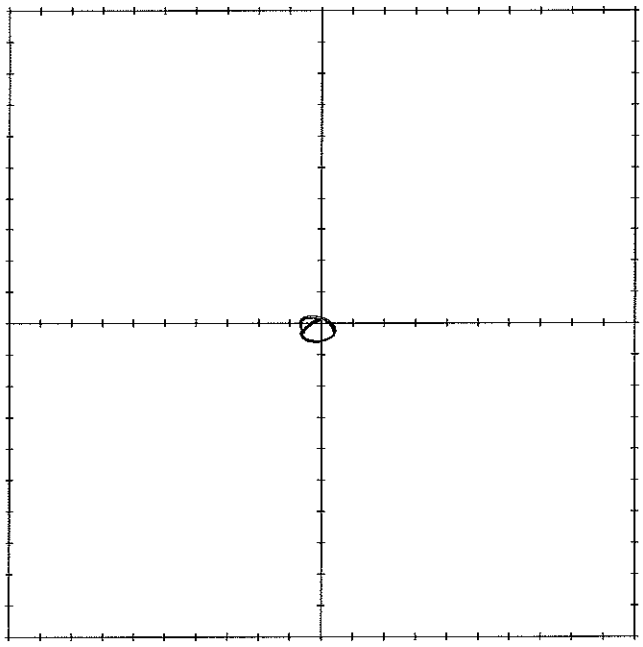

MARK INDIVIDUAL GRAB SAMPLE LOCATIONS IN GRID

MWH

SURFACE SOIL SAMPLE LOG FORM

AREA #/NAME Barton

SAMPLE I.D. S220-BG3-001

SAMPLE COLLECTION DATE 8/26/17

SAMPLE COLLECTION TIME 0940

SAMPLE COLLECTED BY CL

WEATHER CONDITIONS Sunny ~80°F

FIELD USCS DESCRIPTIONS (SP) Poorly graded fine sand Red Dry loose 100% sand minor plant roots + rocky debris

MAJOR DIVISIONS: ☐ OH ☐ CH ☐ MH ☐ OH ☐ CL ☐ ML ☐ SC ☐ SM ☒ SP ☐ SW ☐ GC ☐ GM ☐ GP ☐ GW

QUALIFIERS: ☐ TRACE ☒ MINOR ☐ SOME; SAND SIZE ☐ FINE ☐ MEDIUM ☐ COARSE

MOISTURE: ☒ DRY ☐ MOIST ☐ WET

SAMPLE CONTAINERS (NUMBER AND TYPE) 2 Ziplocks

ANALYSES: Ra-226, Metals

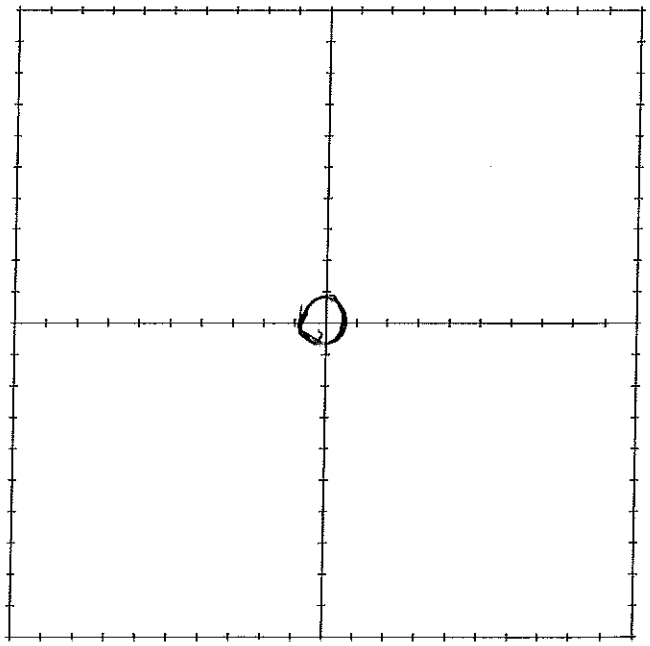

MARK INDIVIDUAL GRAB SAMPLE LOCATIONS IN GRID

MWH

SURFACE SOIL SAMPLE LOG FORM

AREA #/NAME Bartow

SAMPLE I.D. S220-B63-002

SAMPLE COLLECTION DATE 8/26/17

SAMPLE COLLECTION TIME 0955

SAMPLE COLLECTED BY CL

WEATHER CONDITIONS Sunny ~80° F

FIELD USCS DESCRIPTIONS (SP) Poorly graded sand, Red, Dry, loose, trace coarse sand and gravel, gravels are subrounded, white

MAJOR DIVISIONS: ☐ OH ☐ CH ☐ MH ☐ OH ☐ CL ☐ ML ☐ SC ☐ SM ☑ SP ☐ SW ☐ GC ☐ GM ☐ GP ☐ GW

QUALIFIERS: ☑ TRACE ☐ MINOR ☐ SOME; SAND SIZE ☐ FINE ☐ MEDIUM ☑ COARSE

MOISTURE: ☑ DRY ☐ MOIST ☐ WET

SAMPLE CONTAINERS (NUMBER AND TYPE) 2 Ziploks

ANALYSES: Ra-226, Metals

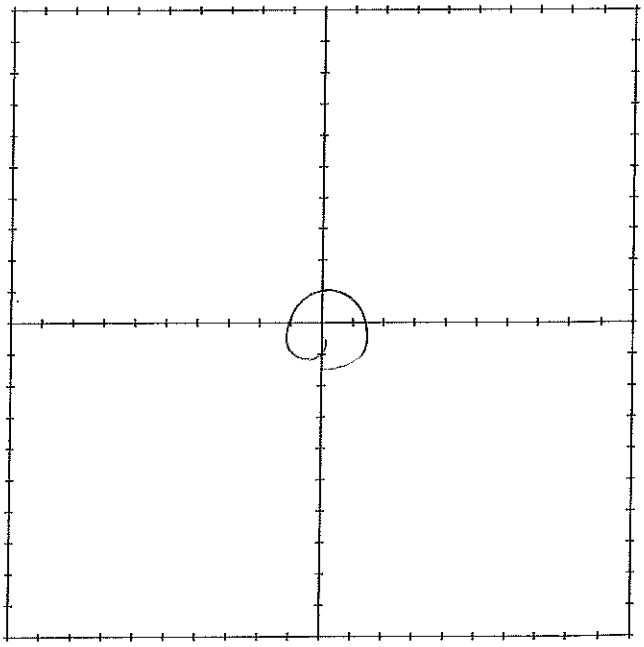

MARK INDIVIDUAL GRAB SAMPLE LOCATIONS IN GRID

MWH

SURFACE SOIL SAMPLE LOG FORM

AREA #/NAME Barton

SAMPLE I.D. S220-BG3-003

SAMPLE COLLECTION DATE 8/26/17

SAMPLE COLLECTION TIME 1000

SAMPLE COLLECTED BY CL

WEATHER CONDITIONS Sunny 80 F

FIELD USCS DESCRIPTIONS (SP) Poorly graded ~~Sand~~ Red (95%) Fine Sand (5%) Gravel Dry, loose, Granules are white subangular

MAJOR DIVISIONS: ☐ OH ☐ CH ☐ MH ☐ OH ☐ CL ☐ ML ☐ SC ☐ SM ☒ SP ☐ SW ☐ GC ☐ GM ☐ GP ☐ GW

QUALIFIERS: ☐ TRACE ☒ MINOR ☐ SOME; SAND SIZE ☐ FINE ☐ MEDIUM ☐ COARSE

MOISTURE: ☒ DRY ☐ MOIST ☐ WET

SAMPLE CONTAINERS (NUMBER AND TYPE) 2 Ziplocks

ANALYSES: Ra-226, Metals

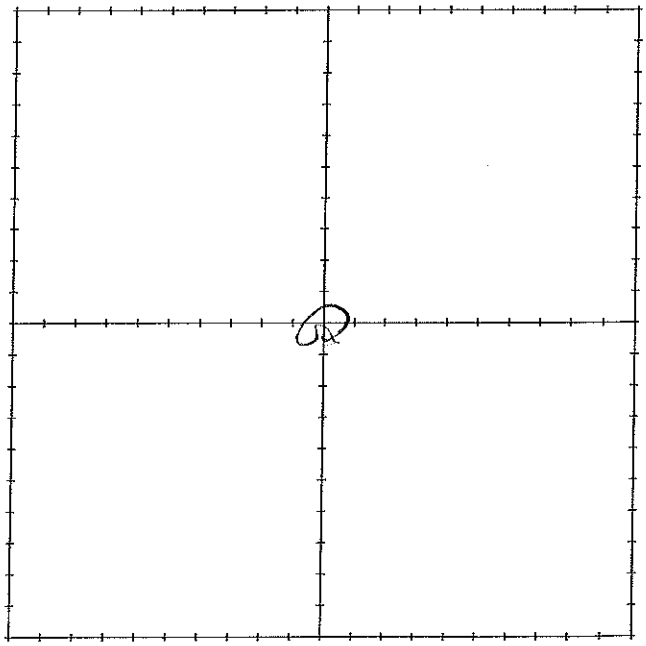

MARK INDIVIDUAL GRAB SAMPLE LOCATIONS IN GRID

MWH

SURFACE SOIL SAMPLE LOG FORM

AREA #/NAME Barton

SAMPLE I.D. S220 - B63 - 004

SAMPLE COLLECTION DATE 8/26/17

SAMPLE COLLECTION TIME 10:05

SAMPLE COLLECTED BY CL

WEATHER CONDITIONS Sunny ~80° F

FIELD USCS DESCRIPTIONS (SP) Poorly graded sand, Red, loos, Dry (97%) fine sand (3%) Gravel gravel is subangular white

MAJOR DIVISIONS: ☐ OH ☐ CH ☐ MH ☐ OH ☐ CL ☐ ML ☐ SC ☐ SM ☐ SP ☐ SW ☐ GC ☐ GM ☐ GP ☐ GW

QUALIFIERS: ☐ TRACE ☒ MINOR ☐ SOME; SAND SIZE ☐ FINE ☐ MEDIUM ☐ COARSE

MOISTURE: ☒ DRY ☐ MOIST ☐ WET

SAMPLE CONTAINERS (NUMBER AND TYPE) 2 Ziplocks

ANALYSES: Ra-226 ; Metals

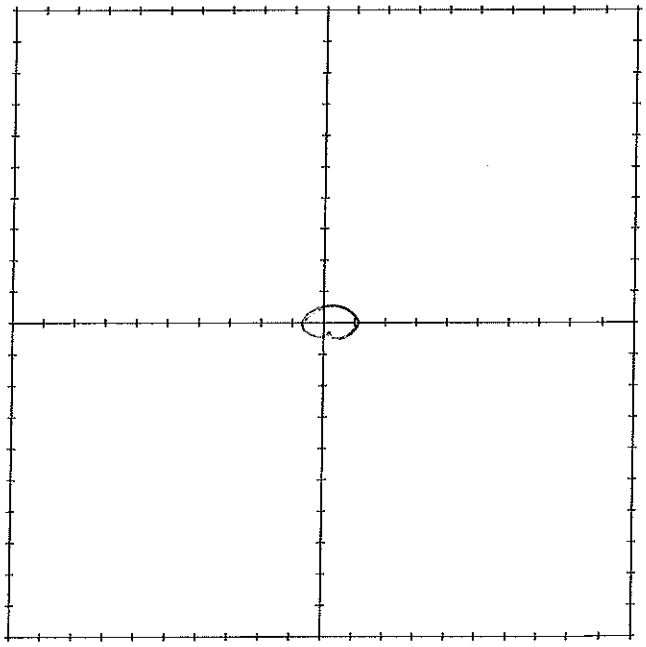

MARK INDIVIDUAL GRAB SAMPLE LOCATIONS IN GRID

MWH

SURFACE SOIL SAMPLE LOG FORM

AREA #/NAME Barton

SAMPLE I.D. S220-BG3-005

SAMPLE COLLECTION DATE 8/26/17

SAMPLE COLLECTION TIME 10:12

SAMPLE COLLECTED BY CL

WEATHER CONDITIONS Sunny ~80°F

FIELD USCS DESCRIPTIONS (SP) poorly graded fine sand Red Dry loose

MAJOR DIVISIONS: ☐ OH ☐ CH ☐ MH ☐ OH ☐ CL ☐ ML ☐ SC
☐ SM ☒ SP ☐ SW ☐ GC ☐ GM ☐ GP ☐ GW

QUALIFIERS: ☐ TRACE ☐ MINOR ☐ SOME; SAND SIZE ☐ FINE ☐ MEDIUM ☐ COARSE

MOISTURE: ☒ DRY ☐ MOIST ☐ WET

SAMPLE CONTAINERS (NUMBER AND TYPE) 2 Ziplocks

ANALYSES: Ra-226, Metals

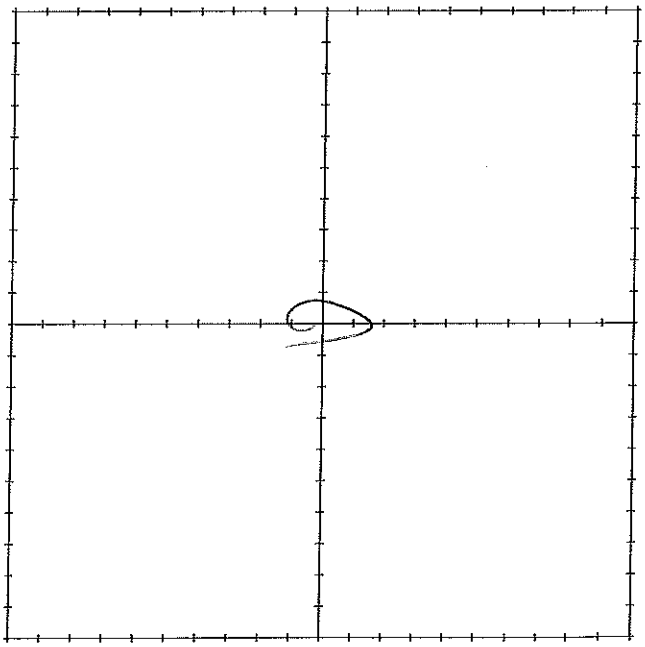

MARK INDIVIDUAL GRAB SAMPLE LOCATIONS IN GRID

MWH

SURFACE SOIL SAMPLE LOG FORM

AREA #/NAME Bartlett

SAMPLE I.D. SZ20 - BG3 - 006

SAMPLE COLLECTION DATE 8/26/17

SAMPLE COLLECTION TIME 1020

SAMPLE COLLECTED BY CL

WEATHER CONDITIONS Sunny ~80°F

FIELD USCS DESCRIPTIONS (SP) Poorly graded Sand, Red, Dry, loose, trace gravels (white) minor roots

MAJOR DIVISIONS: ☐ OH ☐ CH ☐ MH ☐ OH ☐ CL ☐ ML ☐ SC ☐ SM ☒ SP ☐ SW ☐ GC ☐ GM ☐ GP ☐ GW

QUALIFIERS: ☐ TRACE ☐ MINOR ☐ SOME; SAND SIZE ☐ FINE ☐ MEDIUM ☐ COARSE

MOISTURE: ☒ DRY ☐ MOIST ☐ WET

SAMPLE CONTAINERS (NUMBER AND TYPE) 2 Ziplocks

ANALYSES: Ra-226, Metals

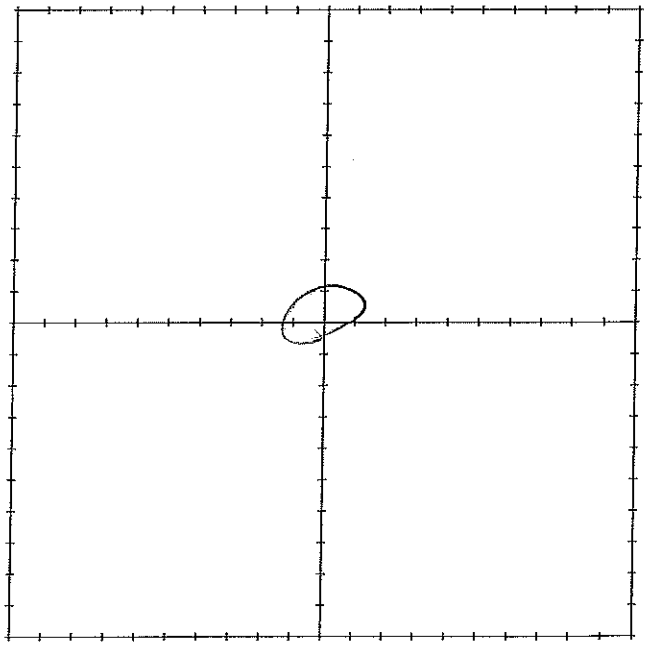

MARK INDIVIDUAL GRAB SAMPLE LOCATIONS IN GRID

MWH

SURFACE SOIL SAMPLE LOG FORM

AREA #/NAME Barton

SAMPLE I.D. S220-B63-0017

SAMPLE COLLECTION DATE 8/26/17

SAMPLE COLLECTION TIME 10:25

SAMPLE COLLECTED BY CL

WEATHER CONDITIONS Sunny ~80°F

FIELD USCS DESCRIPTIONS (SP) Poorly graded Sand, Red, Dry, loose

MAJOR DIVISIONS: ☐ OH ☐ CH ☐ MH ☐ OH ☐ CL ☐ ML ☐ SC 100% Fine Sand
☐ SM ☒ SP ☐ SW ☐ GC ☐ GM ☐ GP ☐ GW

QUALIFIERS: ☐ TRACE ☐ MINOR ☐ SOME; SAND SIZE ☐ FINE ☐ MEDIUM ☐ COARSE

MOISTURE: ☒ DRY ☐ MOIST ☐ WET

SAMPLE CONTAINERS (NUMBER AND TYPE) 2 Ziplocks

ANALYSES: Ra-226, Metals

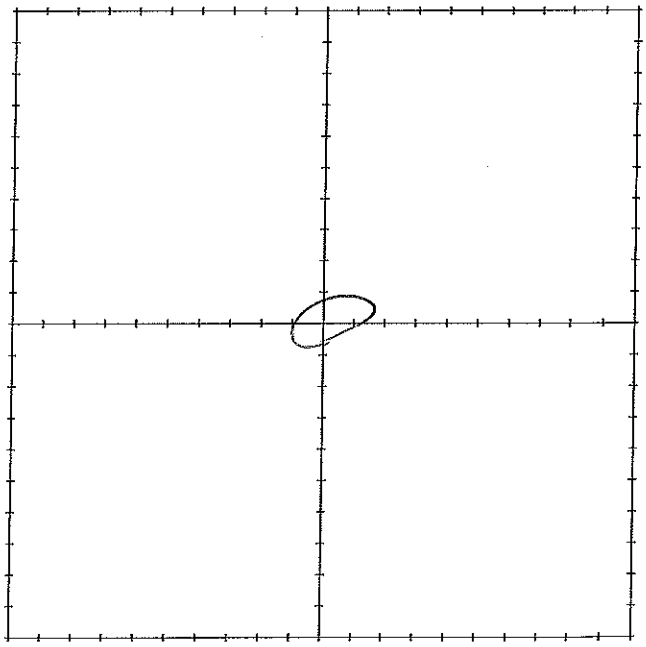

MARK INDIVIDUAL GRAB SAMPLE LOCATIONS IN GRID

MWH

SURFACE SOIL SAMPLE LOG FORM

AREA #/NAME Barton

SAMPLE I.D. S220 - BG3 - 008

SAMPLE COLLECTION DATE 8/26/17

SAMPLE COLLECTION TIME 10:40

SAMPLE COLLECTED BY CL

WEATHER CONDITIONS Sunny -80°F

FIELD USCS DESCRIPTIONS (SP) Poorly graded sand, Red, Dry, loose, (95%) fine sa (5%) gravel gravel is subangular white trace roots

MAJOR DIVISIONS: ☐ OH ☐ CH ☐ MH ☐ OH ☐ CL ☐ ML ☐ SC ☐ SM ☒ SP ☐ SW ☐ GC ☐ GM ☐ GP ☐ GW

QUALIFIERS: ☒ TRACE ☒ MINOR ☐ SOME; SAND SIZE ☐ FINE ☐ MEDIUM ☐ COARSE

MOISTURE: ☒ DRY ☐ MOIST ☐ WET

SAMPLE CONTAINERS (NUMBER AND TYPE) 2 Ziplocks

ANALYSES: Ra-226, Metals

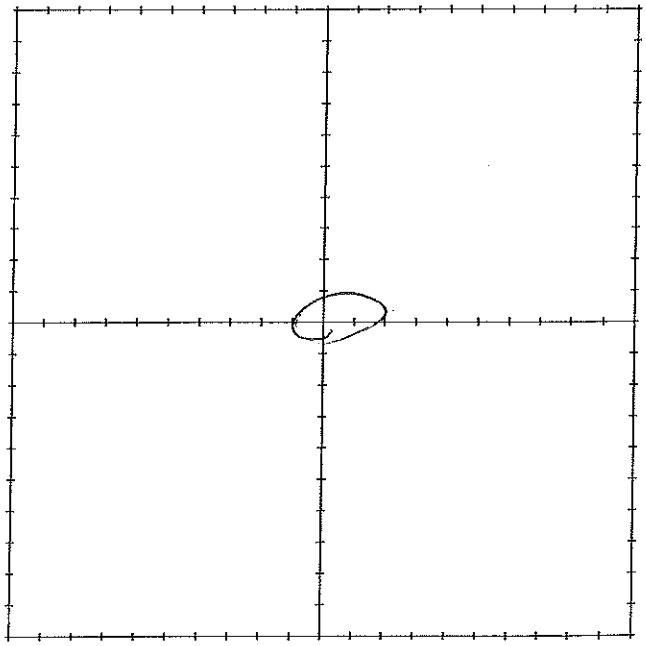

MARK INDIVIDUAL GRAB SAMPLE LOCATIONS IN GRID

MWH

SURFACE SOIL SAMPLE LOG FORM

AREA #/NAME Barton

SAMPLE I.D. 8220-BG3-009

SAMPLE COLLECTION DATE 8/26/17

SAMPLE COLLECTION TIME 11:00

SAMPLE COLLECTED BY CL

WEATHER CONDITIONS Sunny

FIELD USCS DESCRIPTIONS (SP) Poorly graded sand, Red, Dry, loose (95%) Fine sa
(5%) gravel gravels are subangular white

MAJOR DIVISIONS: ☐ OH ☐ CH ☐ MH ☐ OH ☐ CL ☐ ML ☐ SC
☐ SM ☒ SP ☐ SW ☐ GC ☐ GM ☐ GP ☐ GW

QUALIFIERS: ☐ TRACE ☐ MINOR ☐ SOME; SAND SIZE ☐ FINE ☐ MEDIUM ☐ COARSE

MOISTURE: ☒ DRY ☐ MOIST ☐ WET

SAMPLE CONTAINERS (NUMBER AND TYPE) 2 Ziplocks

ANALYSES: Ra-226, Metals

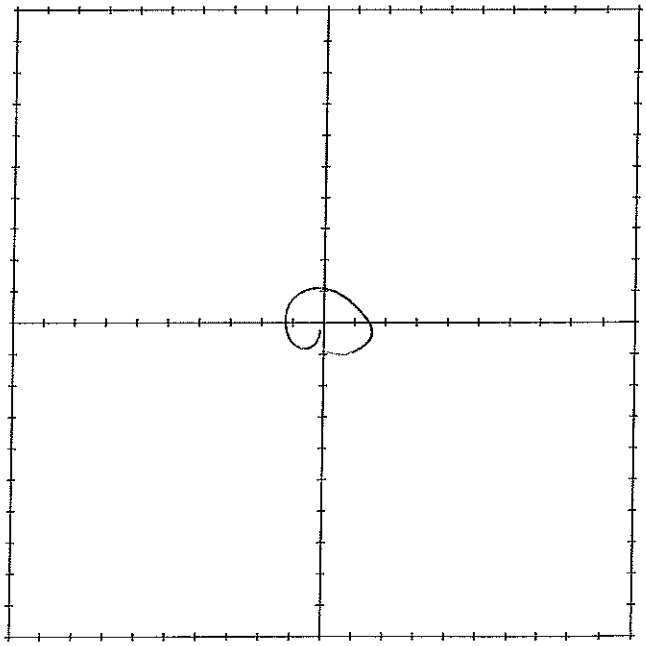

MARK INDIVIDUAL GRAB SAMPLE LOCATIONS IN GRID

MWH

SURFACE SOIL SAMPLE LOG FORM

AREA #/NAME Barton

SAMPLE I.D. SZ20-BG3-010 (+ Duplicate)

SAMPLE COLLECTION DATE 8/26/17

SAMPLE COLLECTION TIME 11:10

SAMPLE COLLECTED BY CL

WEATHER CONDITIONS Sunny ~80°F

FIELD USCS DESCRIPTIONS (SP) Poorly graded sand, Red, Dry, loose

MAJOR DIVISIONS: ☐ OH ☐ CH ☐ MH ☐ OH ☐ CL ☐ ML ☐ SC 100% Fine Sand
☐ SM ☒ SP ☐ SW ☐ GC ☐ GM ☐ GP ☐ GW

QUALIFIERS: ☐ TRACE ☐ MINOR ☐ SOME; SAND SIZE ☐ FINE ☐ MEDIUM ☐ COARSE

MOISTURE: ☒ DRY ☐ MOIST ☐ WET

SAMPLE CONTAINERS (NUMBER AND TYPE) 2 Ziplocks

ANALYSES: Ra-226, Metals

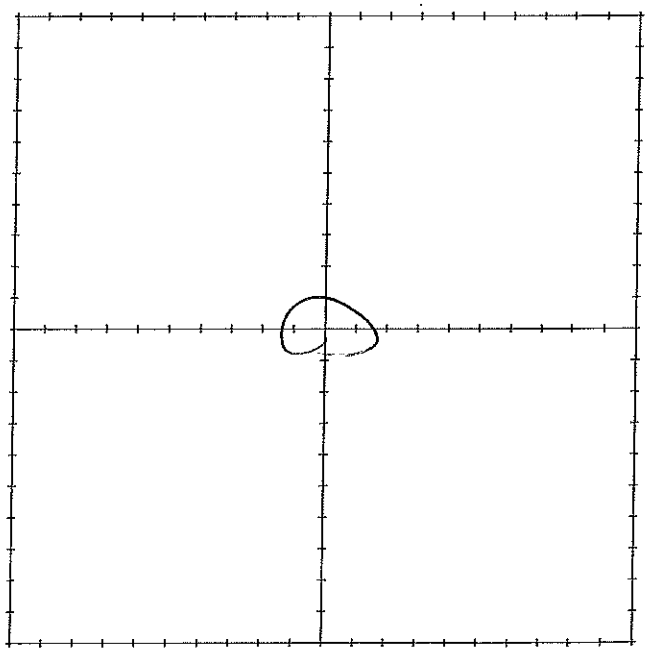

MARK INDIVIDUAL GRAB SAMPLE LOCATIONS IN GRID

MWH

SURFACE SOIL SAMPLE LOG FORM

AREA #/NAME 5220-101-001 (Barton 3)

SAMPLE I.D. 5220-101-001

SAMPLE COLLECTION DATE 10/14/16

SAMPLE COLLECTION TIME 1005

SAMPLE COLLECTED BY C. Lee

WEATHER CONDITIONS 70's, clear

FIELD USCS DESCRIPTIONS Brown sandy silt

MAJOR DIVISIONS: ☐ OH ☐ CH ☒ MH ☐ OH ☐ CL ☐ ML ☐ SC
☐ SM ☐ SP ☐ SW ☐ GC ☐ GM ☐ GP ☐ GW

QUALIFIERS: ☒ TRACE ☐ MINOR ☐ SOME; SAND SIZE ☐ FINE ☐ MEDIUM ☐ COARSE

MOISTURE: ☒ DRY ☐ MOIST ☐ WET

SAMPLE CONTAINERS (NUMBER AND TYPE) 1, ziplock

ANALYSES: Ra-226, Thorium

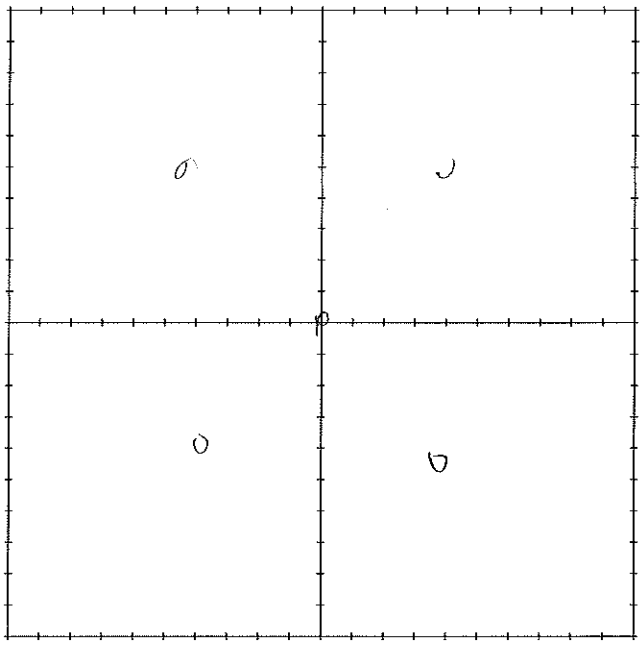

MARK INDIVIDUAL GRAB SAMPLE LOCATIONS IN GRID

MWH

SURFACE SOIL SAMPLE LOG FORM

AREA #/NAME S220-C02-001 (Burn 3)

SAMPLE I.D. S220-C02-001

SAMPLE COLLECTION DATE 10/14/16

SAMPLE COLLECTION TIME 1036

SAMPLE COLLECTED BY [illegible]

WEATHER CONDITIONS 70's, clear

FIELD USCS DESCRIPTIONS Lite Brown sandy silt

MAJOR DIVISIONS: ☐ OH ☐ CH ☒ MH ☐ OH ☐ CL ☐ ML ☐ SC
☐ SM ☐ SP ☐ SW ☐ GC ☐ GM ☐ GP ☐ GW

QUALIFIERS: ☒ TRACE ☐ MINOR ☐ SOME; SAND SIZE ☐ FINE ☐ MEDIUM ☐ COARSE

MOISTURE: ☒ DRY ☐ MOIST ☐ WET

SAMPLE CONTAINERS (NUMBER AND TYPE) 1, 2 ziplock

ANALYSES: Ra-226, Thorium.

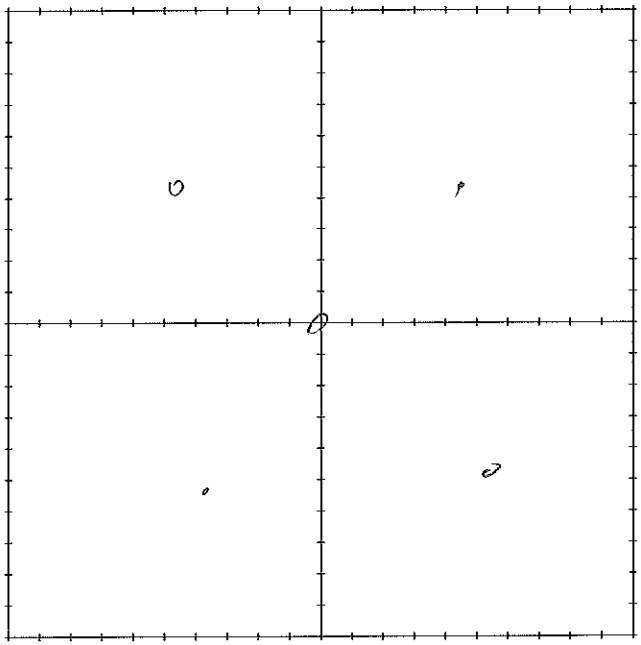

MARK INDIVIDUAL GRAB SAMPLE LOCATIONS IN GRID

MWH

SURFACE SOIL SAMPLE LOG FORM

AREA #/NAME: 5220-C03-001 (Barton 3)

SAMPLE I.D.: 5220 - C03-001

SAMPLE COLLECTION DATE: 10/14/16

SAMPLE COLLECTION TIME: 1115

SAMPLE COLLECTED BY: C. Lee

WEATHER CONDITIONS: 80's, clear

FIELD USCS DESCRIPTIONS: Light Brown, sandy silt

MAJOR DIVISIONS: ☐ OH ☐ CH ☒ MH ☐ OH ☐ CL ☐ ML ☐ SC
☐ SM ☐ SP ☐ SW ☐ GC ☐ GM ☐ GP ☐ GW

QUALIFIERS: ☒ TRACE ☐ MINOR ☐ SOME; SAND SIZE ☐ FINE ☐ MEDIUM ☐ COARSE

MOISTURE: ☒ DRY ☐ MOIST ☐ WET

SAMPLE CONTAINERS (NUMBER AND TYPE): 1, ziplock

ANALYSES: Ra-226, Thorium

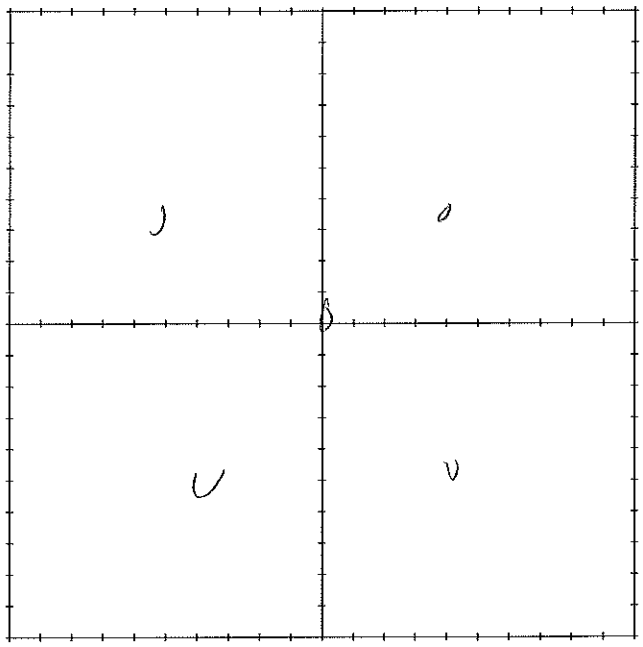

MARK INDIVIDUAL GRAB SAMPLE LOCATIONS IN GRID

MWH

SURFACE SOIL SAMPLE LOG FORM

AREA #/NAME 8220-004-001 (Bastion 3)

SAMPLE I.D. 8220-004-001

SAMPLE COLLECTION DATE 10/14/16

SAMPLE COLLECTION TIME 1145

SAMPLE COLLECTED BY C. Lee

WEATHER CONDITIONS 70's clear

FIELD USCS DESCRIPTIONS Light brown sandy silt

MAJOR DIVISIONS: ☐ OH ☐ CH ☒ MH ☐ OH ☐ CL ☐ ML ☐ SC
☐ SM ☐ SP ☐ SW ☐ GC ☐ GM ☐ GP ☐ GW

QUALIFIERS: ☒ TRACE ☐ MINOR ☐ SOME; SAND SIZE ☐ FINE ☐ MEDIUM ☐ COARSE

MOISTURE: ☒ DRY ☐ MOIST ☐ WET

SAMPLE CONTAINERS (NUMBER AND TYPE) 1 ziplock

ANALYSES: Ra-226, Uranium

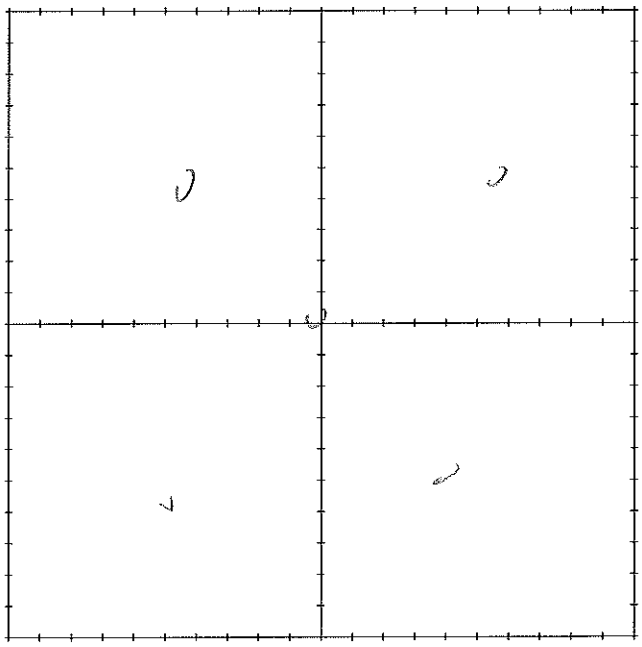

MARK INDIVIDUAL GRAB SAMPLE LOCATIONS IN GRID

MWH

SURFACE SOIL SAMPLE LOG FORM

AREA #/NAME S220-L05-001 (Barton 3)

SAMPLE I.D. S220-L05-001

SAMPLE COLLECTION DATE 10/14/16

SAMPLE COLLECTION TIME 1208

SAMPLE COLLECTED BY C. Lee

WEATHER CONDITIONS 70's, clear

FIELD USCS DESCRIPTIONS Brown Sandy Silt

MAJOR DIVISIONS: ☐ OH ☐ CH ☒ MH ☐ OH ☐ CL ☐ ML ☐ SC
☐ SM ☐ SP ☐ SW ☐ GC ☐ GM ☐ GP ☐ GW

QUALIFIERS: ☒ TRACE ☐ MINOR ☐ SOME; SAND SIZE ☐ FINE ☐ MEDIUM ☐ COARSE

MOISTURE: ☒ DRY ☐ MOIST ☐ WET

SAMPLE CONTAINERS (NUMBER AND TYPE) 1, ziplock

ANALYSES: Ra-226, Thorium

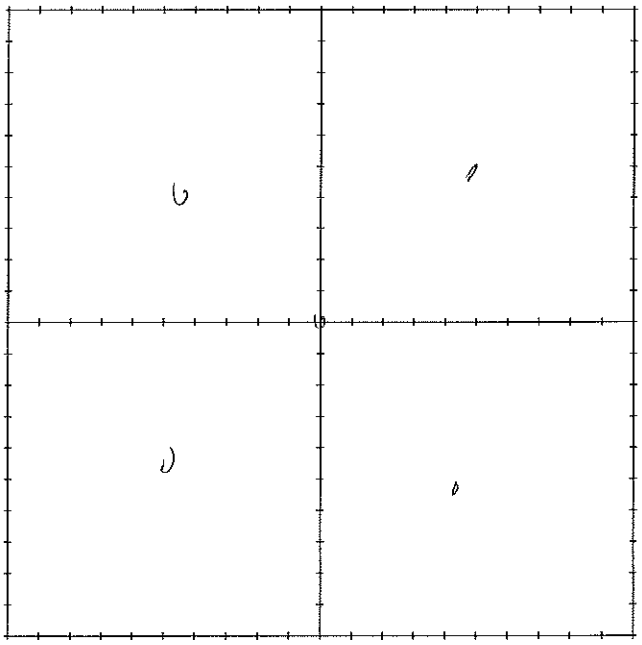

MARK INDIVIDUAL GRAB SAMPLE LOCATIONS IN GRID

MWH

SURFACE SOIL SAMPLE LOG FORM

AREA #/NAME S220-CX-001 Barton 3

SAMPLE I.D. S220-CX-001

SAMPLE COLLECTION DATE 4/15/17

SAMPLE COLLECTION TIME 1402

SAMPLE COLLECTED BY HW/LR

WEATHER CONDITIONS 70's, sunny

FIELD USCS DESCRIPTIONS Fine tan sand, 25% platy cobble gravel (1")

MAJOR DIVISIONS: ☐ OH ☐ CH ☐ MH ☐ OH ☐ CL ☐ ML ☐ SC
☐ SM ☒ SP ☐ SW ☐ GC ☐ GM ☐ GP ☐ GW

QUALIFIERS: ☒ TRACE ☐ MINOR ☐ SOME; SAND SIZE ☐ FINE ☐ MEDIUM ☐ COARSE

MOISTURE: ☒ DRY ☐ MOIST ☐ WET

SAMPLE CONTAINERS (NUMBER AND TYPE) 2 ziplocks

ANALYSES: Ra-226, Metals

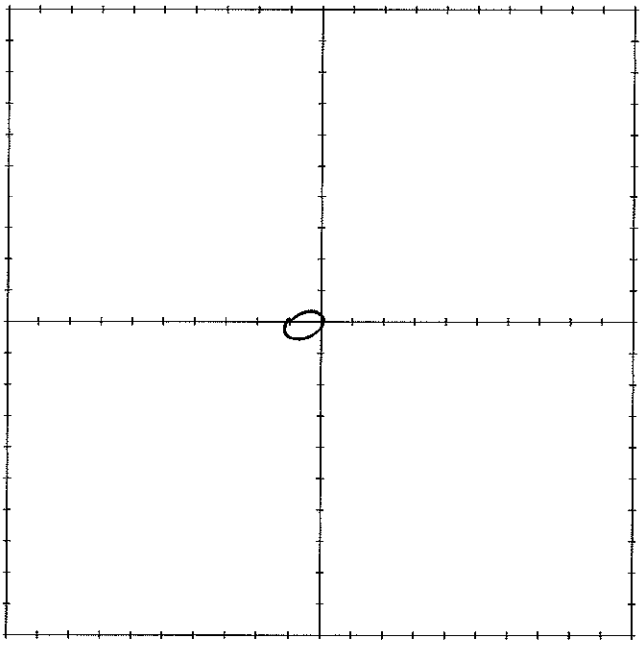

MARK INDIVIDUAL GRAB SAMPLE LOCATIONS IN GRID

MWH

SURFACE SOIL SAMPLE LOG FORM

AREA #/NAME S220 - UX-002

SAMPLE I.D. S220-UX-002

SAMPLE COLLECTION DATE 4/15/17

SAMPLE COLLECTION TIME 1420

SAMPLE COLLECTED BY HW/LK

WEATHER CONDITIONS 70°, sunny

FIELD USCS DESCRIPTIONS Fine tan / light brown sand

MAJOR DIVISIONS: ☐ OH ☐ CH ☐ MH ☐ OH ☐ CL ☐ ML ☐ SC
☐ SM ☒ SP ☐ SW ☐ GC ☐ GM ☐ GP ☐ GW

QUALIFIERS: ☐ TRACE ☐ MINOR ☐ SOME; SAND SIZE ☐ FINE ☐ MEDIUM ☐ COARSE

MOISTURE: ☒ DRY ☐ MOIST ☐ WET

SAMPLE CONTAINERS (NUMBER AND TYPE) 2 jars

ANALYSES: Ra-226, Metals

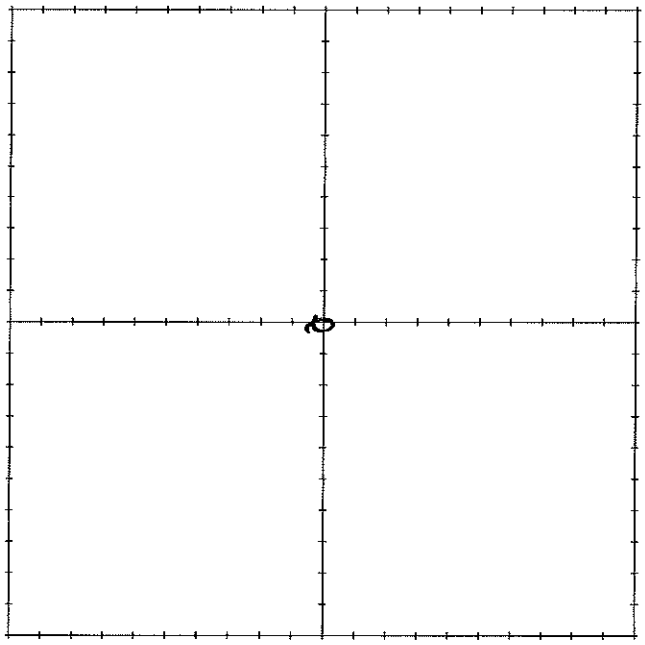

MARK INDIVIDUAL GRAB SAMPLE LOCATIONS IN GRID

MWH

SURFACE SOIL SAMPLE LOG FORM

AREA #/NAME: 5220-CX-003, 203

SAMPLE I.D.: 5220-CX-003

SAMPLE COLLECTION DATE: 4/15/17

SAMPLE COLLECTION TIME: 1435

SAMPLE COLLECTED BY: HW/LR

WEATHER CONDITIONS: 70's Sunny

FIELD USCS DESCRIPTIONS: Fine tan/red sand, < 5% (½"-1") subangular gravel, trace coarse sand

MAJOR DIVISIONS: ☐ OH ☐ CH ☐ MH ☐ OH ☐ CL ☐ ML ☐ SC
☐ SM ☒ SP ☐ SW ☐ GC ☐ GM ☐ GP ☐ GW

QUALIFIERS: ☐ TRACE ☐ MINOR ☐ SOME; SAND SIZE ☐ FINE ☐ MEDIUM ☐ COARSE

MOISTURE: ☒ DRY ☐ MOIST ☐ WET

SAMPLE CONTAINERS (NUMBER AND TYPE): 2 ziplock

ANALYSES: Ra-226, Metals

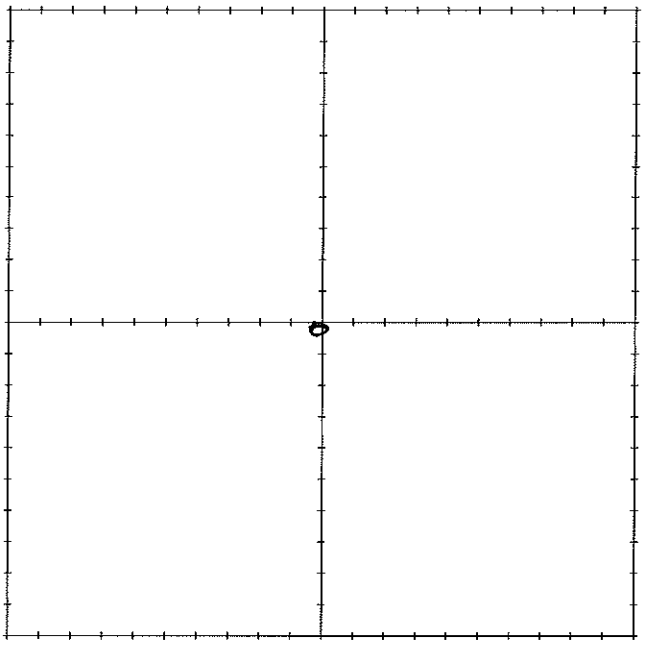

MARK INDIVIDUAL GRAB SAMPLE LOCATIONS IN GRID

MWH

SURFACE SOIL SAMPLE LOG FORM

AREA #/NAME 5220-CX-004

SAMPLE I.D. 5220-CX-004

SAMPLE COLLECTION DATE 4/15/17

SAMPLE COLLECTION TIME 1445

SAMPLE COLLECTED BY HW/LE

WEATHER CONDITIONS 70's, sunny

FIELD USCS DESCRIPTIONS Fine light brown sand, trace gravels

MAJOR DIVISIONS: ☐ OH ☐ CH ☐ MH ☐ OH ☐ CL ☐ ML ☐ SC
☐ SM ☒ SP ☐ SW ☐ GC ☐ GM ☐ GP ☐ GW

QUALIFIERS: ☒ TRACE ☐ MINOR ☐ SOME; SAND SIZE ☐ FINE ☐ MEDIUM ☐ COARSE

MOISTURE: ☒ DRY ☐ MOIST ☐ WET

SAMPLE CONTAINERS (NUMBER AND TYPE) 2 zipLoc

ANALYSES: Ra-226, Metals

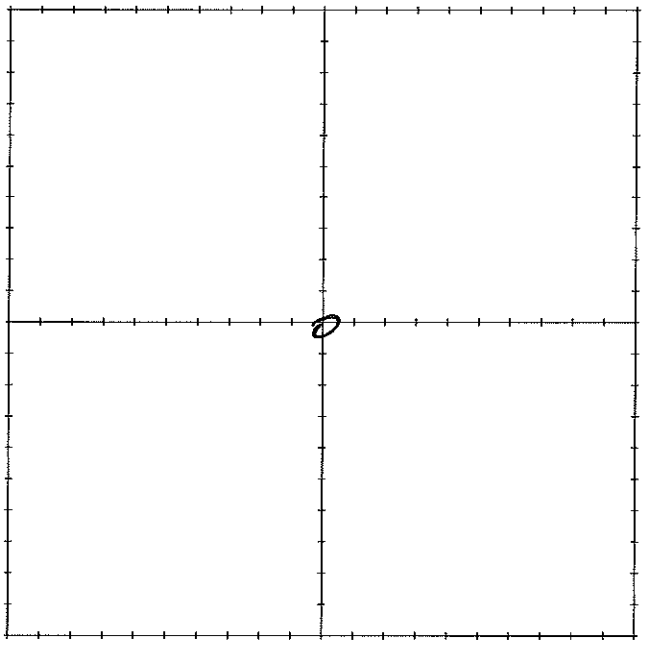

MARK INDIVIDUAL GRAB SAMPLE LOCATIONS IN GRID

MWH

SURFACE SOIL SAMPLE LOG FORM

AREA #/NAME S220-CX-005

SAMPLE I.D. S220-CX-005

SAMPLE COLLECTION DATE 4/15/17

SAMPLE COLLECTION TIME 1452

SAMPLE COLLECTED BY NW/LR

WEATHER CONDITIONS 70's, sunny

FIELD USCS DESCRIPTIONS Fine-tan/red sand

MAJOR DIVISIONS: ☐ OH ☐ CH ☐ MH ☐ OH ☐ CL ☐ ML ☐ SC
☐ SM ☒ SP ☐ SW ☐ GC ☐ GM ☐ GP ☐ GW

QUALIFIERS: ☐ TRACE ☐ MINOR ☐ SOME; SAND SIZE ☐ FINE ☐ MEDIUM ☐ COARSE

MOISTURE: ☒ DRY ☐ MOIST ☐ WET

SAMPLE CONTAINERS (NUMBER AND TYPE) 2 ziplock

ANALYSES: Ra226, Metals

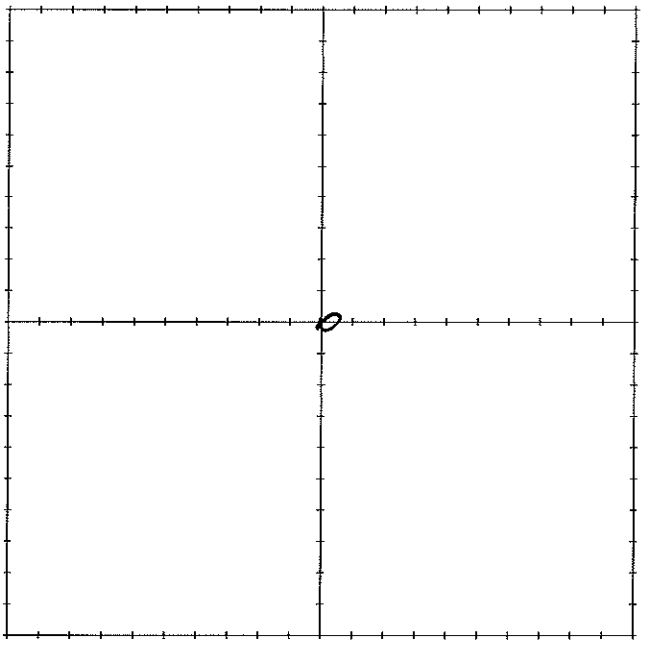

MARK INDIVIDUAL GRAB SAMPLE LOCATIONS IN GRID

MWH

SURFACE SOIL SAMPLE LOG FORM

AREA #/NAME S220-CX-006 MS/MSD

SAMPLE I.D. S220-CX-006

SAMPLE COLLECTION DATE 4/15/17

SAMPLE COLLECTION TIME 1504

SAMPLE COLLECTED BY HW/LK

WEATHER CONDITIONS 70's, sunny

FIELD USCS DESCRIPTIONS Fine light brown sand, poorly graded

MAJOR DIVISIONS: ☐ OH ☐ CH ☐ MH ☐ OH ☐ CL ☐ ML ☐ SC
☐ SM ☒ SP ☐ SW ☐ GC ☐ GM ☐ GP ☐ GW

QUALIFIERS: ☐ TRACE ☐ MINOR ☐ SOME; SAND SIZE ☐ FINE ☐ MEDIUM ☐ COARSE

MOISTURE: ☒ DRY ☐ MOIST ☐ WET

SAMPLE CONTAINERS (NUMBER AND TYPE) 2 ziplock

ANALYSES: Ra-226, Metals

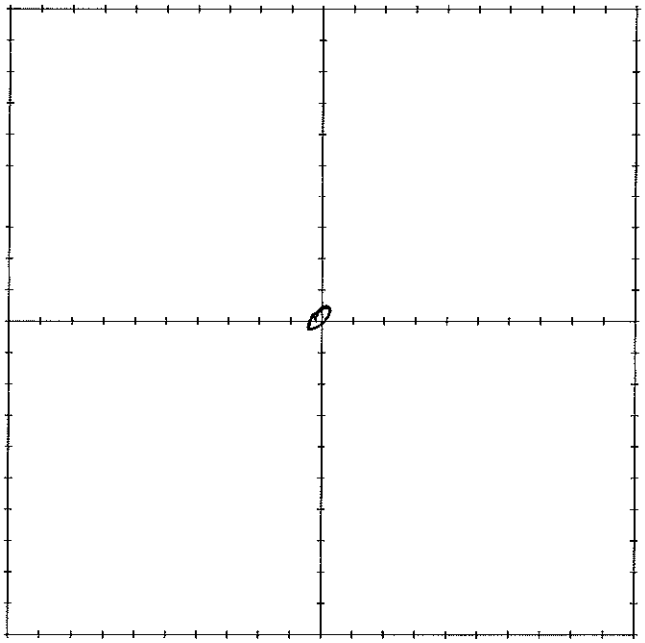

MARK INDIVIDUAL GRAB SAMPLE LOCATIONS IN GRID

MWH

SURFACE SOIL SAMPLE LOG FORM

AREA #/NAME: 5220 - CX-007

SAMPLE I.D.: 5220 - CX-007

SAMPLE COLLECTION DATE: 4/15/17

SAMPLE COLLECTION TIME: 1518

SAMPLE COLLECTED BY: HW / LR

WEATHER CONDITIONS: 70's, sunny

FIELD USCS DESCRIPTIONS: light brown fine sand, trace 1/2"-1" gravel

MAJOR DIVISIONS: ☐ OH ☐ CH ☐ MH ☐ OH ☐ CL ☐ ML ☐ SC
☐ SM ☒ SP ☐ SW ☐ GC ☐ GM ☐ GP ☐ GW

QUALIFIERS: ☒ TRACE ☐ MINOR ☐ SOME; SAND SIZE ☐ FINE ☐ MEDIUM ☐ COARSE

MOISTURE: ☒ DRY ☐ MOIST ☐ WET

SAMPLE CONTAINERS (NUMBER AND TYPE): 2 ziplock

ANALYSES: Ra-226, Metals

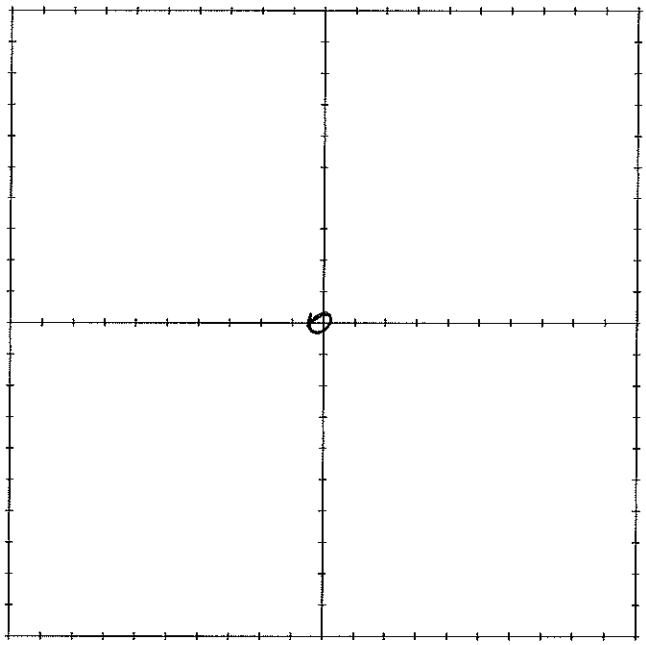

MARK INDIVIDUAL GRAB SAMPLE LOCATIONS IN GRID

MWH

SURFACE SOIL SAMPLE LOG FORM

AREA #/NAME: 5220 - UX-008

SAMPLE I.D.: 5220-UX-008

SAMPLE COLLECTION DATE: 4/15/17

SAMPLE COLLECTION TIME: 1532

SAMPLE COLLECTED BY: HW / KR

WEATHER CONDITIONS: 20's, sunny

FIELD USCS DESCRIPTIONS: Fine tan sand, some gravels, very rock dense (6"-1')

MAJOR DIVISIONS: ☐ OH ☐ CH ☐ MH ☐ OH ☐ CL ☐ ML ☐ SC
☐ SM ☒ SP ☐ SW ☐ GC ☐ GM ☒ GP ☐ GW

QUALIFIERS: ☐ TRACE ☐ MINOR ☐ SOME; SAND SIZE ☐ FINE ☐ MEDIUM ☐ COARSE

MOISTURE: ☒ DRY ☐ MOIST ☐ WET

SAMPLE CONTAINERS (NUMBER AND TYPE): 2 ziplock

ANALYSES: Ra-226, Metals

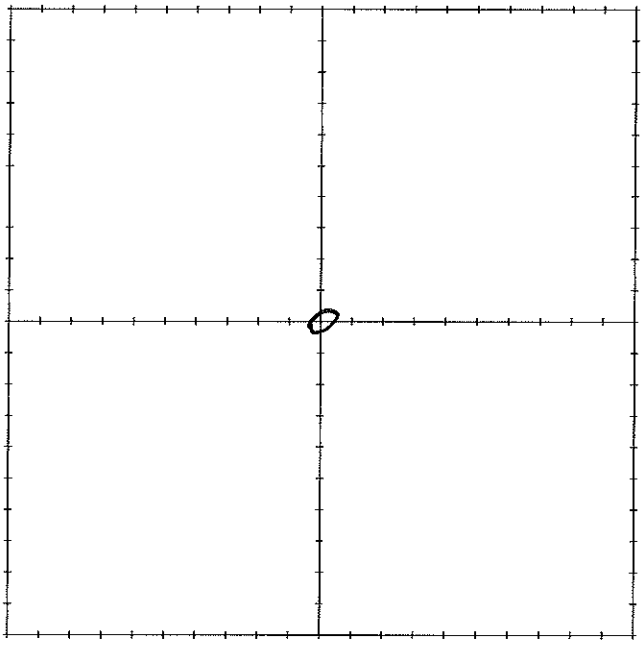

MARK INDIVIDUAL GRAB SAMPLE LOCATIONS IN GRID

MWH

SURFACE SOIL SAMPLE LOG FORM

AREA #/NAME S220-CX-009

SAMPLE I.D. S220-CX-009

SAMPLE COLLECTION DATE 4/15/17

SAMPLE COLLECTION TIME 1603

SAMPLE COLLECTED BY HW/LK

WEATHER CONDITIONS 70's, sunny

FIELD USCS DESCRIPTIONS Fine-tan sand, few gravels / sand, coarse sand w/ fine gravels

MAJOR DIVISIONS: ☐ OH ☐ CH ☐ MH ☐ OH ☐ CL ☐ ML ☐ SC
☐ SM ☒ SP ☐ SW ☐ GC ☐ GM ☐ GP ☐ GW

QUALIFIERS: ☐ TRACE ☐ MINOR ☐ SOME; SAND SIZE ☐ FINE ☐ MEDIUM ☐ COARSE

MOISTURE: ☒ DRY ☐ MOIST ☐ WET

SAMPLE CONTAINERS (NUMBER AND TYPE) 2 ziplock

ANALYSES: Ra 226, Metals

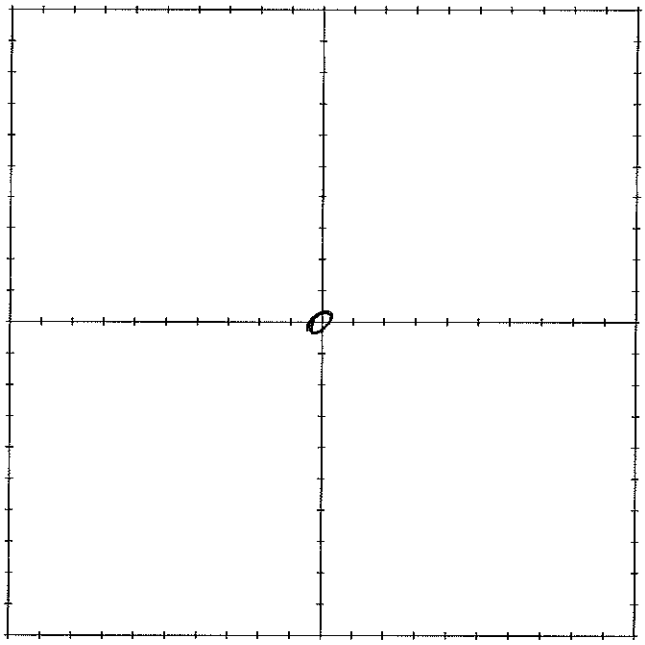

MARK INDIVIDUAL GRAB SAMPLE LOCATIONS IN GRID

MWH

SURFACE SOIL SAMPLE LOG FORM

AREA #/NAME S220 - CX - 010 Barton 3

SAMPLE I.D. S220 - CX - 010

SAMPLE COLLECTION DATE 4/17/17

SAMPLE COLLECTION TIME 1217

SAMPLE COLLECTED BY C. Lane

WEATHER CONDITIONS Sunny

FIELD USCS DESCRIPTIONS Poorly graded sand with trace gravel

MAJOR DIVISIONS: ☐ OH ☐ CH ☐ MH ☐ OH ☐ CL ☐ ML ☐ SC
☐ SM ☑ SP ☐ SW ☐ GC ☐ GM ☐ GP ☐ GW

QUALIFIERS: ☑ TRACE ☐ MINOR ☐ SOME; SAND SIZE ☑ FINE ☐ MEDIUM ☐ COARSE

MOISTURE: ☑ DRY ☐ MOIST ☐ WET

SAMPLE CONTAINERS (NUMBER AND TYPE) 2 Ziplocks

ANALYSES: Ra-226, Metals

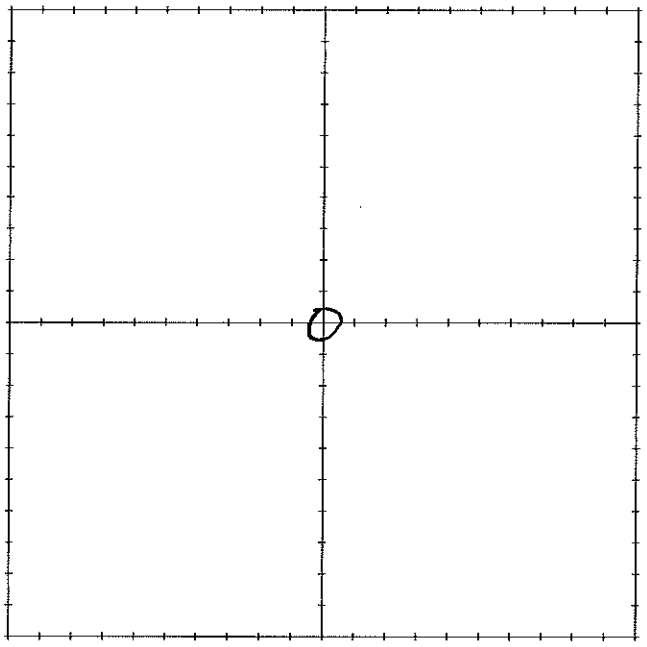

MARK INDIVIDUAL GRAB SAMPLE LOCATIONS IN GRID

MWH

C.2 Drilling and Hand Auger Borehole Logs

BOREHOLE ID:	**S220-SCX-002 (BG-1)**
CLIENT:	NNAUMERT
PROJECT:	Removal Site Evaluation
SITE LOCATION:	Barton 3

DRILLING CONTRACTOR:	Stantec	COORDINATE SYSTEM:	NAD 1983 UTM Zone 12N
DRILLING METHOD:	Hand auger	EASTING: 638574.32	NORTHING: 4089037.64
DRILLING EQUIPMENT:	Hand auger	DATE STARTED: 10/12/2016	DATE STARTED: 10/12/2016
SAMPLING METHOD:	Regular hand auger, 3 inch diameter	TOTAL DEPTH (ft.): 0.5	BOREHOLE ANGLE: 90 degrees
		LOGGED BY:	Luis Rodriguez

DEPTH (feet)	LITHOLOGICAL GRAPHIC	LITHOLOGICAL DESCRIPTION	Gamma (cpm) 0 25000 50000 75000 100000	SUBSURFACE SAMPLE INFORMATION: SAMPLE IDENTIFICATION	SAMPLE INTERVAL (ft bgl)	SAMPLE TYPE	LAB RESULTS RA-226 (pCi/g)
0		SILTY SAND (SM): with some trace gravel.	No downhole gamma data collected. Meter was not working.	S220-SCX-002-1	0-0.5	grab	2.11
		Terminated hand auger borehole at 0.5 ft. below ground surface. Refusal on bedrock.					
1							
2							
3							
4							
5							

Notes: cpm = counts per minute
pCi/g = picocuries per gram
grab = grab sample
comp = composite sample
- - - - = approximate contact

BOREHOLE ID:	**S220-SCX-001 (BG-2)**
CLIENT:	NNAUMERT
PROJECT:	Removal Site Evaluation
SITE LOCATION:	Barton 3

DRILLING CONTRACTOR:	Stantec	COORDINATE SYSTEM:	NAD 1983 UTM Zone 12N
DRILLING METHOD:	Hand auger	EASTING: 638272.65	NORTHING: 4089019.92
DRILLING EQUIPMENT:	Hand auger	DATE STARTED: 10/12/2016	DATE STARTED: 10/12/2016
SAMPLING METHOD:	Regular hand auger, 3 inch diameter	TOTAL DEPTH (ft.): 1.8	BOREHOLE ANGLE: 90 degrees
		LOGGED BY:	Luis Rodriguez

DEPTH (feet)	LITHOLOGICAL GRAPHIC	LITHOLOGICAL DESCRIPTION	Gamma (cpm)	SAMPLE IDENTIFICATION	SAMPLE INTERVAL (ft bgl)	SAMPLE TYPE	LAB RESULTS RA-226 (pCi/g)
0		SILTY SAND (SM):					
			7171	S220-SCX-001-1	0-0.5	grab	0.77
				S220-SCX-001-2	0.5-1.2	grab	0.59
1		slightly moist.	7270				
			7280	S220-SCX-001-3	1.2-1.8	grab	0.69
			7761				
2		Terminated hand auger borehole at 1.8 ft. below ground surface. Refusal on bedrock.					
3							
4							
5							

Gamma (cpm): 0, 25000, 50000, 75000, 100000

Notes: cpm = counts per minute
pCi/g = picocuries per gram
grab = grab sample
comp = composite sample
- - - - = approximate contact

BOREHOLE ID:	**S220-BG3-011**
CLIENT:	NNAUMERT
PROJECT:	Removal Site Evaluation
SITE LOCATION:	Barton 3

DRILLING CONTRACTOR:	Stantec	COORDINATE SYSTEM:	NAD 1983 UTM Zone 12N
DRILLING METHOD:	Hand auger	EASTING: 638338.24	NORTHING: 4089451.28
DRILLING EQUIPMENT:	Hand auger	DATE STARTED: 8/26/2017	DATE STARTED: 8/26/2017
SAMPLING METHOD:	Regular hand auger, 3 inch diameter	TOTAL DEPTH (ft.): 0.5	BOREHOLE ANGLE: 90 degrees
		LOGGED BY: Tom Osborn	

DEPTH (feet)	LITHOLOGICAL GRAPHIC	LITHOLOGICAL DESCRIPTION	Gamma (cpm) 0 25000 50000 75000 100000	SUBSURFACE SAMPLE INFORMATION: SAMPLE IDENTIFICATION	SAMPLE INTERVAL (ft bgl)	SAMPLE TYPE	LAB RESULTS RA-226 (pCi/g)
0		POORLY GRADED SAND (SP): fine sand 90% red, dry loose, gravel 10% subangular white.	9313	S220-BG3-011	0-0.5	grab	1.48
		Terminated hand auger borehole at 0.5 ft. below ground surface. Refusal on rock.	11112				
1							
2							
3							
4							
5							

Notes: cpm = counts per minute
pCi/g = picocuries per gram
grab = grab sample
comp = composite sample
- - - - = approximate contact

BOREHOLE ID:	**S220-SCX-003**
CLIENT:	NNAUMERT
PROJECT:	Removal Site Evaluation
SITE LOCATION:	Barton 3

DRILLING CONTRACTOR:	Stantec	COORDINATE SYSTEM:	NAD 1983 UTM Zone 12N
DRILLING METHOD:	Hand auger	EASTING: 638371.48	NORTHING: 4089266.49
DRILLING EQUIPMENT:	Hand auger	DATE STARTED: 4/15/2017	DATE STARTED: 4/15/2017
SAMPLING METHOD:	Regular hand auger, 3 inch diameter	TOTAL DEPTH (ft.): 1.25	BOREHOLE ANGLE: 90 degrees
		LOGGED BY:	Tom Osborn

DEPTH (feet)	LITHOLOGICAL GRAPHIC	LITHOLOGICAL DESCRIPTION	Gamma (cpm) 0 25000 50000 75000 100000	SUBSURFACE SAMPLE INFORMATION: SAMPLE IDENTIFICATION	SAMPLE INTERVAL (ft bgl)	SAMPLE TYPE	LAB RESULTS RA-226 (pCi/g)
0		POORLY GRADED SAND WITH SILT (SP): red, fine grained sands, moist.	14894				
				S220-SCX-003-01	0-0.5	grab	3.15
			17587				
				S220-SCX-003-02	0.5-1	grab	2.92
1				S220-SCX-003-03	1-1.25	grab	2.26
		Terminated hand auger borehole at 1.25 ft. below ground surface. Refusal on hard surface or rock.	12609				
2							
3							
4							
5							

Notes: cpm = counts per minute
pCi/g = picocuries per gram
grab = grab sample
comp = composite sample
- - - - = approximate contact

BOREHOLE ID:	**S220-SCX-004**
CLIENT:	NNAUMERT
PROJECT:	Removal Site Evaluation
SITE LOCATION:	Barton 3

DRILLING CONTRACTOR:	Stantec	COORDINATE SYSTEM:	NAD 1983 UTM Zone 12N
DRILLING METHOD:	Hand auger	EASTING: 638340.21	NORTHING: 4089272.96
DRILLING EQUIPMENT:	Hand auger	DATE STARTED: 4/15/2017	DATE STARTED: 4/15/2017
SAMPLING METHOD:	Regular hand auger, 3 inch diameter	TOTAL DEPTH (ft.): 0.5	BOREHOLE ANGLE: 90 degrees
		LOGGED BY: Tom Osborn	

DEPTH (feet)	LITHOLOGICAL GRAPHIC	LITHOLOGICAL DESCRIPTION	Gamma (cpm) 0 25000 50000 75000 100000	SUBSURFACE SAMPLE INFORMATION: SAMPLE IDENTIFICATION	SAMPLE INTERVAL (ft bgl)	SAMPLE TYPE	LAB RESULTS RA-226 (pCi/g)
0		POORLY GRADED SAND (SP): tan, dry.	16949	S220-SCX-004-01 S220-SCX-204-01	0-0.5	grab	5.86 6.18
		Terminated hand auger borehole at 0.5 ft. below ground surface. Refusal on bedrock.	71103				
1							
2							
3							
4							
5							

Notes: cpm = counts per minute
pCi/g = picocuries per gram
grab = grab sample
comp = composite sample
- - - - = approximate contact

BOREHOLE ID:	**S220-SCX-005**
CLIENT:	NNAUMERT
PROJECT:	Removal Site Evaluation
SITE LOCATION:	Barton 3

DRILLING CONTRACTOR:	Stantec	COORDINATE SYSTEM:	NAD 1983 UTM Zone 12N
DRILLING METHOD:	Hand auger	EASTING: 638304.81	NORTHING: 4089276.96
DRILLING EQUIPMENT:	Hand auger	DATE STARTED: 4/15/2017	DATE STARTED: 4/15/2017
SAMPLING METHOD:	Regular hand auger, 3 inch diameter	TOTAL DEPTH (ft.): 0.75	BOREHOLE ANGLE: 90 degrees
		LOGGED BY: Tom Osborn	

DEPTH (feet)	LITHOLOGICAL GRAPHIC	LITHOLOGICAL DESCRIPTION	Gamma (cpm) 0 25000 50000 75000 100000	SUBSURFACE SAMPLE INFORMATION: SAMPLE IDENTIFICATION	SAMPLE INTERVAL (ft bgl)	SAMPLE TYPE	LAB RESULTS RA-226 (pCi/g)
0		POORLY GRADED SAND (SP): red and tan, fine grained, dry.	14880	S220-SCX-005-01	0-0.5	grab	4.62
			20644				
		Terminated hand auger borehole at 0.75 ft. below ground surface. Refusal on bedrock.	23434				
1							
2							
3							
4							
5							

Notes: cpm = counts per minute
pCi/g = picocuries per gram
grab = grab sample
comp = composite sample
- - - - = approximate contact

BOREHOLE ID:	**S220-SCX-006**
CLIENT:	NNAUMERT
PROJECT:	Removal Site Evaluation
SITE LOCATION:	Barton 3

DRILLING CONTRACTOR:	Stantec	COORDINATE SYSTEM:	NAD 1983 UTM Zone 12N
DRILLING METHOD:	Hand auger	EASTING: 638289.84	NORTHING: 4089271.58
DRILLING EQUIPMENT:	Hand auger	DATE STARTED: 4/15/2017	DATE STARTED: 4/15/2017
SAMPLING METHOD:	Regular hand auger, 3 inch diameter	TOTAL DEPTH (ft.): 2.5	BOREHOLE ANGLE: 90 degrees
		LOGGED BY: Tom Osborn	

DEPTH (feet)	LITHOLOGICAL GRAPHIC	LITHOLOGICAL DESCRIPTION	Gamma (cpm) 0 100000 200000 300000 400000	SUBSURFACE SAMPLE INFORMATION: SAMPLE IDENTIFICATION	SAMPLE INTERVAL (ft bgl)	SAMPLE TYPE	LAB RESULTS RA-226 (pCi/g)
0		POORLY GRADED SAND (SP): red, fine grained, trace gravel, dry.	15879	S220-SCX-006-01	0-0.5	grab	7.23
			28300				
1			36304				
			46199	S220-SCX-006-02	1.5-2	grab	3.13
2			76140	S220-SCX-006-03	2-2.5	grab	56.30
			166611				
		Terminated hand auger borehole at 2.5 ft. below ground surface. Refusal on bedrock.					
3							
4							
5							

Notes: cpm = counts per minute
pCi/g = picocuries per gram
grab = grab sample
comp = composite sample
- - - - = approximate contact

BOREHOLE ID:	**S220-SCX-007**
CLIENT:	NNAUMERT
PROJECT:	Removal Site Evaluation
SITE LOCATION:	Barton 3

DRILLING CONTRACTOR:	Stantec	COORDINATE SYSTEM:	NAD 1983 UTM Zone 12N
DRILLING METHOD:	Hand auger	EASTING: 638297.66	NORTHING: 4089207.64
DRILLING EQUIPMENT:	Hand auger	DATE STARTED: 4/17/2017	DATE STARTED: 4/17/2017
SAMPLING METHOD:	Regular hand auger, 3 inch diameter	TOTAL DEPTH (ft.): 0.75	BOREHOLE ANGLE: 90 degrees
		LOGGED BY:	Tom Osborn

DEPTH (feet)	LITHOLOGICAL GRAPHIC	LITHOLOGICAL DESCRIPTION	Gamma (cpm)	SAMPLE IDENTIFICATION	SAMPLE INTERVAL (ft bgl)	SAMPLE TYPE	LAB RESULTS RA-226 (pCi/g)
0		SILTY SAND (SM): red, trace gravels.	6804				
			6359	S220-SCX-007-01	0-0.75	grab	1.04
			6296				
		Terminated hand auger borehole at 0.75 ft. below ground surface. Refusal on bedrock.					
1							
2							
3							
4							
5							

Gamma (cpm) scale: 0, 25000, 50000, 75000, 100000

Notes: cpm = counts per minute
pCi/g = picocuries per gram
grab = grab sample
comp = composite sample
- - - - = approximate contact

BOREHOLE ID:	**S220-SCX-008**
CLIENT:	NNAUMERT
PROJECT:	Removal Site Evaluation
SITE LOCATION:	Barton 3

DRILLING CONTRACTOR:	Cascade Drilling	COORDINATE SYSTEM:	NAD 1983 UTM Zone 12N
DRILLING METHOD:	Rotary Sonic	EASTING: 638255.56	NORTHING: 4089305.24
DRILLING EQUIPMENT:	Geoprobe 8140LC	DATE STARTED: 6/6/2017	DATE STARTED: 6/6/2017
SAMPLING METHOD:	Sonic Core Barrel, 4 inch diameter	TOTAL DEPTH (ft.): 4	BOREHOLE ANGLE: 90 degrees
		LOGGED BY:	Tom Osborn

DEPTH (feet)	LITHOLOGICAL GRAPHIC	LITHOLOGICAL DESCRIPTION	Gamma (cpm)	SAMPLE IDENTIFICATION	SAMPLE INTERVAL (ft bgl)	SAMPLE TYPE	LAB RESULTS RA-226 (pCi/g)
0		POORLY GRADED SAND (SP): red (5YR 5/6), loose, dry, fine sands 95%, trace gravel 5%.	9406	S220-SCX-008-001	0-0.5	grab	2.06
1			13940	S220-SCX-008-002 S220-SCX-008-202	0.5-1.5	grab	1.50 1.33
		SANDSTONE: Buff weathered, fine to coarse sandstone with trace sub-rounded gravels in the matrix.					
2			20440				
3			26742				
4		Terminated borehole at 4 ft. below ground surface in bedrock.					
5							

Gamma (cpm): 0, 25000, 50000, 75000, 100000

Notes: cpm = counts per minute
pCi/g = picocuries per gram
grab = grab sample
comp = composite sample
- - - - = approximate contact

BOREHOLE ID:	**S220-SCX-009**
CLIENT:	NNAUMERT
PROJECT:	Removal Site Evaluation
SITE LOCATION:	Barton 3

DRILLING CONTRACTOR:	Cascade Drilling	COORDINATE SYSTEM:	NAD 1983 UTM Zone 12N
DRILLING METHOD:	Rotary Sonic	EASTING: 638294.14	NORTHING: 4089308.78
DRILLING EQUIPMENT:	Geoprobe 8140LC	DATE STARTED: 6/6/2017	DATE STARTED: 6/6/2017
SAMPLING METHOD:	Sonic Core Barrel, 4 inch diameter	TOTAL DEPTH (ft.): 3	BOREHOLE ANGLE: 90 degrees
		LOGGED BY:	Tom Osborn

DEPTH (feet)	LITHOLOGICAL GRAPHIC	LITHOLOGICAL DESCRIPTION	Gamma (cpm) 0 25000 50000 75000 100000	SUBSURFACE SAMPLE INFORMATION: SAMPLE IDENTIFICATION	SAMPLE INTERVAL (ft bgl)	SAMPLE TYPE	LAB RESULTS RA-226 (pCi/g)
0		POORLY GRADED SAND (SP): red (5YR 5/6), loose, dry, fine sands 95%, trace gravel 5%.	17968	S220-SCX-009-001	0-0.5	grab	9.30
			28284				
1				S220-SCX-009-002	0.5-2	comp	11.90
			39114				
2		SANDSTONE: buff, weathered, fine grained sand matrix.					
			32948				
3		Terminated borehole at 3 ft. below ground surface in bedrock.					
4							
5							

Notes: cpm = counts per minute
pCi/g = picocuries per gram
grab = grab sample
comp = composite sample
- - - - = approximate contact

BOREHOLE ID:	**S220-SCX-010**
CLIENT:	NNAUMERT
PROJECT:	Removal Site Evaluation
SITE LOCATION:	Barton 3

DRILLING CONTRACTOR:	Cascade Drilling	COORDINATE SYSTEM:	NAD 1983 UTM Zone 12N
DRILLING METHOD:	Rotary Sonic	EASTING: 638278.35	NORTHING: 4089341.1
DRILLING EQUIPMENT:	Geoprobe 8140LC	DATE STARTED: 6/7/2017	DATE STARTED: 6/7/2017
SAMPLING METHOD:	Sonic Core Barrel, 4 inch diameter	TOTAL DEPTH (ft.): 4	BOREHOLE ANGLE: 90 degrees
		LOGGED BY:	Tom Osborn

DEPTH (feet)	LITHOLOGICAL GRAPHIC	LITHOLOGICAL DESCRIPTION	Gamma (cpm)	SUBSURFACE SAMPLE INFORMATION: SAMPLE IDENTIFICATION	SAMPLE INTERVAL (ft bgl)	SAMPLE TYPE	LAB RESULTS RA-226 (pCi/g)
0		POORLY GRADED SAND (SP): red (5YR 5/6), dry, fine sand.	18596	S220-SCX-010-001	0-0.5	grab	9.40
1			26314				
2			26722	S220-SCX-010-002	0.5-3.5	comp	5.04
3			22477				
		SANDSTONE: white, fine to medium grained sand matrix.					
4		Terminated borehole at 4 ft. below ground surface in bedrock.	18224				
5							

Gamma (cpm) scale: 0, 25000, 50000, 75000, 100000

Notes: cpm = counts per minute
pCi/g = picocuries per gram
grab = grab sample
comp = composite sample
- - - - = approximate contact

BOREHOLE ID:	**S220-SCX-011**
CLIENT:	NNAUMERT
PROJECT:	Removal Site Evaluation
SITE LOCATION:	Barton 3

DRILLING CONTRACTOR:	Cascade Drilling	COORDINATE SYSTEM:	NAD 1983 UTM Zone 12N
DRILLING METHOD:	Rotary Sonic	EASTING: 638271.15	NORTHING: 4089363.86
DRILLING EQUIPMENT:	Geoprobe 8140LC	DATE STARTED: 6/7/2017	DATE STARTED: 6/7/2017
SAMPLING METHOD:	Sonic Core Barrel, 4 inch diameter	TOTAL DEPTH (ft.): 14	BOREHOLE ANGLE: 90 degrees
		LOGGED BY: Tom Osborn	

DEPTH (feet)	LITHOLOGICAL GRAPHIC	LITHOLOGICAL DESCRIPTION	Gamma (cpm)	SUBSURFACE SAMPLE INFORMATION: SAMPLE IDENTIFICATION	SAMPLE INTERVAL (ft bgl)	SAMPLE TYPE	LAB RESULTS RA-226 (pCi/g)
0		POORLY GRADED SAND (SP): red (5YR 5/6), dry, fine to medium grained sand 97% trace subangular gravels 3%, trace grass and organics.	11902	S220-SCX-011-001	0-0.5	grab	2.53
1		no organics.	20198				
2			23574				
3			24446				
4			21836				
5			19952				
6			18176	S220-SCX-011-002	0.5-12.5	comp	2.98
7		BOULDER: white, tan, with fine sand grains and subangular gravels matrix.	18902				
8		POORLY GRADED SAND (SP): red (5YR 5/6), dry, fine to medium grained sand, trace subangular gravel.	20456				
9			14588				
10		with minor coarse sand and gravel.	13946				
11			14982				
12			16014				
13		CONGLOMERATE: Bedrock, white, weathered, fine sand with subrounded gravels matrix.	16498				
14		Terminated borehole at 14 ft. below ground surface in bedrock.	15572				
15							

Notes: cpm = counts per minute
pCi/g = picocuries per gram
grab = grab sample
comp = composite sample
- - - - = approximate contact

BOREHOLE ID:	**S220-SCX-012**
CLIENT:	NNAUMERT
PROJECT:	Removal Site Evaluation
SITE LOCATION:	Barton 3

DRILLING CONTRACTOR:	Cascade Drilling	COORDINATE SYSTEM:	NAD 1983 UTM Zone 12N
DRILLING METHOD:	Rotary Sonic	EASTING: 638311.96	NORTHING: 4089342.53
DRILLING EQUIPMENT:	Geoprobe 8140LC	DATE STARTED: 6/7/2017	DATE STARTED: 6/7/2017
SAMPLING METHOD:	Sonic Core Barrel, 4 inch diameter	TOTAL DEPTH (ft.): 7	BOREHOLE ANGLE: 90 degrees
		LOGGED BY:	Tom Osborn

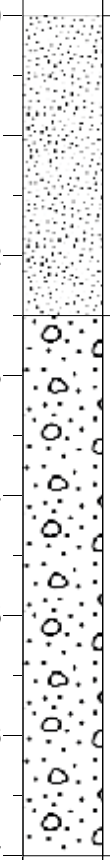

DEPTH (feet)	LITHOLOGICAL DESCRIPTION
0	POORLY GRADED SAND (SP): fine sand 90%, gravel 10%, with a few cobbles, subangular, cobbles are sandstone and petrified wood. Petrified wood has slightly elevated gamma.
2.5	CONGLOMERATE: Bedrock, white, fine to coarse sand and gravel matrix, gravels are subrounded.
7	Terminated borehole at 7 ft. below ground surface in bedrock.

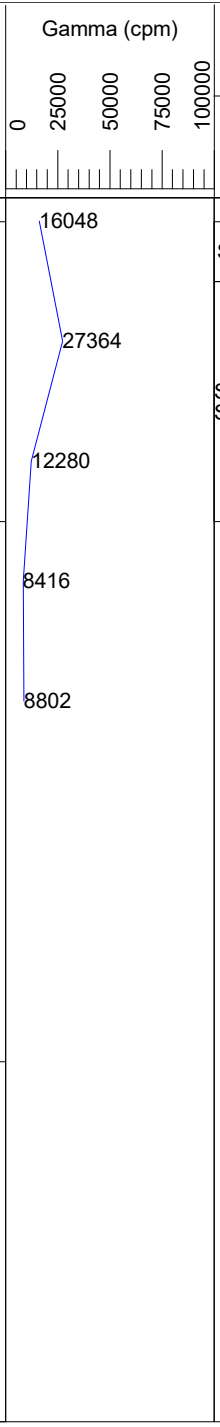

SUBSURFACE SAMPLE INFORMATION

SAMPLE IDENTIFICATION	SAMPLE INTERVAL (ft bgl)	SAMPLE TYPE	LAB RESULTS RA-226 (pCi/g)
S220-SCX-012-001	0-0.5	grab	7.08
S220-SCX-012-002 S220-SCX-012-202	0.5-2.5	comp	9.60 8.00

Notes: cpm = counts per minute
pCi/g = picocuries per gram
grab = grab sample
comp = composite sample
- - - - = approximate contact

BOREHOLE ID:	**S220-SCX-013**
CLIENT:	NNAUMERT
PROJECT:	Removal Site Evaluation
SITE LOCATION:	Barton 3

DRILLING CONTRACTOR:	Cascade Drilling	COORDINATE SYSTEM:	NAD 1983 UTM Zone 12N
DRILLING METHOD:	Rotary Sonic	EASTING: 638318.65	NORTHING: 4089293.28
DRILLING EQUIPMENT:	Geoprobe 8140LC	DATE STARTED: 6/7/2017	DATE STARTED: 6/7/2017
SAMPLING METHOD:	Sonic Core Barrel, 4 inch diameter	TOTAL DEPTH (ft.): 3	BOREHOLE ANGLE: 90 degrees
		LOGGED BY:	Tom Osborn

DEPTH (feet)	LITHOLOGICAL GRAPHIC	LITHOLOGICAL DESCRIPTION	Gamma (cpm) 0 200000 400000 600000	SUBSURFACE SAMPLE INFORMATION: SAMPLE IDENTIFICATION	SAMPLE INTERVAL (ft bgl)	SAMPLE TYPE	LAB RESULTS RA-226 (pCi/g)
0		POORLY GRADED SAND WITH GRAVEL (SP): red (7.5YR 6/6), fine to medium grained, angular to subangular gravel.	38730	S220-SCX-013-001	0-0.5	grab	26.50
1		light red (5YR 7/6), with woody debris, angular to rounded, gravels are shale, sandstone and petrified wood. Thin lenses, orange (10YR6/8).	161238	S220-SCX-013-002	0.8-1.8	grab	75.60
2		SANDSTONE: weathered, white, fine grained sandstone with subangular gravels matrix.	225896 318434				
3		Terminated borehole at 3 ft. below ground surface in bedrock.					
4							
5							

Notes: cpm = counts per minute
pCi/g = picocuries per gram
grab = grab sample
comp = composite sample
- - - - = approximate contact

BOREHOLE ID:	**S220-SCX-014**
CLIENT:	NNAUMERT
PROJECT:	Removal Site Evaluation
SITE LOCATION:	Barton 3

DRILLING CONTRACTOR:	Cascade Drilling	COORDINATE SYSTEM:	NAD 1983 UTM Zone 12N
DRILLING METHOD:	Rotary Sonic	EASTING: 638327.94	NORTHING: 4089292.9
DRILLING EQUIPMENT:	Geoprobe 8140LC	DATE STARTED: 6/7/2017	DATE STARTED: 6/7/2017
SAMPLING METHOD:	Sonic Core Barrel, 4 inch diameter	TOTAL DEPTH (ft.): 4	BOREHOLE ANGLE: 90 degrees
		LOGGED BY:	Tom Osborn

DEPTH (feet)	LITHOLOGICAL GRAPHIC	LITHOLOGICAL DESCRIPTION	Gamma (cpm) 0 100000 200000 300000 400000	SUBSURFACE SAMPLE INFORMATION: SAMPLE IDENTIFICATION	SAMPLE INTERVAL (ft bgl)	SAMPLE TYPE	LAB RESULTS RA-226 (pCi/g)
0		WELL GRADED SAND WITH GRAVEL (SW): red (5YR 5/5), fine to coarse sands, angular gravel.	31102	S220-SCX-014-001	0-0.5	grab	8.40
				S220-SCX-014-002	0.5-1	grab	10.00
1		SANDSTONE: white, fine to medium grained.	130520				
2		with interbedded shale, tan, orange and light green.	153278				
		white, fine to medium grained matrix.					
3			199862				
4		Terminated borehole at 4 ft. below ground surface in bedrock.	230440				
5							

Notes: cpm = counts per minute
pCi/g = picocuries per gram
grab = grab sample
comp = composite sample
- - - - = approximate contact

BOREHOLE ID:	**S220-SCX-015**
CLIENT:	NNAUMERT
PROJECT:	Removal Site Evaluation
SITE LOCATION:	Barton 3

DRILLING CONTRACTOR:	Cascade Drilling	COORDINATE SYSTEM:	NAD 1983 UTM Zone 12N
DRILLING METHOD:	Rotary Sonic	EASTING: 638356.12	NORTHING: 4089291.95
DRILLING EQUIPMENT:	Geoprobe 8140LC	DATE STARTED: 6/7/2017	DATE STARTED: 6/7/2017
SAMPLING METHOD:	Sonic Core Barrel, 4 inch diameter	TOTAL DEPTH (ft.): 5	BOREHOLE ANGLE: 90 degrees
		LOGGED BY:	Tom Osborn

DEPTH (feet)	LITHOLOGICAL GRAPHIC	LITHOLOGICAL DESCRIPTION	Gamma (cpm) 0 100000 200000 300000 400000	SUBSURFACE SAMPLE INFORMATION: SAMPLE IDENTIFICATION	SAMPLE INTERVAL (ft bgl)	SAMPLE TYPE	LAB RESULTS RA-226 (pCi/g)
0		POORLY GRADED SAND (SP): red (5YR 5/6), fine to medium grained, dry.	43334	S220-SCX-015-001	0-0.5	grab	11.80
				S220-SCX-015-002	0.5-1	grab	33.20
1		SANDSTONE: white, cobble, fine to medium grained sandstone.	168028				
		WELL GRADED SAND WITH GRAVEL (SW): orange, tan, (10YR 5/6), subrounded to subangular gravel.		S220-SCX-015-003	1.25-2	grab	78.40
2		SANDSTONE: white, fine to medium grained matrix.	258420				
3							
4		SHALE: orange, thin bedding thickness.					
		SANDSTONE: white, medium grained sand grains.					
5		Terminated borehole at 5 ft. below ground surface in bedrock.					

Notes: cpm = counts per minute
pCi/g = picocuries per gram
grab = grab sample
comp = composite sample
- - - - = approximate contact

BOREHOLE ID:	**S220-SCX-016**
CLIENT:	NNAUMERT
PROJECT:	Removal Site Evaluation
SITE LOCATION:	Barton 3

DRILLING CONTRACTOR:	Cascade Drilling	COORDINATE SYSTEM:	NAD 1983 UTM Zone 12N
DRILLING METHOD:	Rotary Sonic	EASTING: 638343.95	NORTHING: 4089291.98
DRILLING EQUIPMENT:	Geoprobe 8140LC	DATE STARTED: 6/7/2017	DATE STARTED: 6/7/2017
SAMPLING METHOD:	Sonic Core Barrel, 4 inch diameter	TOTAL DEPTH (ft.): 5	BOREHOLE ANGLE: 90 degrees
		LOGGED BY:	Tom Osborn

DEPTH (feet)	LITHOLOGICAL GRAPHIC	LITHOLOGICAL DESCRIPTION	Gamma (cpm) 0 250000 500000 750000 1000000	SUBSURFACE SAMPLE INFORMATION: SAMPLE IDENTIFICATION	SAMPLE INTERVAL (ft bgl)	SAMPLE TYPE	LAB RESULTS RA-226 (pCi/g)
0		POORLY GRADED SAND (SP): red (5YR 5/6), fine sand 100%.	20614	S220-SCX-016-001	0-0.5	grab	7.16
				S220-SCX-016-002	0.5-0.8	grab	8.20
1		BOULDER: composed of fine to coarse sand with subangular gravels matrix.	22848				
		SILTY SAND WITH GRAVEL (SM): orange and tan (7.5 YR 5/8), minor wood and roots, dry.		S220-SCX-016-003	1-2	grab	36.90
2			480338				
		SILTY SAND WITH GRAVEL (GM): orange, white and black (7.5YR 4/6), dry.		S220-SCX-016-004	2-3	grab	206.00
3		with sandstone cobbles, orange (7.5YR 5/8), dry.	581372				
		SANDSTONE: white, tan, fine to medium grained, dry, with very thin interbedded shale.					
4			136978				
			13362				
5		Terminated borehole at 5 ft. below ground surface in bedrock.					

Notes: cpm = counts per minute
pCi/g = picocuries per gram
grab = grab sample
comp = composite sample
- - - - = approximate contact

BOREHOLE ID:	**S220-SCX-017**
CLIENT:	NNAUMERT
PROJECT:	Removal Site Evaluation
SITE LOCATION:	Barton 3

DRILLING CONTRACTOR:	Cascade Drilling	COORDINATE SYSTEM:	NAD 1983 UTM Zone 12N
DRILLING METHOD:	Rotary Sonic	EASTING: 638392.48	NORTHING: 4089299.91
DRILLING EQUIPMENT:	Geoprobe 8140LC	DATE STARTED: 6/7/2017	DATE STARTED: 6/7/2017
SAMPLING METHOD:	Sonic Core Barrel, 4 inch diameter	TOTAL DEPTH (ft.): 12.5	BOREHOLE ANGLE: 90 degrees
		LOGGED BY: Tom Osborn	

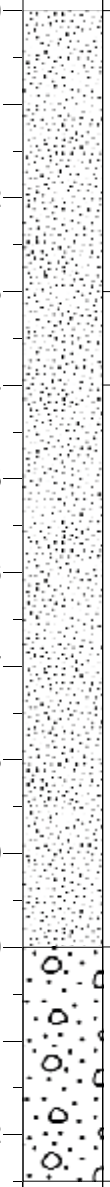

DEPTH (feet)	LITHOLOGICAL DESCRIPTION	Gamma (cpm)	SAMPLE IDENTIFICATION	SAMPLE INTERVAL (ft bgl)	SAMPLE TYPE	LAB RESULTS RA-226 (pCi/g)
0	POORLY GRADED SAND (SP): red (5YR 5/6), fine to medium grained sand, with trace gravels, dry, roots and organics.	18682	S220-SCX-017-001	0-0.5	grab	10.10
1		31938				
2		32882	S220-SCX-017-002 S220-SCX-017-202	0.5-4	comp	10.00 8.50
3	POORLY GRADED SAND WITH GRAVEL (SP): red (5YR 5/6), fine to medium grained sand, sand 80%, gravel 20%.	37316				
4	POORLY GRADED SAND (SP): red (5YR 5/8), fine grained sand, sand 100%.	36758				
5		17922				
6		13854	S220-SCX-017-003	4-9	comp	0.47
7		13512				
8		12964				
9		13392				
10	CONGLOMERATE: Bedrock, fine to coarse gravel matrix, subrounded to subangular gravels.	16250	S220-SCX-017-004	9-12	comp	1.67
11		19588				
12		19492				
13	Terminated borehole at 12.5 ft. below ground surface in bedrock.					

Notes: cpm = counts per minute
pCi/g = picocuries per gram
grab = grab sample
comp = composite sample
- - - - = approximate contact

BOREHOLE ID:	**S220-SCX-018**
CLIENT:	NNAUMERT
PROJECT:	Removal Site Evaluation
SITE LOCATION:	Barton 3

DRILLING CONTRACTOR:	Cascade Drilling	COORDINATE SYSTEM:	NAD 1983 UTM Zone 12N
DRILLING METHOD:	Rotary Sonic	EASTING: 638404.7	NORTHING: 4089276.01
DRILLING EQUIPMENT:	Geoprobe 8140LC	DATE STARTED: 6/7/2017	DATE STARTED: 6/7/2017
SAMPLING METHOD:	Sonic Core Barrel, 4 inch diameter	TOTAL DEPTH (ft.): 12.5	BOREHOLE ANGLE: 90 degrees
		LOGGED BY: Tom Osborn	

DEPTH (feet)	LITHOLOGICAL GRAPHIC	LITHOLOGICAL DESCRIPTION	Gamma (cpm)	SAMPLE IDENTIFICATION	SAMPLE INTERVAL (ft bgl)	SAMPLE TYPE	LAB RESULTS RA-226 (pCi/g)
0		POORLY GRADED SAND (SP): red (5YR 6/6), fine to medium grained sand, trace gravels.	11724	S220-SCX-018-001	0-0.5	grab	2.47
1			17520				
2			17662	S220-SCX-018-002	0.5-4	comp	2.00
3			15764				
4			16248				
5			16182	S220-SCX-018-003	4-7	comp	1.48
6			15202				
7		SANDSTONE: white, fine to medium grained matrix.	15462				
8			16396				
9			18954				
10			19624				
11			10354				
12			8950				
13		Terminated borehole at 12.5 ft. below ground surface in bedrock.					

Gamma (cpm) scale: 0, 25000, 50000, 75000, 100000

Notes: cpm = counts per minute
pCi/g = picocuries per gram
grab = grab sample
comp = composite sample
- - - - = approximate contact

BOREHOLE ID:	**S220-SCX-019**
CLIENT:	NNAUMERT
PROJECT:	Removal Site Evaluation
SITE LOCATION:	Barton 3

DRILLING CONTRACTOR:	Cascade Drilling	COORDINATE SYSTEM:	NAD 1983 UTM Zone 12N
DRILLING METHOD:	Rotary Sonic	EASTING: 638425.76	NORTHING: 4089303.11
DRILLING EQUIPMENT:	Geoprobe 8140LC	DATE STARTED: 6/8/2017	DATE STARTED: 6/8/2017
SAMPLING METHOD:	Sonic Core Barrel, 4 inch diameter	TOTAL DEPTH (ft.): 17	BOREHOLE ANGLE: 90 degrees
		LOGGED BY:	Tom Osborn

DEPTH (feet)	LITHOLOGICAL GRAPHIC	LITHOLOGICAL DESCRIPTION	Gamma (cpm)	SAMPLE IDENTIFICATION	SAMPLE INTERVAL (ft bgl)	SAMPLE TYPE	LAB RESULTS RA-226 (pCi/g)
0		POORLY GRADED SAND (SP): red (5YR 5/6), fine grained sand, dry, loose, trace gravels.	15514	S220-SCX-019-001	0-0.5	grab	6.73
1			26882				
2			19658				
3			13542				
4		trace coarse sand and gravel, moderately dense.	11262	S220-SCX-019-002	0.5-7.5	comp	2.05
5			11562				
6			12068				
7			12392				
8		dense.	12362				
9			12624	S220-SCX-019-003	7.5-11	comp	0.99
10		sand 100%.	12866				
11		sand 90%, gravel 10%.	15300				
12			21880				
13		with petrified wood and minor gravels. POORLY GRADED SAND (SP): red (5YR 5/6), fine to medium grained sand, trace coarse grained sand.	35580	S220-SCX-019-004	11-15.5	comp	4.15
14			17444				
15			11020				
16		CONGLOMERATE: Bedrock, white, tan and red, fine sand to cobble matrix, gravels are rounded, weathered, chert.	9028				
17		becoming hard. Terminated borehole at 17 ft. below ground surface in bedrock.	9504				
18							
19							
20							

Notes: cpm = counts per minute
pCi/g = picocuries per gram
grab = grab sample
comp = composite sample
- - - - = approximate contact

BOREHOLE ID:	**S220-SCX-020**
CLIENT:	NNAUMERT
PROJECT:	Removal Site Evaluation
SITE LOCATION:	Barton 3

DRILLING CONTRACTOR:	Cascade Drilling	COORDINATE SYSTEM:	NAD 1983 UTM Zone 12N
DRILLING METHOD:	Rotary Sonic	EASTING: 638393.81	NORTHING: 4089339.43
DRILLING EQUIPMENT:	Geoprobe 8140LC	DATE STARTED: 6/8/2017	DATE STARTED: 6/8/2017
SAMPLING METHOD:	Sonic Core Barrel, 4 inch diameter	TOTAL DEPTH (ft.): 4	BOREHOLE ANGLE: 90 degrees
		LOGGED BY:	Tom Osborn

DEPTH (feet)	LITHOLOGICAL GRAPHIC	LITHOLOGICAL DESCRIPTION	Gamma (cpm)	SUBSURFACE SAMPLE INFORMATION: SAMPLE IDENTIFICATION	SAMPLE INTERVAL (ft bgl)	SAMPLE TYPE	LAB RESULTS RA-226 (pCi/g)
0		POORLY GRADED SAND (SP): red (5YR 5/6), fine grained sand 100%, dry, loose, trace grass and roots.	13644	S220-SCX-020-001 S220-SCX-020-201	0-0.5	grab	4.58 4.18
1			25502	S220-SCX-020-002	0.5-2.5	comp	5.24
2		CONGLOMERATE: Bedrock, white, fine sand to cobble matrix.	24990				
3			18994				
4		Terminated borehole at 4 ft. below ground surface in bedrock.					
5							

Notes: cpm = counts per minute
pCi/g = picocuries per gram
grab = grab sample
comp = composite sample
- - - - = approximate contact

BOREHOLE ID:	**S220-SCX-021**
CLIENT:	NNAUMERT
PROJECT:	Removal Site Evaluation
SITE LOCATION:	Barton 3

DRILLING CONTRACTOR:	Cascade Drilling	COORDINATE SYSTEM:	NAD 1983 UTM Zone 12N
DRILLING METHOD:	Rotary Sonic	EASTING: 638381.34	NORTHING: 4089324.89
DRILLING EQUIPMENT:	Geoprobe 8140LC	DATE STARTED: 6/8/2017	DATE STARTED: 6/8/2017
SAMPLING METHOD:	Sonic Core Barrel, 4 inch diameter	TOTAL DEPTH (ft.): 3.5	BOREHOLE ANGLE: 90 degrees
		LOGGED BY:	Tom Osborn

DEPTH (feet)	LITHOLOGICAL GRAPHIC	LITHOLOGICAL DESCRIPTION	Gamma (cpm) 0 25000 50000 75000 100000	SUBSURFACE SAMPLE INFORMATION: SAMPLE IDENTIFICATION	SAMPLE INTERVAL (ft bgl)	SAMPLE TYPE	LAB RESULTS RA-226 (pCi/g)
0		POORLY GRADED SAND (SP): red (5YR 5/6), fine grained sand, trace grass and roots.	16076	S220-SCX-021-001	0-0.5	grab	4.32
1			30796	S220-SCX-021-002	0.5-2	comp	5.88
2		SANDSTONE: white, fine grained.	34790				
3			25620				
		Terminated borehole at 3.5 ft. below ground surface in bedrock.					
4							
5							

Notes: cpm = counts per minute
pCi/g = picocuries per gram
grab = grab sample
comp = composite sample
- - - - = approximate contact

BOREHOLE ID:	**S220-SCX-022**
CLIENT:	NNAUMERT
PROJECT:	Removal Site Evaluation
SITE LOCATION:	Barton 3

DRILLING CONTRACTOR:	Cascade Drilling	COORDINATE SYSTEM:	NAD 1983 UTM Zone 12N
DRILLING METHOD:	Rotary Sonic	EASTING: 638455.21	NORTHING: 4089303.19
DRILLING EQUIPMENT:	Geoprobe 8140LC	DATE STARTED: 6/8/2017	DATE STARTED: 6/8/2017
SAMPLING METHOD:	Sonic Core Barrel, 4 inch diameter	TOTAL DEPTH (ft.): 23	BOREHOLE ANGLE: 90 degrees
		LOGGED BY:	Tom Osborn

DEPTH (feet)	LITHOLOGICAL GRAPHIC	LITHOLOGICAL DESCRIPTION	Gamma (cpm)	SAMPLE IDENTIFICATION	SAMPLE INTERVAL (ft bgl)	SAMPLE TYPE	LAB RESULTS RA-226 (pCi/g)
0		POORLY GRADED SAND (SP): red (5YR 5/6), fine grained sand, trace medium grained sand, dry.	9048	S220-SCX-022-001	0-0.5	grab	1.21
1			13102				
2			16796				
3			17106				
4			17634				
5			19038				
6			21812				
7			22898	S220-SCX-022-002	5-10	comp	2.37
8			22638				
9			17232				
10		fine grained sand.	14420				
11			14314				
12			14300				
13			13840				
14		WELL GRADED SAND WITH GRAVEL (SW): light purple (7.5R 7/4), gravels are subrounded, dry, fluvial.	127004				
15			10696				
16		POORLY GRADED SAND (SP): red (5YR 5/6), fine sand, dry.	11070				
17			13038				
18		WELL GRADED SAND WITH GRAVEL (SW): gravels are subrounded, dry, fluvial.	14196				
19		POORLY GRADED SAND (SP): red (5YR 5/6), fine sand, dry.	15578	S220-SCX-022-003	19-20	grab	0.72
20		POORLY GRADED SAND WITH GRAVEL (SP): sand 75%, gravel 25%, gravels are subangular, dry.	19814				
21		SANDSTONE: white, tan.	24070				
22		SHALE: red, and sandstone.	17590				
23		SANDSTONE: red, fine grained matrix, thin green discontinuous lenses of silt.					
24		Terminated borehole at 23 ft. below ground surface in bedrock.					
25							

Notes: cpm = counts per minute
pCi/g = picocuries per gram
grab = grab sample
comp = composite sample
- - - - = approximate contact

BOREHOLE ID:	**S220-SCX-023**
CLIENT:	NNAUMERT
PROJECT:	Removal Site Evaluation
SITE LOCATION:	Barton 3

DRILLING CONTRACTOR:	Cascade Drilling	COORDINATE SYSTEM:	NAD 1983 UTM Zone 12N
DRILLING METHOD:	Rotary Sonic	EASTING: 466692.81	NORTHING: 3968852.04
DRILLING EQUIPMENT:	Geoprobe 8140LC	DATE STARTED: 6/6/2017	DATE STARTED: 6/6/2017
SAMPLING METHOD:	Sonic Core Barrel, 4 inch diameter	TOTAL DEPTH (ft.): 7.5	BOREHOLE ANGLE: 90 degrees
		LOGGED BY:	Tom Osborn

DEPTH (feet)	LITHOLOGICAL GRAPHIC	LITHOLOGICAL DESCRIPTION	Gamma (cpm) 0 25000 50000 75000 100000	SUBSURFACE SAMPLE INFORMATION: SAMPLE IDENTIFICATION	SAMPLE INTERVAL (ft bgl)	SAMPLE TYPE	LAB RESULTS RA-226 (pCi/g)
0		POORLY GRADED SAND (SP): red (5YR 5/6), fine sand, dry loose.	9082	S220-SCX-023-001	0-0.5	grab	1.59
1			12848	S220-SCX-023-002	0.5-2	comp	1.66
2		SANDSTONE: fine to medium grained matrix with lenses of coarse grained sand matrix.	13190				
3			11336				
4			10852				
5			10406				
6			10568				
7			11358				
		Terminated borehole at 7.5 ft. below ground surface in bedrock.					
8							
9							
10							

Notes: cpm = counts per minute
pCi/g = picocuries per gram
grab = grab sample
comp = composite sample
- - - - = approximate contact

Appendix D Evaluation of RSE Data

D.1 Background Reference Area Selection

D.2 Statistical Evaluation

BACKGROUND REFERENCE AREA SELECTION

1.0 INTRODUCTION

This appendix presents the rationale for selection of the background reference areas for the Barton 3 Site (Site). To select the background reference areas for the Site, personnel considered geology, predominant wind direction, distance from the Site, hydrologic influence, similarities of vegetation and ground cover, and visual evidence of impacts due to mining (or other anthropogenic sources) in accordance with the *Multi-Agency Radiation Survey and Site Investigation Manual – Appendix A* ([MARSSIM] USEPA, 2000).

2.0 POTENTIAL BACKGROUND REFERENCE AREAS

The potential background reference area study was initiated during the Site Clearance desktop study and field investigations. Two potential background reference areas (BG-1 and BG-2) were identified during the Site Clearance to represent the Salt Wash Member of the Morrison Formation (Morrison Formation) at the Site (see Figure D.1-1). The surface gamma surveys at BG-1 and BG-2 were conducted in April 2016 and the soil sampling was conducted in October 2016. Following review of data collected at BG-1, BG-2 and the Site, it was determined that additional samples were needed to characterize BG-1 and an additional potential background reference area may be required to characterize the soil and sediments within the Summerville Formation, which occurs north of the Site where mining-related earthworks are present (see Figure D.1-1). Additional soil samples were collected because the areal extent of the initial samples did not cover the areal extent of the gamma survey due to field personnel oversight. Green sands were also observed in the area of BG-1 and the additional samples were collected to provide better coverage of that area of the background reference area. The additional samples were collected at BG-1 in March 2017. Three additional potential background reference areas (BG-3, BG-4, and BG-5) were identified to represent the Summerville Formation and surface gamma surveys were conducted in June 2017; BG-3 was also within Quaternary deposits. Multiple areas were surveyed (BG-3, BG-4 and BG-5) because the gamma survey data could not be reviewed in the field in real-time and needed to be downloaded from the data logger first. The field team reviewed the data from the different areas after completion of the surveys to select the most representative area. BG-3 was selected over BG-4 and BG-5 as described in Section 3.0 below, and soil samples were collected from BG-3 in August 2017. During further review of the Baseline Studies data, it was determined that BG-2, BG-4, and BG-5 would not be used to represent the Site, as described in Section 3.0 below.

The locations of the five potential background reference areas (BG-1, BG-2, BG-3, BG-4, and BG-5) are shown along with the Site geology and predominant wind direction in Figure D.1-1. The wind rose in Figure D.1-1 depicts regional wind data from the Cortez, CO airport,

approximately 50 miles northeast of the Site, and it shows that the predominant wind direction from the northeast. However, field personnel generally observed wind from the west when at the Site, and the Site sits in a valley that runs west to east as well. The potential background reference areas are described below.

- BG-1 encompasses an area of 2,093 ft^2 (approximately 0.05 acres), is located 1,020 ft southeast of the claim boundary, and is cross-wind and hydrologically cross-gradient from the Site. The thin soils and bedrock outcrops represent the majority of the Site within the claim boundary and 100 ft buffer, and are the same geologic unit, the Morrison Formation. Areas of BG-1 have weathered sandstone fragments and green sands at the surface which contain elevated naturally occurring radioactive material (NORM.) The vegetation and ground cover at BG-1 are similar to the majority of the Site.

- BG-2 encompasses an area of 2,031 ft^2 (approximately 0.05 acres), is located 630 ft south of the claim boundary, and is cross-wind and hydrologically upgradient from the Site. The thin soils and bedrock outcrops represent the majority of the Site within the claim boundary and 100 ft buffer, and are the same geologic unit, the Morrison Formation. The vegetation and ground cover at BG-2 are similar to the majority of the Site.

- BG-3 encompasses an area of 4,710 ft^2 (approximately 0.11 acres), is located 540 ft north of the claim boundary, and is cross-wind from the Site. Regionally, BG-3 is hydrologically downgradient from the Site but is locally topographically elevated and does not receive Site runoff. The thin soils and bedrock outcrops represent both the Summerville Formation and Quaternary deposits. The vegetation and ground cover at BG-3 are similar to the northern areas of the Site near the Earthworks.

- BG-4 encompasses an area of 3,406 ft^2 (approximately 0.08 acres), is located 390 ft northwest of the claim boundary, and is cross-wind from the Site. Regionally, BG-4 is hydrologically downgradient from the Site but the ground surface is generally flat between the Site and the BG-4, and field personnel observed that the minor drainages from the Site terminated well before reaching the area of BG-4. The thin soils represent the Summerville Formation. The vegetation and ground cover at BG-4 are similar to the northern areas of the Site near the Earthworks.

- BG-5 encompasses an area of 9,539 ft^2 (approximately 0.22 acres), is located 260 ft northwest of the claim boundary, and is cross-wind from the Site. Regionally, BG-5 is hydrologically down-gradient from the Site but the ground surface is generally flat between the Site and the BG-5, and field personnel observed that the minor drainages from the Site terminated well before reaching the area of BG-5. The thin soils represent the Summerville Formation. The vegetation and ground cover at BG-5 are similar to the northern areas of the Site near the Earthworks.

The potential background reference area evaluation included surface gamma surveys, surface and subsurface static gamma measurements, and collection of surface soil samples and subsurface soil samples as described below.

- BG-1 - 16 surface soil grab samples were collected from 16 locations; a borehole could not be advanced beyond 0.5 ft at S260-SCX-002 due to refusal on bedrock, so no subsurface

samples were collected at BG-1; surface and/or subsurface static gamma measurements were not collected in the attempted borehole due to a gamma meter malfunction

- BG-2 - 11 surface soil grab samples were collected from 11 locations; two subsurface soil grab samples and subsurface static gamma measurements were collected from borehole location S002-SCX-001
- BG-3 - 11 surface soil grab samples were collected from 11 locations; a borehole could not be advanced beyond 0.5 ft at S260-BG3-011 due to refusal on bedrock, so no subsurface samples were collected at BG-3; surface and subsurface static gamma measurements were collected from borehole location S220-BG3-011

The sample locations for BG-1, BG-2, and BG-3, and the surface gamma survey data for BG-1, BG-2, BG-3, BG-4 and BG-5, are shown in Figure D.1-2. Samples were categorized as surface soil or sediment samples where sample depths were up to 0.5 ft below ground surface (bgs), and as subsurface soil or sediment samples where sample depths were greater than 0.5 ft bgs. Static gamma measurements were categorized as subsurface gamma measurements where static gamma was measured at or greater than 0.1 ft bgs. Table 4-1 in the RSE Report provides the results of the sample analyses, and Tables D.1-1 and D.1-2 provide descriptive statistics for all metals/Ra-226 concentrations and the surface gamma measurements, respectively. Field forms, including borehole logs, are included in Appendix C of the RSE Report.

The equipment used for the surface gamma surveys were also used for static one-minute gamma measurements at the ground surface and for subsurface measurements at borehole locations. Soil samples and gamma measurements were collected according to the methods described in the *Removal Site Evaluation Work Plan* (MWH, 2016).

3.0 SELECTION OF BACKGROUND REFERENCE AREA

Background reference areas were selected to represent the formations present at or near the Site where mining-related disturbances may have occurred: BG-1 and BG-2 are representative of the Morrison Formation, BG-3 is representative of the Summerville Formation and Quaternary deposits, and BG-4 and BG-5 are representative of the Summerville Formation. BG-1 was selected over BG-2 to represent the areas of the Site within the Morrison Formation (i.e., outcrops and thin soil cover within the 100 ft buffer where mining-related disturbance at the Site occurred). BG-2 better represented the southern portion of the claim area where little to no disturbance occurred, and where there was more soil cover. However, BG-2 does provide a valuable comparison to BG-1 regarding the variation in gamma measurements that may occur in background areas and the heterogeneity that is present within the Morrison Formation. As a result, BG-2 is included in the RSE Report for discussion purposes. It is also noted in the RSE report that because of the disparity in UTL values between BG-1 and BG-2, and also due to the potential heterogeneity observed in BG-1 (i.e., green sands), additional study to develop a representative background reference area for the Morrison Formation may be warranted. BG-4 and BG-5 were not selected as background reference areas because they are too close

to disturbed areas of the Site and it was observed that a historical road passed through the area of BG-5. BG-3 was selected over BG-4 and BG-5 because it was located further from the mining- and reclamation-disturbed areas of the Site and represents both the Summerville Formation and thin Quaternary deposits overlying the Summerville Formation. Gamma survey measurements, subsurface static gamma measurements, and soil sample results collected from BG-1 and BG-3 were used for the remainder of the Removal Site Evaluation of the Site.

4.0 REFERENCES

MWH, 2016. *Navajo Nation AUM Environmental Response Trust – First Phase Removal Site Evaluation Work Plan*. October.

USEPA, 2000. *Multi-Agency Radiation Survey and Site Investigation Manual* (MARSSIM), EPA 402-R-97-016, Rev. 1.

Table D.1-1
Soil and Sediment Sampling Summary
Barton 3
Removal Site Evaluation Report - Final
Navajo Nation AUM Environmental Response Trust - First Phase

Statistic	Arsenic (mg/kg)	Molybdenum (mg/kg)	Selenium (mg/kg)	Uranium (mg/kg)	Vanadium (mg/kg)	Radium-226 (pCi/g)
Background Reference Area Study - Background Area 1 - Morrison Formation						
Total Number of Observations	16	16	16	16	16	16
Percent Non-Detects	--	69%	100%	--	--	--
Minimum[1]	0.900	--	--	0.960	4.70	0.900
Minimum Detect[2]	--	0.180	--	--	--	--
Mean[1]	1.89	--	--	2.30	7.83	3.24
Mean Detects[2]	--	0.228	--	--	--	--
Median[1]	1.85	--	--	1.95	7.15	2.13
Median Detects[2]	--	0.200	--	--	--	--
Maximum[1]	3.80	--	--	6.80	19.0	13.4
Maximum Detect[2]	--	0.290	--	--	--	--
Distribution	Normal	Normal	Not Calculated	Gamma	Normal	Gamma
Coefficient of Variation[1]	0.407	--	--	0.630	0.412	0.946
CV Detects[2]	--	0.231	--	--	--	--
UCL Type	95% Student's-t UCL	95% KM (t) UCL	Not Calculated	95% Adjusted Gamma UCL	95% Student's-t UCL	95% Adjusted Gamma UCL
UCL Result	2.22	0.144	Not Calculated	3.01	9.24	4.75
UTL Type	UTL Normal	UTL KM Normal	Not Calculated	UTL Gamma WH	UTL Normal	UTL Gamma WH
UTL Result	3.83	0.332	Not Calculated	6.36	16.0	11.8
Background Reference Area Study - Background Area 2 - Morrison Formation						
Total Number of Observations	11	11	11	11	11	11
Percent Non-Detects	--	82%	100%	--	--	--
Minimum	1.10	--	--	0.500	7.70	0.77
Minimum Detect	--	0.210	N/A	--	--	--
Mean	1.43	--	--	0.592	9.20	0.902
Mean Detects	--	0.445	N/A	--	--	--
Median	1.40	--	--	0.610	9.10	0.910
Median Detects	--	0.445	--	--	--	--
Maximum	1.70	--	--	0.660	11	1.06
Maximum Detect	--	0.680	N/A	--	--	--
Distribution	Normal	Unknown	Not Calculated	Normal	Normal	Normal
Coefficient of Variation	0.154	--	--	0.104	0.101	0.0987
CV Detects	--	0.747	--	--	--	--
UCL Type	95% Student's-t UCL	95% KM (Chebyshev) UCL	Not Calculated	95% Student's-t UCL	95% Student's-t UCL	95% Student's-t UCL
UCL Result	1.547	0.458	Not Calculated	0.625	9.71	0.950
UTL Type	UTL Normal	Non-Parametric -Max	Not Calculated	UTL Normal	UTL Normal	UTL Normal
UTL Result	2.045	0.68	Not Calculated	0.764	11.83	1.152

Table D.1-1
Soil and Sediment Sampling Summary
Barton 3
Removal Site Evaluation Report - Final
Navajo Nation AUM Environmental Response Trust - First Phase

Statistic	Arsenic (mg/kg)	Molybdenum (mg/kg)	Selenium (mg/kg)	Uranium (mg/kg)	Vanadium (mg/kg)	Radium-226 (pCi/g)
Background Reference Area Study - Background Area 3 - Summerville Formation and Quaternary Deposits						
Total Number of Observations	11	11	11	11	11	11
Percent Non-Detects	--	--	100%	--	--	--
Minimum[1]	0.900	0.250	--	0.910	9.90	1.24
Minimum Detect[2]	--	--	--	--	--	--
Mean[1]	1.06	0.289	--	0.981	10.6	1.44
Mean Detects[2]	--	--	--	--	--	--
Median[1]	1.00	0.300	--	0.990	11.0	1.45
Maximum[1]	1.40	0.330	--	1.10	12.0	1.63
Maximum Detect[2]	--	--	--	--	--	--
Distribution	Normal	Normal	Not Calculated	Normal	Normal	Normal
Coefficient of Variation[1]	0.148	0.096	--	0.053	0.065	0.081
UCL Type	95% Student's-t UCL	95% Student's-t UCL	Not Calculated	95% Student's-t UCL	95% Student's-t UCL	95% Student's-t UCL
UCL Result	1.15	0.304	Not Calculated	1.01	11.0	1.51
UTL Type	UTL Normal	UTL Normal	Not Calculated	UTL Normal	UTL Normal	UTL Normal
UTL Result	1.50	0.367	Not Calculated	1.13	12.6	1.77

Notes

CV	Coefficient of variation
KM	Kaplan Meier
mg/kg	Milligrams per kilogram
--	Not applicable
pCi/g	Picocuries per gram
WH	Wilson Hilferty

[1] This statistic is reported by ProUCL when the dataset contains 100 percent detections.
[2] This statistic is reported by ProUCL when non-detect values exist in the dataset. The value reported is calculated using detections only.

Table D.1-2
Surface Gamma Survey Summary
Barton 3
Removal Site Evaluation Report - Final
Navajo Nation AUM Environmental Response Trust - First Phase

	Background Reference Area 1 (BG-1)	Background Reference Area 2 (BG-2)	Background Reference Area 3 (BG-3)	Background Reference Area 4 (BG-4)	Background Reference Area 5 (BG-5)
Geologic Formation	Morrison Formation	Morrison Formation	Summerville Formation & Quaternary Deposits	Summerville Formation & Quaternary Deposits	Summerville Formation & Quaternary Deposits
Statistic					
Total Number of Observations	310	186	474	412	706
Minimum	7,228	5,407	6,583	7,833	8,010
Mean	11,990	7,198	9,354	9,426	10,631
Median	9,936	7,148	9,290	9,402	10,576
Maximum	36,911	8,979	11,726	11,953	13,276
Distribution	Normal	Normal	Normal	Gamma	Gamma
Coefficient of Variation	0.445	0.0902	0.08	0.0769	0.0828
UCL Type	95% Student's-t UCL	95% Student's-t UCL	95% Student's-t UCL	95% Approximate Gamma UCL	95% Approximate Gamma UCL
UCL Result	12,490	7,277	9,411	9,484	10,686
UTL Type	UTL Normal	UTL Normal	UTL Normal	UTL Gamma WH	UTL Gamma WH
UTL Result	21,576	8,395	10,677	10,737	12,207

Notes
cpm Counts per minute
UCL Upper confidence limit
UTL Upper tolerance limit
WH Wilson Hilferty

NOTE:

Based on field observations at the Site, bedrock units shown are near surface (typically within 1 foot), but do not necessarily outcrop and may be overlain by minor Q deposits.

REFERENCES:

Coordinate System: NAD 1983 UTM Zone 12N

Basemap image accessed from the National Agriculture Imagery Program (NAIP) web mapping service (https://gis.apfo.usda.gov/arcgis/services/) on 09/2018.

Wind Rose: USEPA, 2007a

Geology adapted from O'Sullivan, R.B., and Beikman, H.M (1963): O'Sullivan, R.B., and Beikman, H.M, 1963, Geology, structure and uranium deposits of the Shiprock quadrangle, New Mexico and Arizona: U.S. Geological Survey I-345, scale 1:250,000.

N
W E
S

0 200 400
Feet

Cortez Airport, Colorado Wind Rose (KCEZ), 1996-2006

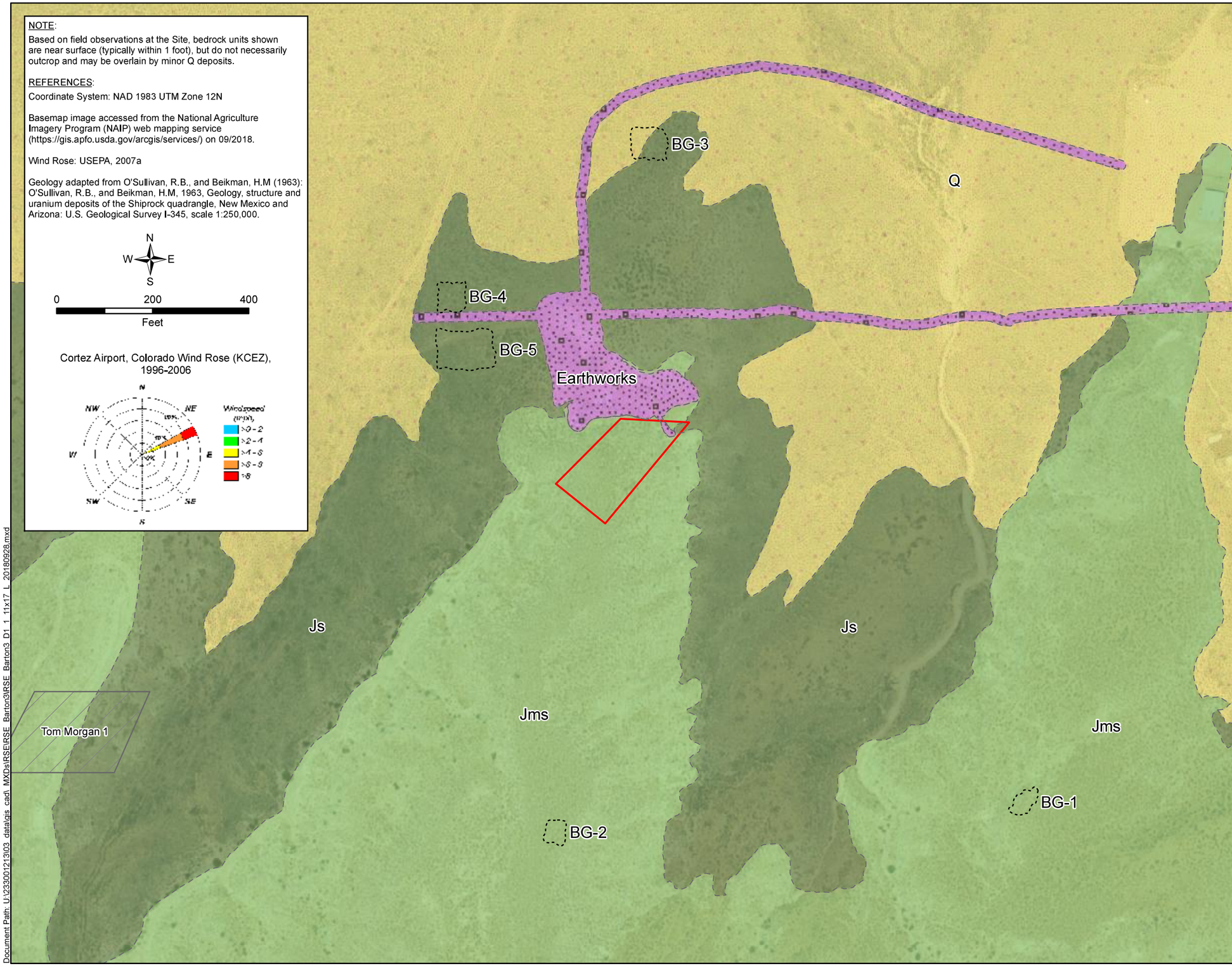

NAVAJO NATION
AUM Environmental Response Trust-First Phase

LEGEND

- Potential Background Reference Area
- Claim Boundary
- Other Claim Boundary
- Geologic Contact (Inferred)

Site Geology

HOLOCENE

- Earthworks: Human-caused disturbance of the land surface related to mining.
- Q: Quaternary Deposits – Undifferentiated (Pleistocene and Holocene) – includes sandy to gravelly colluvial and alluvial deposits, and eolian sand deposits.

JURASSIC

- Jms: Salt Wash Member of the Morrison Formation (Upper Jurassic) – Yellowish gray to greenish-gray cross-bedded very fine to medium-grained calcareous sandstone inter-bedded with greenish-gray and reddish-brown claystone.
- Js: Summerville Formation (Upper Jurassic) – Reddish-brown to light-orange very fine- to fine-grained flat bedded silty sandstone and thin-bedded silty sandstone, claystone, and siltstone; forms banded steep slopes and cliffs.

TITLE: Geologic Map and Potential Background Reference Areas

PROJECT: Removal Site Evaluation Barton 3 Mine Site

DATE: 9/28/2018

DOCUMENT NAME: Removal Site Evaluation Report

Stantec

AUTHOR: CBB

REVIEWER: EDZ

FIGURE: D.1-1

Document Path: U:\233001213\03_data\gis_cad_MXDs\RSE\RSE_Barton3\RSE_Barton3_D1_1_11x17_L_20180928.mxd

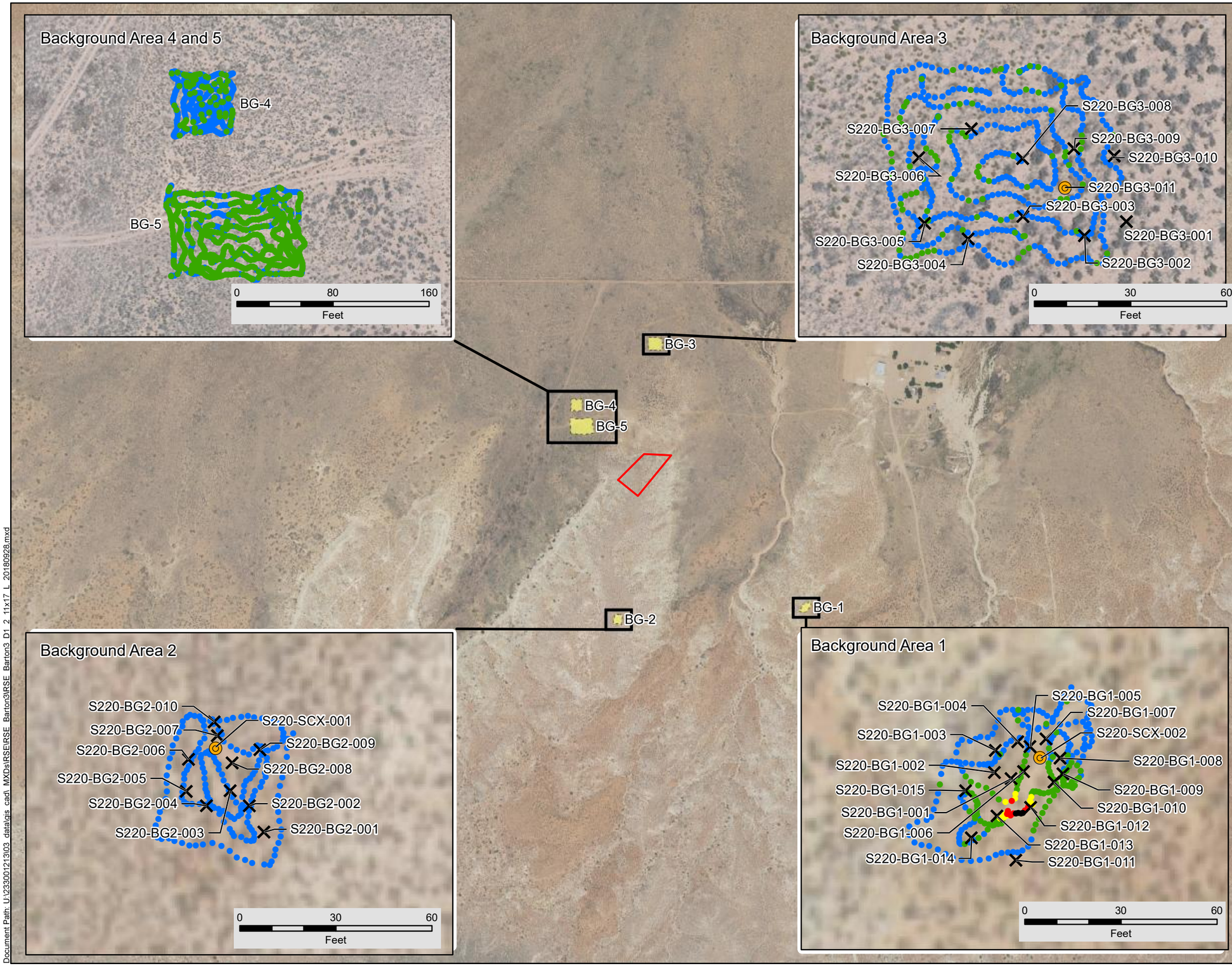

NAVAJO NATION
AUM Environmental Response Trust-First Phase

LEGEND

- Surface Sample Location
- Subsurface Borehole Location at Background Reference
- Potential Background Reference Area
- Claim Boundary

Gamma Survey

Counts per Minute (CPM)

- 5,407 - 10,000
- 10,001 - 17,500
- 17,501 - 25,000
- 25,001 - 32,500
- 32,501 - 36,911

REFERENCES:
Coordinate System: NAD 1983 UTM Zone 12N

Main display and Background Areas 1 and 2 basemap image accessed from the National Agriculture Imagery Program (NAIP) web mapping service (https://gis.apfo.usda.gov/arcgis/services/) on 09/2018.

Background Areas 3, 4, 5 basemap image insets flown by Cooper Aerial Surveys Co. on June 16, 2017.

N W E S

0 500 1,000
Feet

TITLE:
Potential Background Reference Area Gamma Radiation Survey Results and Soil Sample Locations

PROJECT:
Removal Site Evaluation
Barton 3 Mine Site

DATE: 9/28/2018

DOCUMENT NAME: Removal Site Evaluation Report

AUTHOR: CBB
REVIEWER: EDZ

Stantec

FIGURE: D.1-2

Document Path: U:\233001213\03_data\gis_cad_MXDs\RSE\RSE_Barton3\RSE_Barton3_D1_2_11x17_L_20180928.mxd

STATISTICAL EVALUATION

1.0 INTRODUCTION

This statistical evaluation presents the methods used in, and results of, statistical analyses performed on gamma radiation survey results and soil sample analytical results collected from the Barton 3 Site (Site). The evaluation includes comparing background reference area and Survey Area data distributions, and documents the decision process followed to select site-specific investigation levels (ILs). The ILs are used to confirm contaminants of potential concern (COPCs) listed in the *RSE Work Plan*, and to support identification of technologically enhanced naturally occurring radioactive materials (TENORM) at the Site.

2.0 EVALUATIONS

The evaluation process included compiling the results for gamma radiation surveys and soil sample analytical results from two background reference areas and two Survey Areas. These areas are designated Background Reference Area 1 (BG-1), Background Reference Area 3 (BG-3), Survey Area A and Survey Area B. The Background Reference Areas BG-1 and BG-3 were selected to represent the site conditions at Survey Areas A and B, respectively, as described in Appendix D.1. The gamma radiation survey data and soil sample analytical results for the background reference areas and Survey Areas were evaluated to determine the appropriate ILs for the Site as follows:

1. Identify and examine potential outlier values. Potential outlier values were identified statistically and, if justified upon further examination, removed from a dataset prior to further evaluation and calculations. No data were removed from the dataset for the calculations presented in this appendix.

2. Compare data populations between BG-1 and Survey Area A, and BG-3 and Survey Area B (box plots, probability plots, hypothesis testing with Wilcoxon Mann-Whitney test). Soil sample and gamma radiation survey results were compared between BG-1 and Survey Area A, and BG-3 and Survey Area B qualitatively and quantitatively to evaluate similarity or difference in data distributions between the areas, and as a component of evaluating background reference area adequacy and representativeness.

3. Develop descriptive statistics. Descriptive statistics for gamma survey results and soil sample analytical results (e.g., number of observations, mean, maximum, median, etc.) were generated to facilitate qualitative comparisons of soil sample and gamma radiation survey results from one area to another.

4. Select ILs for the Site based on the results of the statistical evaluations.

3.0 RESULTS

The following sections present the evaluation of potential outlier values in the dataset, calculated descriptive statistics, and comparison of data populations between groups in support of determining ILs for use at the Site.

3.1 POTENTIAL OUTLIER VALUES

A potential outlier is a data point within a random sample of a population that is different enough from the majority of other values in the sample as to be considered potentially unrepresentative of the population, and therefore requires further inspection and evaluation. Unrepresentative values in a dataset have the potential to yield distorted estimates of population parameters of interest (e.g., means, upper confidence limits, and upper percentiles). Therefore, potential outliers in the Site data were evaluated further prior to performing data comparisons (Section 3.2) and developing the descriptive statistics (Section 3.3). In the context of this statistical evaluation, extreme values and statistical outliers are referred to as potential outliers.

A potential outlier value in a sample may be a true representative value in the test population (not a "discrepant" value), simply representing a degree of inherent variation present in the population. Furthermore, a statistical determination of one or more potential outliers does not indicate that the measurements are actually discrepant from the rest of the data set. Therefore, general statistical guidance does not recommend that extreme values (potential outliers) be removed from an analysis solely on a statistical basis. Statistical outlier tests can provide supportive information, but a reasonable scientific rationale needs to be identified for the removal of any potential outlier values (e.g., sampling error, records error, or the potential outlier is determined to violate underlying assumptions of the sampling design, such as the targeted geology).

At BG-1 and BG-3, soil samples were collected randomly. Potential outliers in the BG-1 and BG-3 datasets were examined using box plots, probability plots and statistical testing. Descriptive statistics were then calculated with and without the potential outliers, as applicable. Finally, the potential outlier values were evaluated to determine if a scientific reason could be found to remove the data points before calculating the final statistics. The results of these evaluations are described in the following sections.

In Survey Areas A and B, soil samples were collected using a judgmental sampling approach. Specifically, some sample locations were selected to characterize areas of higher gamma radiation and, as a result, potential outlier values are not unexpected. Descriptive statistics and comparisons of the Survey Areas to BG-1 and BG-3 are still presented for qualitative assessment. However, potential outlier values in the Survey Areas are not evaluated further nor removed from the dataset.

3.1.1 Box Plots

Box plots depict descriptive statistics from a group of data (Figure 1A). The interquartile range is represented by the bounds of the box, the minimum and maximum values, not including potential outlier values (extreme values), are depicted by the whiskers (vertical lines), and any potential outliers are identified as singular dots. Potential outliers in this context are defined as values outside 1.5 times the interquartile range above or below the box.

3.1.1.1 Soil Sample Results Box Plots

Figure 1A. Survey Areas A, B and Background Reference Areas 1 (BG-1) and 3 (BG-3) Soil Sample Box Plots

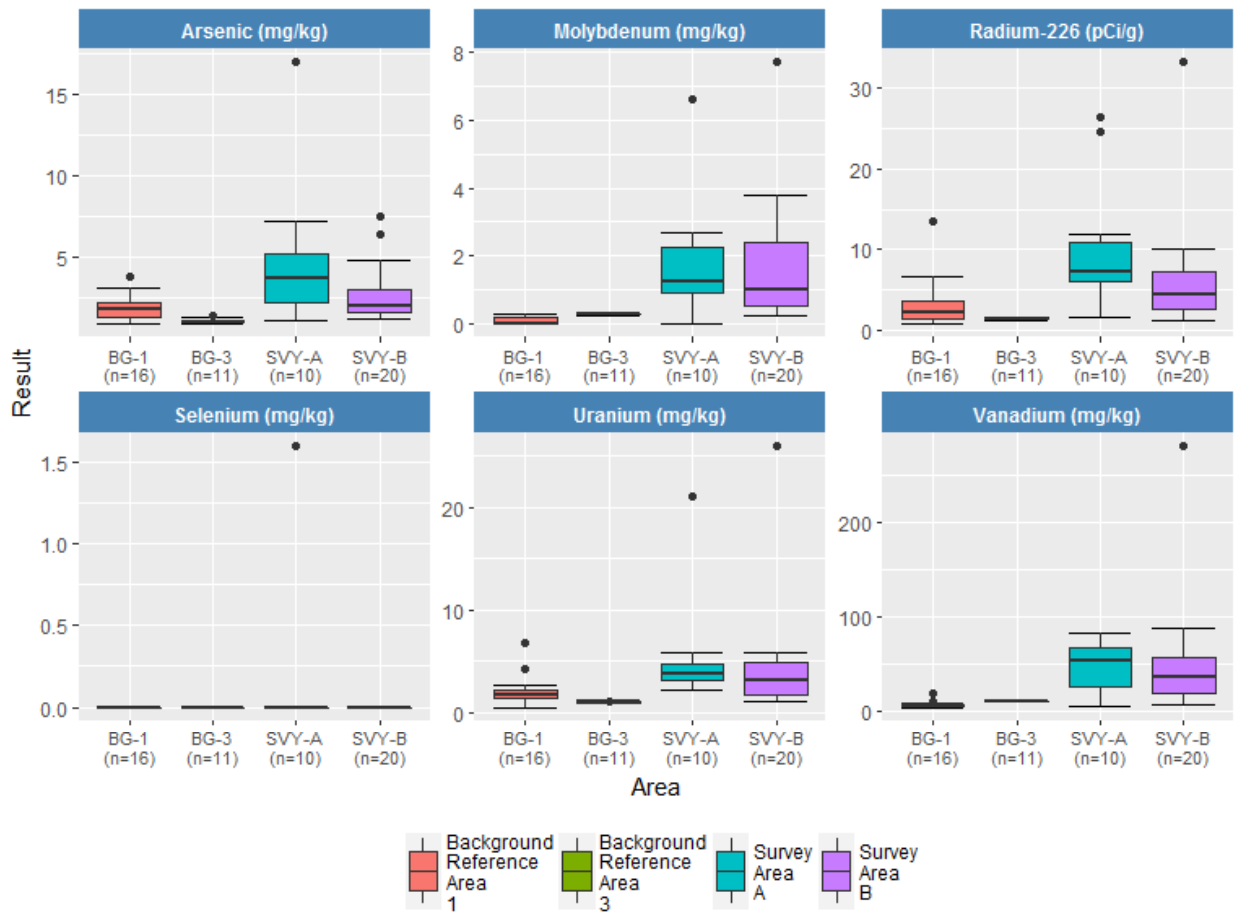

The soil sample box plots shown on Figure 1A depict differences in the data distribution for analytical constituent concentrations between background reference areas and Survey Areas. Potential outlier values are shown for both background reference areas and the Survey Areas at the Site.

Potential outlier values are of greatest concern in the background reference area datasets as the data from the background reference areas are used to determine the ILs. Background reference area data are presented alone in Figure 1B.

Figure 1B. Background Reference Area 1 (BG-1) and 3 (BG-3) Soil Sample Box Plots

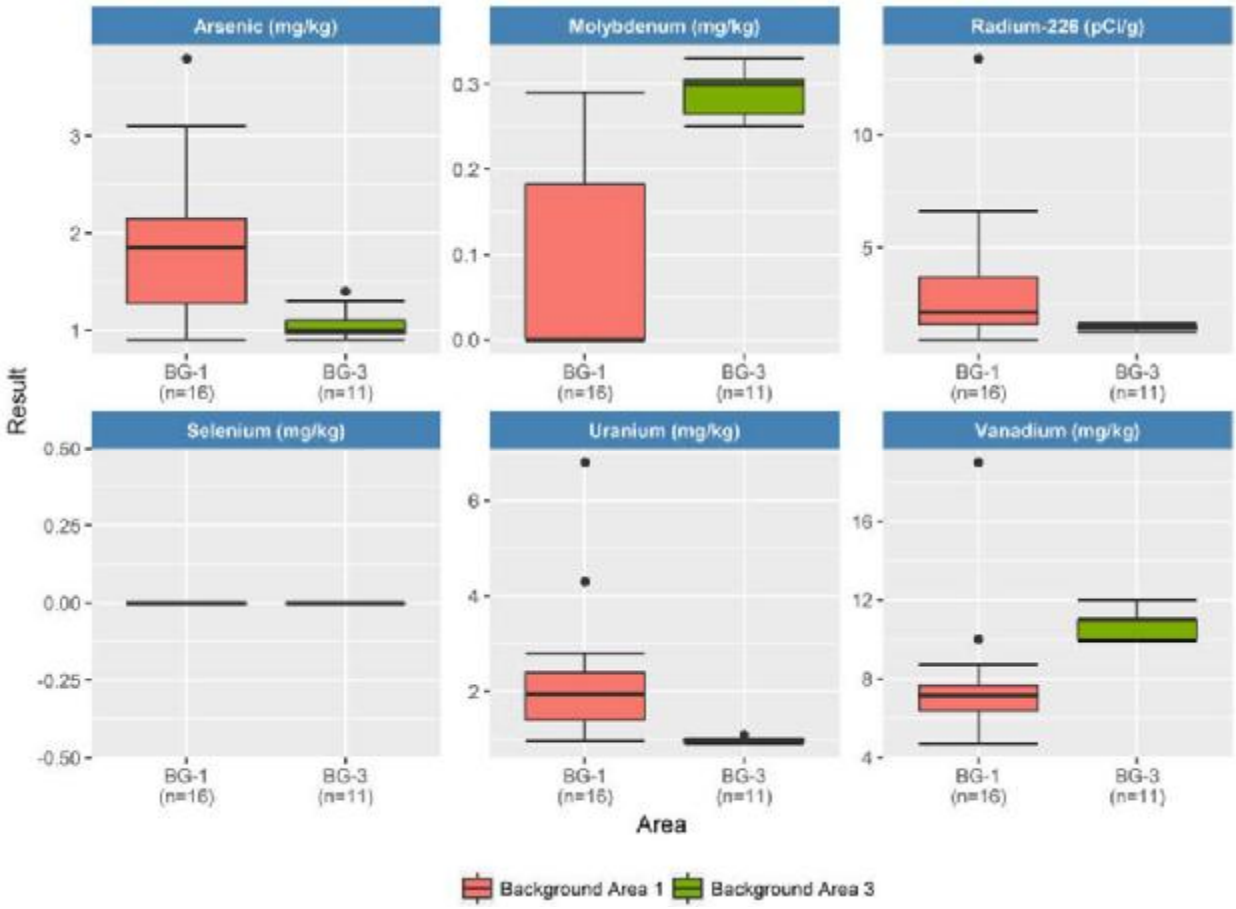

One high value (i.e., outside 1.5 times the interquartile range) for arsenic (As) and radium (Ra-226), and two values for uranium (U) and vanadium (V) were identified as potential outlier values in the BG-1 box plots in Figure 1B. One high value each for arsenic (As) and uranium (U) were identified as potential outlier values in the BG-3 box plots in Figure 1B. These potential outlier values are further evaluated with the use of probability plots in Section 3.1.2 and statistical outlier testing in Section 3.1.3.

3.1.1.2 Gamma Radiation Results Box Plots

Figure 2A. Survey Areas A, B and Background Reference Areas 1 and 3 Gamma Radiation Box Plots

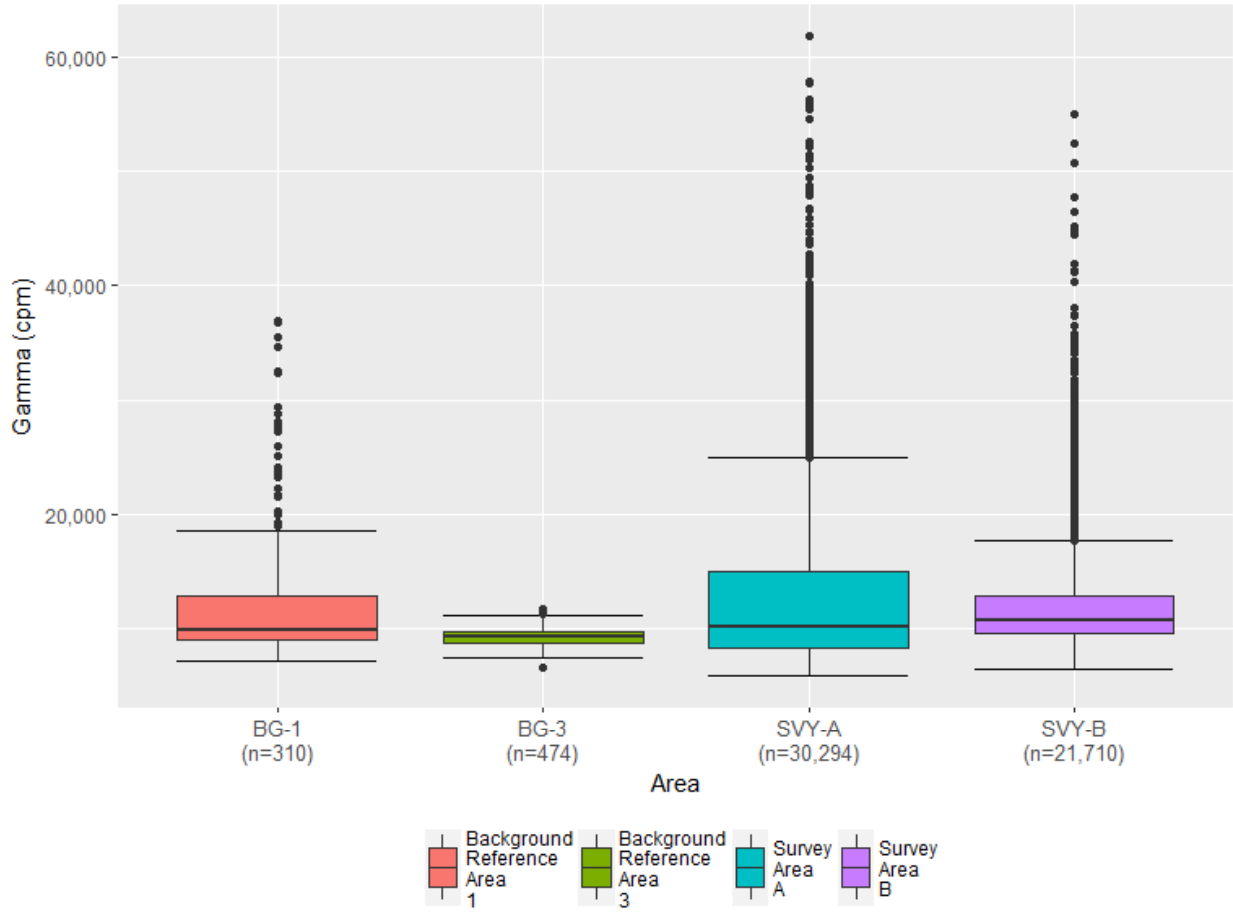

The gamma radiation survey results box plots shown on Figure 2A depict differences in the data distribution for gamma measurements between the background reference areas and Survey Areas. The large number of potential outlier values in the box plots for the Survey Areas indicates high skewness, or possibly non-normally distributed data, instead of outlier values. This is evaluated with the use of probability plots in Section 3.1.2 and further statistical outlier testing in Section 3.1.4. Based on Site geology, the potential gamma radiation outlier values observed for the Survey Area data on Figure 2A represent localized areas of higher gamma radiation with respect to other parts of the Survey Areas, as would be expected in areas with varying levels of mineralization, naturally occurring radioactive material (NORM), and potential TENORM.

Figure 2B. Background Reference Areas 1 and 3 Gamma Radiation Box Plots

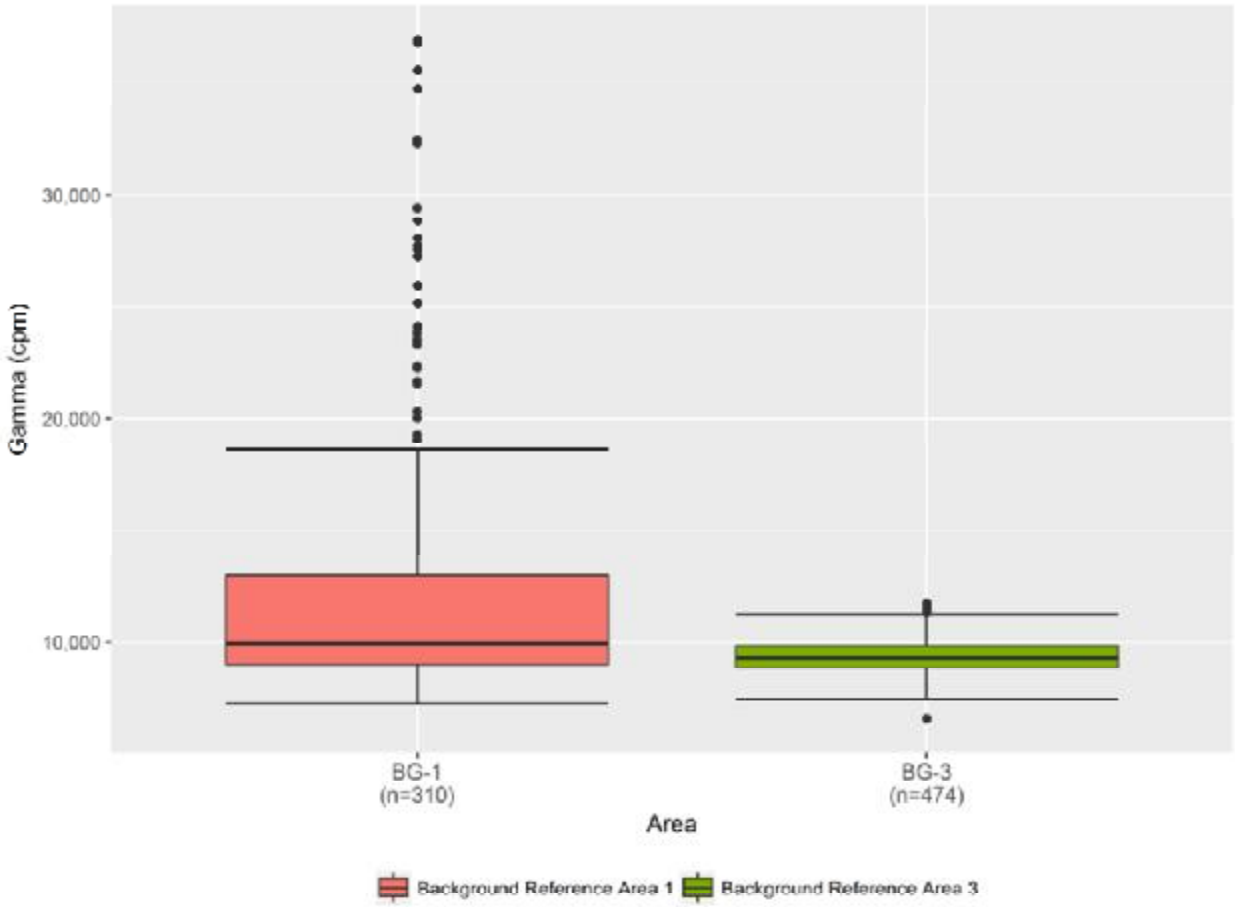

As shown in Figure 2B there are potential outlier values shown for the gamma data in the BG-1 dataset. These values are quite high, up to 37,000 counts per minute (cpm), and may represent heterogeneity within BG-1.

3.1.2 Probability Plots

The normal probability plot is a graphical technique for assessing whether a data set is approximately normally distributed and where there may be potential outlier values. The data are plotted against a theoretical normal distribution in such a way that the points, if normally distributed, should form an approximate straight line. Curved lines may indicate non-normally or log-normally distributed data, and "S"-shaped lines may indicate two distinct groups within the dataset.

3.1.2.1 Soil Sample Results Probability Plots

Figure 3 depicts the probability plots for metals and Ra-226 results at BG-1.

Figure 3. Background Reference Area 1 (BG-1) Soil Sample Probability Plots

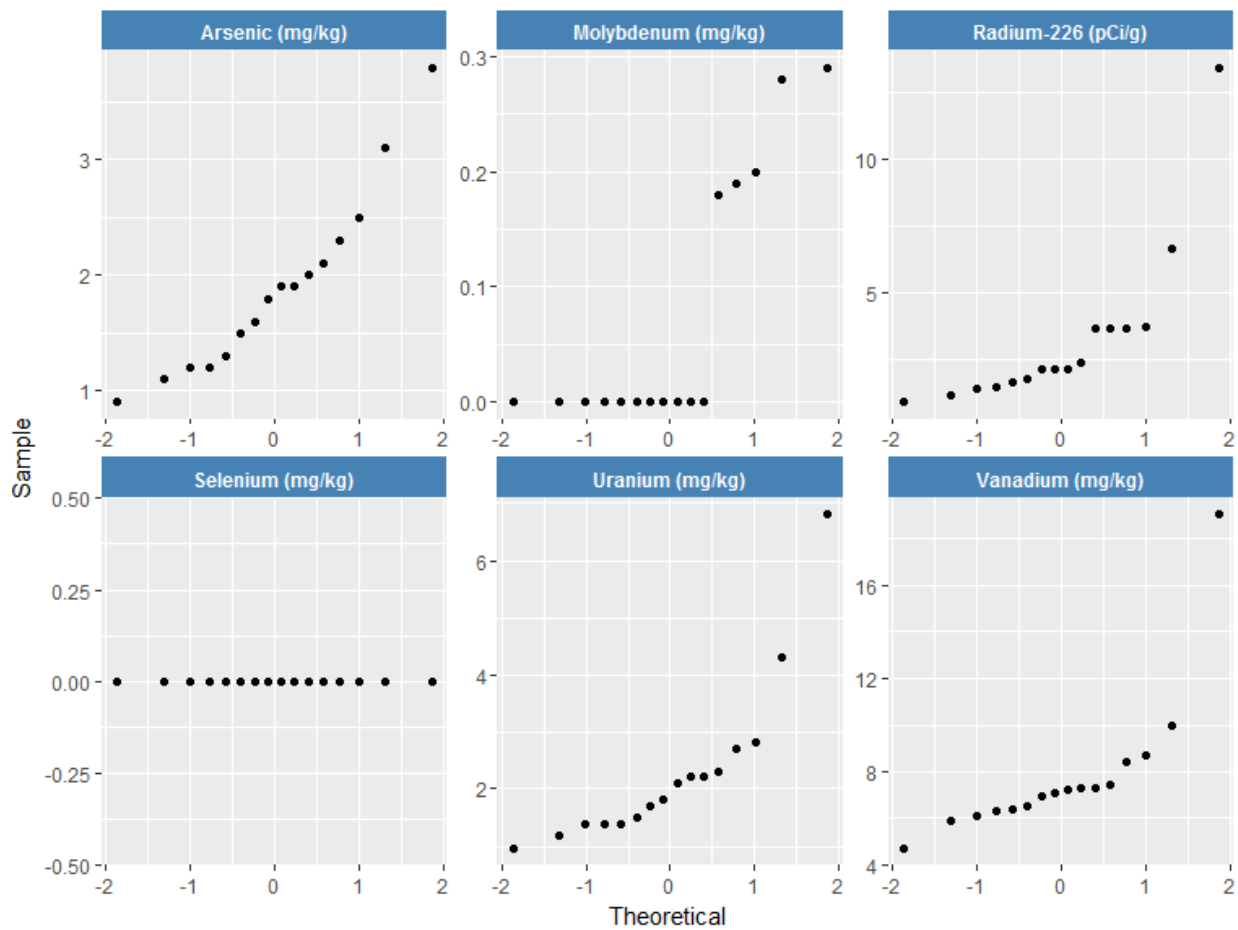

One extreme value in the arsenic dataset, one extreme value in the Ra-226 dataset, and two extreme values in each of the uranium and vanadium datasets were identified in the box plots in Figure 1B. When viewed in the probability plots in Figure 3, the highest arsenic value does not

appear to be substantially higher than, or out of line with, the rest of the arsenic dataset. The extreme Ra-226 value does indeed appear to be removed from the rest of the dataset, being approximately twice as high as the next lower value in the dataset. The two highest uranium values, and the highest vanadium value, likewise do not conform to the general distribution of their respective datasets; the second highest vanadium value is only slightly out of line with the rest of the vanadium dataset. These six potential outlier values were tested for statistical significance in Section 3.1.3. All 11 soil samples at BG-1 were non-detect for selenium (Se).

Figure 4. Background Reference Area 3 (BG-3) Soil Sample Probability Plots

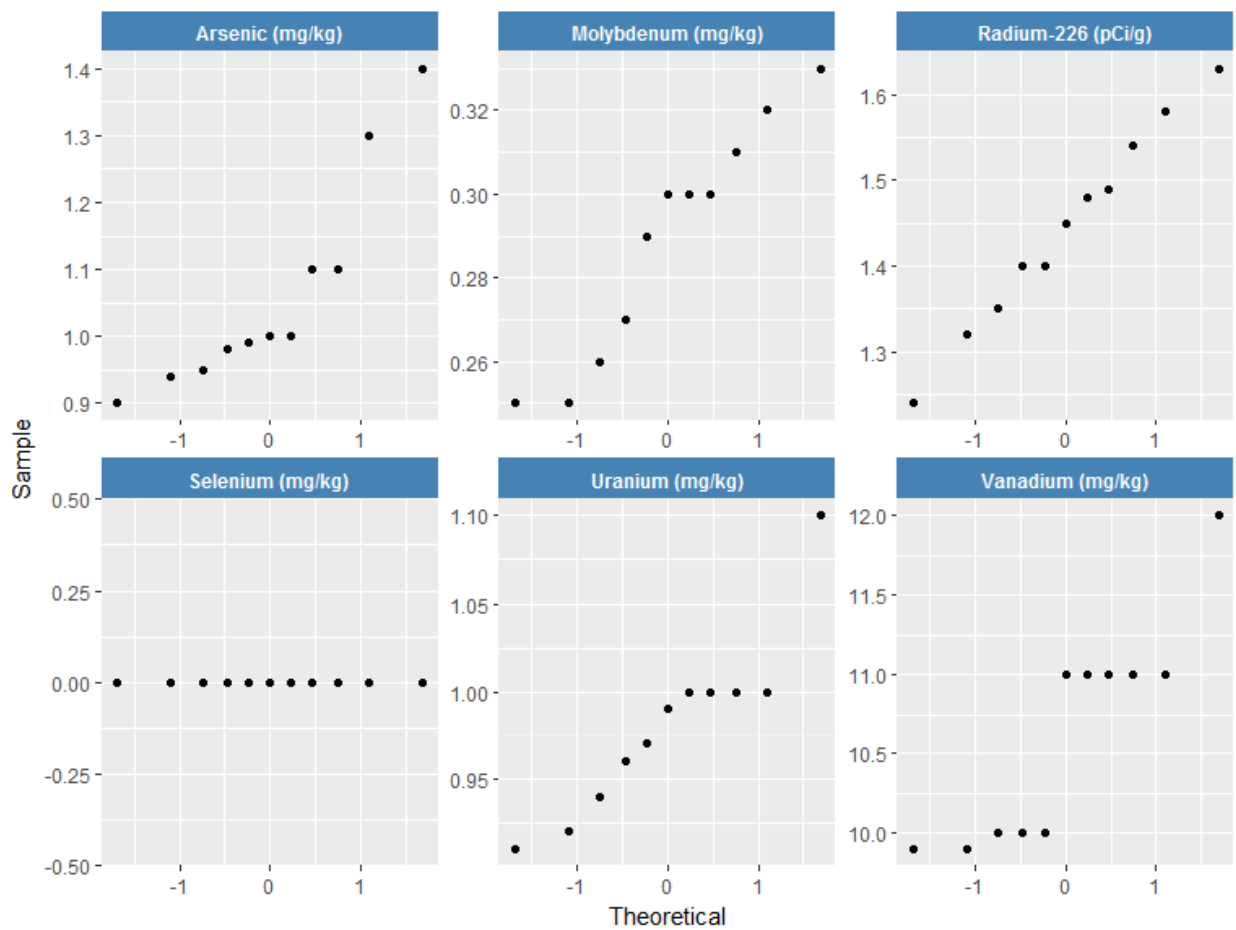

One extreme value in the arsenic dataset, and one extreme value in the uranium dataset were identified as potential outliers in the box plots in Figure 1B. When viewed in the probability plots in Figure 4, the highest arsenic value does not appear to be substantially higher than, or out of line with, the rest of the arsenic dataset. The highest uranium value does indeed appear to be removed from the rest of the dataset, though given the scale of the plot, the difference between the highest value and the next highest value is no more than 0.10 mg/kg. These two values were tested for statistical significance as potential outliers in Section 3.1.3. All 11 soil samples at BG-3 were non-detect for selenium (Se).

3.1.2.2 Gamma Survey Results Probability Plots

Figure 5 depicts the probability plots for gamma radiation results at the two background reference areas and two Survey Areas.

Figure 5. Survey Area and Background Reference Area Gamma Probability Plots

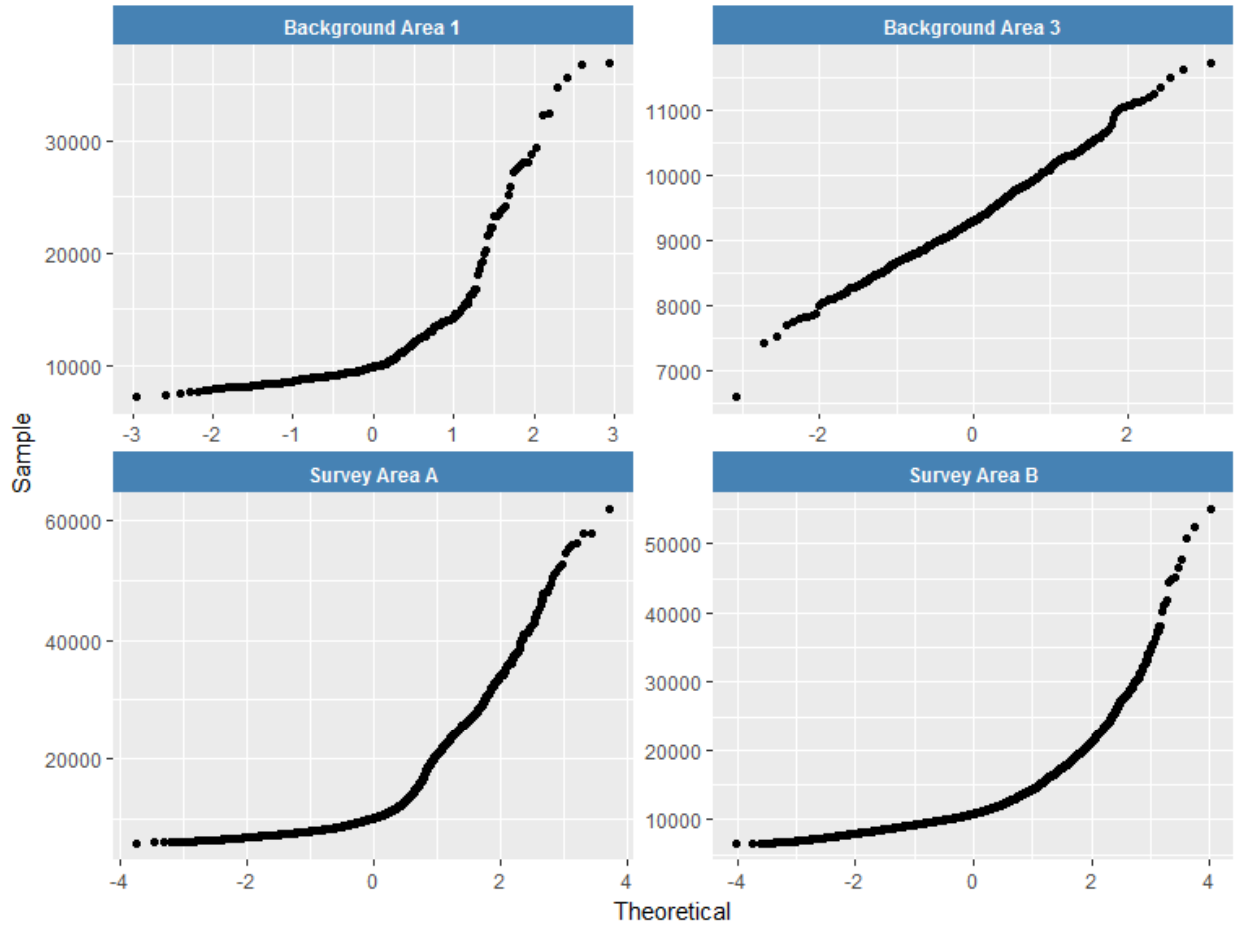

Gamma survey results indicate a generally normal distribution in the Background Reference Area 3 (BG-3) dataset, and likely a non-normal distribution in the Background Reference Area 1 (BG-1) and both Survey Area datasets (Figure 5). When viewed in the probability plot, the values identified as potential outliers in the BG-1 gamma dataset in the box plot in Figure 2B conform to the general distribution of the rest of the dataset, suggesting they are representative of BG-1. However, these values are extreme in comparison to the gamma levels normally observed in background reference areas for other Sites.

The shape and smoothness of the probability plots for the Survey Areas and BG-1 gamma results confirm that the gamma radiation data are more log-normally distributed than the BG-3 gamma results. This suggests that these higher values are not outliers but rather are representative of the spatial variability of gamma radiation in the Survey Areas. For BG-1, the

gamma results appear log-normally distributed and are heterogeneous. The potential outlier values from BG-1 occur in a small, localized area in the southern portion of the background reference area and represent a mineralized zone within that area, as shown in Appendix D.1. Nevertheless, these values were tested for statistical significance as potential outliers in Section 3.1.4.

3.1.3 Potential Soil Sample Data Outliers

Eight high values were identified as potential outlier values in the background reference area datasets in the box plots in Figure 1B and probability plots in Figures 3 and 4.

These values are:

Background Reference Area 1 (BG-1)

- Arsenic: 3.80 mg/kg
- Ra-226: 13.4 pCi/g
- Uranium: 4.30 mg/kg, 6.80 mg/kg
- Vanadium: 10.0 mg/kg, 19.0 mg/kg

Background Reference Area 3 (BG-3)

- Arsenic: 1.40 mg/kg
- Uranium: 1.10 mg/kg

Dixon's Test (Dixon, 1953) is designed to be used for datasets containing only one or two potential outlier values. Therefore, Dixon's Test was performed to the 95% confidence level on each of the potential soil sample outlier values. The results of Dixon's Test are summarized in Table 1.

Table 1. Summary of Dixon's Test on Maximum Values

Area	Constituent	Location ID	Method	Hypothesis	p_Value	Conclusion
Background Area 1 (BG-1)	As	S220-BG1-009	Dixon test for potential outliers	High value 3.80 is a potential outlier	> 0.05	Hypothesis rejected
	Ra-226	S220-BG1-012	Dixon test for potential outliers	High value 13.4 is a potential outlier	< 0.05	Hypothesis accepted
	U	S220-BG1-009	Dixon test for potential outliers	High value 6.80 is a potential outlier	< 0.05	Hypothesis accepted
	U	S220-BG1-010	Dixon test for potential outliers	High value 4.30 is a potential outlier	> 0.05	Hypothesis rejected
	V	S220-BG1-009	Dixon test for potential outliers	High value 19.0 is a potential outlier	< 0.05	Hypothesis accepted
	V	S220-BG1-010	Dixon test for potential outliers	High value 10.0 is a potential outlier	> 0.05	Hypothesis rejected
Background Area 3 (BG-3)	As	S220-BG3-003	Dixon test for potential outliers	High value 1.40 is a potential outlier	< 0.05	Hypothesis accepted
	U	S220-BG3-008	Dixon test for potential outliers	High value 1.10 is a potential outlier	> 0.05	Hypothesis rejected

As - Arsenic, Mo - Molybdenum, Se - Selenium, Ra-226 - Radium 226, U - Uranium, V - Vanadium

The test confirms that four potential soil sample outlier values are statistically significant (p value < 0.05). These statistically significant potential outlier values were further investigated by reviewing sample forms, field notes and laboratory reports.

For BG-1, field staff and field notes did not indicate anything in error with these samples and how they were collected. The laboratory dataset shows no data quality flags were applied to these values that would call their accuracy into question. Four “J” flags were reported by the laboratory, though this is not a sufficient reason for rejecting these results.

While no sampling or laboratory errors were identified in the records review, the geology at BG-1 was noted visually to be possibly heterogeneous. The gamma measurements and some of the metals analytical results at BG-1 support this observation as presented in the box plots and probability plots for this background reference area. The size of the Morrison Formation that was investigated (BG-1, 0.05 acres and Survey Area A, 3.36 acres) was small and it is unknown if the green sands observed in BG-1 are truly representative of the Morrison Formation. These sands were also observed at another nearby site being investigated by the Trust i.e., NA-0928 in an undisturbed area. Further investigation of the Morrison Formation is suggested.

For BG-3, the laboratory dataset shows no data quality flags were applied to these values that would call their accuracy into question. The potential outlier values at BG-3 are considered representative of the natural variation present at this background reference area.

In each case for BG-1 and BG-3, descriptive statistics were calculated inclusive of all data (Section 3.3.1).

3.1.4 Potential Gamma Data Outliers

Potential gamma survey outlier values are observed for the BG-1 and BG-3 gamma datasets shown in the box plots in Figure 2B. When viewed in the probability plot in Figure 5, the values do appear to conform to the general distribution of the BG-1 gamma dataset. Potential outlier values in the BG-3 dataset are shown to conform to the general distribution of the BG-3 gamma dataset. Because the number of values in the BG-1 and BG-3 gamma datasets is >30, Dixon's Test was not appropriate for testing potential outliers. Instead, it was appropriate to identify potential statistical outliers using Z, t and chi squared scoring methods at the 95% confidence level. These tests were performed in the 'Outliers' package in R (Lukasz Komsta, 2011), and the results are summarized in Table 2. The R programming language complements ProUCL in its ability to provide more meaningful and useful graphics and summarizes the results equivalent to ProUCL. Because ProUCL and R packages follow similar statistical procedures, the results are comparable. The interquartile range evaluation (values outside 1.5 times the interquartile range) results are also provided in Table 2.

The values shown in Table 2 are deemed statistical outliers (potential outliers) and represent 29 (BG-1) and 5 (BG-3) out of 784 data points (4.3 percent). One possible reason for the potential outlier in the gamma radiation dataset may be the presence of a localized source of radiation within a background reference area, which was observed at BG-1 (see Appendix D.1). This was evaluated in the BG-1 dataset by viewing the relative position of the extreme values relative to each other. The extreme values are clustered together in the central southern portion of BG-1. The cluster supports the hypothesis of a localized source of radiation at BG-1. The field notes and the gamma data record did not indicate a reason for these values to be excluded from the dataset related to sampling errors (e.g., data handling error, equipment malfunction); however there was green sand observed at BG-1. Due to the small survey area of BG-1, uncertainty surrounds the representativeness of the green sands recorded in the Morrison Formation. Based on available information, and a similar field observation at a nearby mine site being investigated by the Trust, there is no scientific justification to exclude the area. Further investigation of the Morrison Formation is suggested as part of site investigation activities in the future.

The field notes and the gamma data records for BG-3 did not indicate a scientific reason for the potential outlier values to be excluded from the dataset (e.g., data handling error, equipment malfunction), there was no record of anomalous soil at BG-3, and the potential outlier values were randomly located throughout the BG-3 area, rather than being collocated as in BG-1. There is no basis to remove the potential outlier values from the BG-3 dataset for determining the IL.

Table 2. Potential Gamma Outlier Interquartile Range, Z Score, t Score and Chi Squared Score Results

Area	Value (cpm)	Interquartile Range Result	Z Score Result	t Score Result	Chi Sq Score Result
Background Area 1 (BG-1)	36,911	High	Potential Outlier	Potential Outlier	Potential Outlier
	36,767	High	Potential Outlier	Potential Outlier	Potential Outlier
	35,563	High	Potential Outlier	Potential Outlier	Potential Outlier
	34,721	High	Potential Outlier	Potential Outlier	Potential Outlier
	32,454	High	Potential Outlier	Potential Outlier	Potential Outlier
	32,320	High	Potential Outlier	Potential Outlier	Potential Outlier
	29,432	High	Potential Outlier	Potential Outlier	Potential Outlier
	28,842	High	Potential Outlier	Potential Outlier	Potential Outlier
	28,059	High	Potential Outlier	Potential Outlier	Potential Outlier
	28,058	High	Potential Outlier	Potential Outlier	Potential Outlier
	27,730	High	Potential Outlier	Potential Outlier	Potential Outlier
	27,530	High	Potential Outlier	Potential Outlier	Potential Outlier
	27,250	High	Potential Outlier	Potential Outlier	Potential Outlier
	25,939	High	Potential Outlier	Potential Outlier	Potential Outlier
	25,162	High	Potential Outlier	Potential Outlier	Potential Outlier
	24,144	High	Potential Outlier	Potential Outlier	Potential Outlier
	24,090	High	Potential Outlier	Potential Outlier	Potential Outlier
	23,786	High	Potential Outlier	Potential Outlier	Potential Outlier
	23,504	High	Potential Outlier	Potential Outlier	Potential Outlier
	23,353	High	Potential Outlier	Potential Outlier	Potential Outlier
	23,285	High	Potential Outlier	Potential Outlier	Potential Outlier
	22,320	High	Potential Outlier	Potential Outlier	Potential Outlier
	22,262	High	Potential Outlier	Potential Outlier	Potential Outlier
	21,656	High	Potential Outlier	Potential Outlier	Potential Outlier
	21,555	High	Potential Outlier	Potential Outlier	Potential Outlier
	20,328	High	Potential Outlier	Potential Outlier	Potential Outlier
	20,041	High	Potential Outlier	Potential Outlier	Potential Outlier
	19,279	High	Potential Outlier	Potential Outlier	Potential Outlier
	19,051	High	Potential Outlier	Potential Outlier	Potential Outlier
Background Area 3 (BG-3)	11,726	High	Potential Outlier	Potential Outlier	Potential Outlier
	11,608	High	Potential Outlier	Potential Outlier	Potential Outlier
	11,490	High	Potential Outlier	Potential Outlier	Potential Outlier
	11,333	High	Potential Outlier	Potential Outlier	Potential Outlier
	6,583	Low	Potential Outlier	Potential Outlier	Potential Outlier

cpm Counts per minute

Potential outlier values in the gamma datasets for the Survey Areas appear in the Figure 2B box plots. However, because of the non-linear shape and continuous distribution of gamma results shown in the probability plot in Figure 5, these values are thought to be representative of the heterogeneous nature of radioactive materials within the Survey Areas and are not outlier values. Indeed, Figure 4-1 of the RSE Report shows that while gamma results for the majority of each of the Survey Areas are within the range of background, localized areas of elevated gamma results associated with mineralized areas are also present.

3.2 COMPARE DATA POPULATIONS

Group comparison analyses provide insight into the relative concentrations of constituents between background reference areas and the Survey Areas. Observations made during these analyses may indicate the need for further evaluation or discussion regarding the influence of potential outlier values, and the use of background data. For instance, if two or more background areas were determined to be statistically similar to each other, these data could be combined to calculate more robust statistics (not a factor in this evaluation, as one background area each was selected to represent the two Survey Areas). Alternatively, testing of this kind may reveal background concentrations statistically higher than corresponding Survey Area concentrations, requiring additional interpretation or modifications in the use of background area datasets. Finally, results of these evaluations are a component of determining background reference area representativeness, though statistical comparisons are not the only factors to be considered in judging representativeness. Factors such as geologic materials, topographic gradient, distance from the site being represented, wind direction and non-impacted condition are all important to the selection of background reference areas.

Group comparisons, therefore, are considered instructive as a component of the overall evaluation of soil sample and gamma radiation survey results collected from BG-1, BG-3 and the Survey Areas. Relative data distributions were investigated by evaluating the box plots and probability plots in Figures 1A through 5, and by hypothesis testing with the non-parametric Mann-Whitney test, as applicable.

3.2.1 Evaluation of Box Plots

3.2.1.1 Soil Sample Box Plots

When interpreting the soil sample box plots in Figures 1A and 1B, it is important to note that samples at the background reference areas were collected randomly, while samples in the Survey Areas were collected judgmentally from areas of suspected contamination. Analytic constituent results from background reference areas tend to be lower than, or similar to, analytical results from their counterpart Survey Areas. Analytical constituent-specific observations from the box plots in Figures 1A and 1B indicate:

- Arsenic. Arsenic results appear slightly elevated at BG-1 relative to BG-3, and at Survey Area A relative to Survey Area B. Arsenic results at Survey Area A and Survey Area B are each higher than arsenic results in the background reference areas.

- Molybdenum. Molybdenum results appear similar in BG-1 and BG-3. Molybdenum in Survey Area A and Survey Area B appear to be similar. The molybdenum results in Survey Area A and Survey Area B are each higher than molybdenum results in the background reference areas.

- Ra-226. Ra-226 results appear slightly elevated at BG-1 relative to BG-3, and at Survey Area B relative to Survey Area A. Ra-226 results at Survey Area A and Survey Area B are each higher than Ra-226 results in the background reference areas.

- Selenium. Selenium was largely not detected in the background reference areas or Survey Areas, with a single detection at Survey Area A.

- Uranium. Uranium results appear slightly elevated at BG-1 relative to BG-3, and at Survey Area B relative to Survey Area A. Uranium results at Survey Area A and Survey Area B are each higher than uranium results in the background reference areas.

- Vanadium. Vanadium results appear similar in BG-1 and BG-3 although the median concentration is higher at BG-3 than at BG-1, and in Survey Area A and Survey Area B although the median concentration is higher at Survey Area A than at Survey Area B. The vanadium results in Survey Area A and Survey Area B are each higher than vanadium results in the background reference areas.

3.2.1.2 Gamma Radiation Box Plots and Probability Plots

The boxplot comparison in Figures 2A and 2B suggests that median values are similar between background reference areas and Survey Areas. However, gamma radiation results from BG-1 are more skewed and contain much higher results than BG-3. Gamma radiation data distributions between background reference areas and Survey Areas shown on Figure 5 are similarly non-normal between BG-1 and Survey Area A, while the data at BG-3 are normally distributed and are not similar to the non-normally distributed data shown for Survey Area B. These observations are further evaluated in Section 3.2.2 using the non-parametric Mann-Whitney test.

3.2.2 Mann-Whitney Testing

The Mann-Whitney test (Bain and Engelhardt, 1992) is a nonparametric test used for determining whether a difference exists between two or more population distributions. This test is also known as the Wilcoxon Rank Sum (WRS) test. This test evaluates whether measurements from one population consistently tend to be larger (or smaller) than those from another population. This test was selected over other comparative tests such as the Student's t test and analysis of variance (ANOVA) because it remains robust in the absence of required assumptions that these two tests require, such as normally distributed data and equality of variances.

Soil samples at the background reference areas were collected randomly, while soil samples in the Survey Areas were collected judgmentally (see Section 3.1). Data collected in a judgmental manner violate an underlying assumption of the Mann-Whitney test. Therefore, the Mann-Whitney tests were not performed with soil sample data from BG-1, BG-3 or the Survey Areas. The gamma radiation data, however, do represent non-judgmental sampling, and so the Mann-Whitney test was appropriate for comparison between BG-1, BG-3 and the Survey Areas (Table 3). Therefore, the test was performed two-sided between background areas, and the Survey Areas. The two-sided test accounts for results from one group being lower or higher than any

other group (i.e., independent of which group is higher). A test result p-value of 0.05 or smaller indicates that a significant difference exists between any two groups that are compared. Results of Mann-Whitney testing are presented in Table 3.

Table 3. Summary of Gamma Survey Mann-Whitney Test Results

Comparison	p_Value	Description
Background Reference Area 1 (BG-1) vs Survey Area A	0.563	No Significant Difference
Background Reference Area 1 (BG-1) Potential Outliers Excluded vs Background Reference Area 1 (BG-1)	<0.05	Significant Difference
Background Reference Area 1 (BG-1) Potential Outliers Excluded vs Survey Area A	0.071	No Significant Difference
Background Reference Area 3 (BG-3) vs Survey Area B	<0.05	Significant Difference
Background Reference Area 3 (BG-3) Potential Outliers Excluded vs Background Reference Area 3 (BG-3)	0.867	No Significant Difference
Background Reference Area 3 (BG-3) Potential Outliers Excluded vs Survey Area B	<0.05	Significant Difference
Background Reference Area 1 (BG-1) vs Background Reference Area 3 (BG-3)	<0.05	Significant Difference
Survey Area A vs Survey Area B	<0.05	Significant Difference

The results of the Mann-Whitney testing on gamma radiation survey results in Table 3 indicate the following:

- There is no statistical difference between gamma results in Survey Area A relative to BG-1, both with and without the inclusion of outliers at BG-1. Gamma results are statistically elevated in the full BG-1 dataset when compared with the BG-1 dataset with outliers removed.

- Gamma results at Survey Area B are statistically elevated with respect to gamma results at BG-3. This observation is valid with and without inclusion of outliers in the BG-3 dataset.

- Gamma results at BG-1 and Survey Area A are statistically elevated relative to gamma results at BG-3 and Survey Area B, respectively.

- The observation that gamma results at Survey Area B are statistically elevated relative to gamma results at BG-3 is likely attributable to the fact that BG-3 may not fully represent the degree of natural mineralization present at the Survey Area (see RSE Report Section 3.2.2.2). This latter point does not prohibit use of the gamma ILs calculated from BG-3, but this observation should be considered, as Site conditions are further evaluated for remediation.

- The inclusion or removal of outlier values has no statistical effect on data comparison between Survey Area A and BG-1 or Survey Area B and BG-3.

3.3 DESCRIPTIVE STATISTICS

Descriptive statistics, including the upper confidence limit (UCL) of the mean and the 95-95 upper tolerance limit (UTL), were calculated from gamma survey data and soil sample results. Descriptive statistics are important for any data evaluation to present the basic statistics of a data set with regards to its limits (maximum and minimum), central tendencies (mean and median) as well as data dispersion (coefficient of variance). The ILs for the Site also are taken from the descriptive statistics, namely the 95-95 UTL. The UTL value is selected by ProUCL as the maximum value in the dataset when the data are determined to be non-parametric. The parameters and constituents evaluated include gamma radiation, arsenic, molybdenum, selenium, uranium, vanadium, and Ra-226. Selenium results were 100 percent non-detect at BG-1 and BG-2, and, therefore, no statistics were calculated for selenium at these areas.

Statistics were calculated using Environmental Protection Agency (EPA) ProUCL version 5.1 software. Statistical methodology employed by the software is documented in the *ProUCL Version 5.1 Technical Guide Statistical Software for Environmental Applications for Data Sets with and without Nondetect Observations* (EPA, 2015). In the case of non-detect results, ProUCL does not recommend detection limit substitution methods (e.g., 1/2 the detection limit), considering these methods to be imprecise and out of date (EPA, 2015). The software instead calculates descriptive statistics for the detected results only, and follows various methods accordingly to calculate UCL and UTL values based on the percentage of non-detect results present in the dataset and on the distribution of the data (i.e., normal, lognormal, gamma, or unknown distribution).

Descriptive statistics for soil samples and gamma radiation survey results have been calculated with and without the potential outlier values previously identified, as applicable. Select descriptive statistics for these constituents are presented in Tables 4 and 5.

3.3.1 Soil Sample Analytical Results Summary

As described in Section 3.2.1.1, arsenic, molybdenum, uranium, vanadium, and Ra-226 results appear elevated at Survey Area A relative to BG-1 and at Survey Area B relative to BG-3. Selenium was not detected in the samples collected from BG-1 or BG-3. However, an important consideration when comparing concentrations of metals and Ra-226 between background reference areas and Survey Areas is that the background reference areas were selected to be representative of the geology present in the region around the Site, whereas the Survey Areas were selected as part of the mine claim because they are in an area of mineralized bedrock likely to have localized, naturally elevated uranium concentrations (see RSE Report Section 3.2.2.2). In addition, soil sampling for metals and Ra-226 in background reference areas was conducted in a random manner, whereas soil sampling for metals and Ra-226 in the Survey Areas was judgmental. As a result, it's not surprising that metals and Ra-226 concentrations in the Survey Areas appear to be elevated relative to concentrations in the background reference areas.

It should be noted, however, that concentrations of several of the metals measured in the Survey Areas are generally within the range of metals concentrations typically observed in Western U.S. soils (United States Geological Survey [USGS], 1984):

- Arsenic (mean = 5.5 mg/kg; range <0.10 – 97 mg/kg)
- Molybdenum (mean = 0.85 mg/kg; range <3 – 7 mg/kg)
- Selenium (mean = 0.23 mg/kg; range <0.1 – 4.3 mg/kg)
- Uranium (mean = 2.5 mg/kg; range 0.68 – 7.9 mg/kg)
- Vanadium (mean = 70 mg/kg; range 7 – 500 mg/kg)

As shown in Table 4, maximum detected concentrations of arsenic, molybdenum, selenium, and vanadium at Survey Area A, and maximum detected concentrations of arsenic, selenium, and vanadium at Survey Area B are within typical ranges reported for Western U.S soils, and may not be related to the uranium mineralization. Exceptions to the above are uranium at Survey Area A, and molybdenum and uranium at Survey Area B; elevated concentrations of these constituents in the Survey Areas are likely attributable to residual uranium concentrations and Ra-226 concentrations associated with the mining-related disturbances at the Site.

Table 4 presents the descriptive statistics output from the ProUCL software for the soil sample results.

Table 4. Summary of Soil Sampling Results

Area	Statistic	Arsenic (mg/kg)	Molybdenum (mg/kg)	Selenium (mg/kg)	Uranium (mg/kg)	Vanadium (mg/kg)	Radium-226 (pCi/g)
Background Reference Area 1 (BG-1) All Data	Total Number of Observations	16	16	16	16	16	16
	Percent Non-Detects	--	69%	100%	--	--	--
	Minimum[1]	0.900	--	--	0.960	4.70	0.900
	Minimum Detect[2]	--	0.180	--	--	--	--
	Mean[1]	1.89	--	--	2.30	7.83	3.24
	Mean Detects[2]	--	0.228	--	--	--	--
	Median[1]	1.85	--	--	1.95	7.15	2.13
	Median Detects[2]	--	0.200	--	--	--	--
	Maximum[1]	3.80	--	--	6.80	19.0	13.4
	Maximum Detect[2]	--	0.290	--	--	--	--
	Distribution	Normal	Normal	Not Calculated	Gamma	Normal	Gamma
	Coefficient of Variation[1]	0.407	--	--	0.630	0.412	0.946
	CV Detects[2]	--	0.231	--	--	--	--
	UCL Type	95% Student's-t UCL	95% KM (t) UCL	Not Calculated	95% Adjusted Gamma UCL	95% Student's-t UCL	95% Adjusted Gamma UCL
	UCL Result	2.22	0.144	Not Calculated	3.01	9.24	4.75
	UTL Type	UTL Normal	UTL KM Normal	Not Calculated	UTL Gamma WH	UTL Normal	UTL Gamma WH
	UTL Result	3.83	0.332	Not Calculated	6.36	16.0	11.8
Background Reference Area 1 (BG-1) Excluding Potential Outliers [3]	Total Number of Observations	--	--	--	15	15	15
	Minimum[1]	--	--	--	0.960	4.70	0.900
	Mean[1]	--	--	--	2.00	7.08	2.56
	Median[1]	--	--	--	1.80	7.10	2.11
	Maximum[1]	--	--	--	4.30	10.0	6.61
	Distribution	--	--	--	Normal	Normal	Normal
	Coefficient of Variation[1]	--	--	--	0.418	0.179	0.579
	UCL Type	--	--	--	95% Student's-t UCL	95% Student's-t UCL	95% Student's-t UCL
	UCL Result	--	--	--	2.38	7.66	3.24
	UTL Type	--	--	--	UTL Normal	UTL Normal	UTL Normal
	UTL Result	--	--	--	4.14	10.3	6.37
Background Reference Area 3 (BG-3) All Data	Total Number of Observations	11	11	11	11	11	11
	Percent Non-Detects	--	--	100%	--	--	--
	Minimum[1]	0.900	0.250	--	0.910	9.90	1.24
	Minimum Detect[2]	--	--	--	--	--	--
	Mean[1]	1.06	0.289	--	0.981	10.6	1.44
	Mean Detects[2]	--	--	--	--	--	--
	Median[1]	1.00	0.300	--	0.990	11.0	1.45
	Maximum[1]	1.40	0.330	--	1.10	12.0	1.63
	Maximum Detect[2]	--	--	--	--	--	--
	Distribution	Normal	Normal	Not Calculated	Normal	Normal	Normal
	Coefficient of Variation[1]	0.148	0.096	--	0.053	0.065	0.081
	UCL Type	95% Student's-t UCL	95% Student's-t UCL	Not Calculated	95% Student's-t UCL	95% Student's-t UCL	95% Student's-t UCL
	UCL Result	1.15	0.304	Not Calculated	1.01	11.0	1.51
	UTL Type	UTL Normal	UTL Normal	Not Calculated	UTL Normal	UTL Normal	UTL Normal
	UTL Result	1.50	0.367	Not Calculated	1.13	12.6	1.77
Background Reference Area 3 (BG-3) Excluding Potential Outliers [3]	Total Number of Observations	10	--	--	--	--	--
	Minimum[1]	0.900	--	--	--	--	--
	Mean[1]	1.03	--	--	--	--	--
	Median[1]	0.995	--	--	--	--	--
	Maximum[1]	1.30	--	--	--	--	--
	Distribution	Gamma	--	--	--	--	--
	Coefficient of Variation[1]	0.112	--	--	--	--	--
	UCL Type	95% Adjusted Gamma UCL	--	--	--	--	--
	UCL Result	1.11	--	--	--	--	--
	UTL Type	UTL Gamma WH	--	--	--	--	--
	UTL Result	1.38	--	--	--	--	--

Area	Statistic	Arsenic (mg/kg)	Molybdenum (mg/kg)	Selenium (mg/kg)	Uranium (mg/kg)	Vanadium (mg/kg)	Radium-226 (pCi/g)
Survey Area A	Total Number of Observations	10	10	10	10	10	10
	Percent Non-Detects	--	10%	90%	--	--	--
	Minimum[1]	1.10	--	--	2.20	5.70	1.65
	Minimum Detect[2]	--	0.370	1.60	--	--	--
	Mean[1]	4.94	--	--	5.44	49.8	10.5
	Mean Detects[2]	--	2.02	1.60	--	--	--
	Median[1]	3.70	--	--	3.80	53.5	7.20
	Median Detects[2]	--	1.40	--	--	--	--
	Maximum[1]	17.0	--	--	21.0	83.0	26.5
	Maximum Detect[2]	--	6.60	1.60	--	--	--
	Distribution	Normal	Normal	Not Calculated	Lognormal	Normal	Gamma
	Coefficient of Variation[1]	0.932	--	--	1.02	0.535	0.800
	CV Detects[2]	--	0.924	--	--	--	--
	UCL Type	95% Student's-t UCL	95% KM (t) UCL	Not Calculated	95% H-UCL	95% Student's-t UCL	95% Adjusted Gamma UCL
	UCL Result	7.61	2.93	Not Calculated	8.63	65.2	18.7
	UTL Type	UTL Normal	UTL KM Normal	Not Calculated	UTL Lognormal	UTL Normal	UTL Gamma WH
	UTL Result	18.4	6.97	Not Calculated	26.7	127	48.5
Survey Area B	Total Number of Observations	20	20	20	20	20	20
	Percent Non-Detects	--	--	100%	--	--	--
	Minimum[1]	1.20	0.220	--	1.00	7.70	1.21
	Minimum Detect[2]	--	--	--	--	--	--
	Mean[1]	2.70	1.75	--	4.39	50.1	6.24
	Mean Detects[2]	--	--	--	--	--	--
	Median[1]	2.00	1.00	--	3.15	36.5	4.45
	Maximum[1]	7.50	7.70	--	26.0	280	33.2
	Maximum Detect[2]	--	--	--	--	--	--
	Distribution	Gamma	Gamma	Not Calculated	Lognormal	Gamma	Gamma
	Coefficient of Variation[1]	0.651	1.05	--	1.21	1.17	1.11
	UCL Type	95% Adjusted Gamma UCL	95% Adjusted Gamma UCL	Not Calculated	95% H-UCL	95% Adjusted Gamma UCL	95% Adjusted Gamma UCL
	UCL Result	3.46	2.70	Not Calculated	6.34	73.8	8.99
	UTL Type	UTL Gamma WH	UTL Gamma WH	Not Calculated	UTL Lognormal	UTL Gamma WH	UTL Gamma WH
	UTL Result	7.59	7.83	Not Calculated	19.8	199	23.6

[1]	This statistic is reported by ProUCL when the dataset contains 100 percent detections.
[2]	This statistic is reported by ProUCL when non-detect values exist in the dataset. The value reported is calculated using detections only.
[3]	Statistics are shown for the constituents where potential outliers were identified, calculated with potential outliers removed.
CV	Coefficient of variation
KM	Kaplan Meier
mg/kg	Milligrams per kilogram
--	Not applicable
pCi/g	Picocuries per gram
WH	Wilson Hilferty
Note	The UTL result that is shown on the table is based on the output from ProUCL. ProUCL evaluates the data and provides all possible UCLs from its UCL module for three possible data distributions, then identifies a recommended UCL value. ProUCL does not identify a recommended UTL value. The UTLs are therefore based on the distribution of the recommended UCL. Please refer to *ProUCL Version 5.1 Technical Guide Statistical Software for Environmental Applications for Data Sets with and without Non-detect Observations* (EPA, 2015) for further information

3.3.2 Gamma Radiation Results Summary

Table 5 presents the descriptive statistics output from the ProUCL software for the gamma radiation survey results.

Table 5. Summary of Walk-over Gamma Results

Area	Statistic	Gamma (cpm)
Background Reference Area 1 (BG-1) All Data	Total Number of Observations	310
	Minimum	7,228
	Mean	11,990
	Median	9,936
	Maximum	36,911
	Distribution	Normal
	Coefficient of Variation	0.445
	UCL Type	95% Student's-t UCL
	UCL Result	12,490
	UTL Type	UTL Normal
	UTL Result	21,576
Background Reference Area 1 (BG-1) Excluding Potential Outliers	Total Number of Observations	281
	Minimum	7,228
	Mean	10,504
	Median	9,720
	Maximum	18,585
	Distribution	Normal
	Coefficient of Variation	0.212
	UCL Type	95% Student's-t UCL
	UCL Result	10,723
	UTL Type	UTL Normal
	UTL Result	14,523
Background Reference Area 3 (BG-3) All Data	Total Number of Observations	474
	Minimum	6,583
	Mean	9,354
	Median	9,290
	Maximum	11,726
	Distribution	Normal
	Coefficient of Variation	0.080
	UCL Type	95% Student's-t UCL
	UCL Result	9,411
	UTL Type	UTL Normal
	UTL Result	10,677
Background Reference Area 3 (BG-3) Excluding Potential Outliers	Total Number of Observations	469
	Minimum	7,429
	Mean	9,341
	Median	9,286
	Maximum	11,239
	Distribution	Normal
	Coefficient of Variation	0.076
	UCL Type	95% Student's-t UCL
	UCL Result	9,396
	UTL Type	UTL Normal
	UTL Result	10,602

Area	Statistic	Gamma (cpm)
Survey Area A	Total Number of Observations	5,399
	Minimum	5,930
	Mean	13,185
	Median	10,137
	Maximum	61,743
	Distribution	Normal
	Coefficient of Variation	0.558
	UCL Type	95% Student's-t UCL
	UCL Result	13,350
	UTL Type	UTL Normal
	UTL Result	25,543
Survey Area B	Total Number of Observations	16,295
	Minimum	6,536
	Mean	11,825
	Median	10,833
	Maximum	54,971
	Distribution	Normal
	Coefficient of Variation	0.294
	UCL Type	95% Student's-t UCL
	UCL Result	11,870
	UTL Type	UTL Normal
	UTL Result	17,612

CPM Counts per minute

As noted for metals and Ra-226 in Section 3.3.1, gamma results measured within Survey Areas appear to be elevated relative to gamma results measured in background reference areas because background reference areas were selected to represent the geology present in the region around the Site, whereas the Survey Areas were part of the mine claim because they are in an area of mineralized bedrock likely to have localized naturally elevated uranium concentrations. Therefore, it's not surprising that gamma results within the Survey Areas are somewhat higher than gamma results at the background reference areas. Elevated gamma results in portions of the Survey Areas are likely attributable to historic waste piles, as well as a higher degree of natural mineralization within the Survey Areas relative to the background reference areas. However, as noted in Section 3.2.2 and Table 3, although the maximum gamma results are higher at Survey Area A than at BG-1, the mean gamma results are not statistically different between these two areas, indicating that the amount of uranium between Survey Area A and BG-1 is similar.

4.0 INVESTIGATION LEVELS

The calculated 95-95 UTL values described in Section 3.3 are used as the ILs for gamma measurement results and soil sampling results because they reflect the natural variability in the background data, and provide an upper limit from background data to be used for single-point comparisons to Survey Area data. The ILs for analytical results of soil samples and gamma radiation results to be applied to Survey Areas A and B are based on Background Reference Areas BG-1 and BG-3, respectively.

4.1 SURVEY AREA A INVESTIGATION LEVELS

The ILs for Survey Area A are based on the results from BG-1.

- Arsenic (mg/kg): 3.83
- Molybdenum (mg/kg): 0.332
- Selenium (mg/kg): None (all results were non-detect)
- Uranium (mg/kg): 6.36
- Vanadium (mg/kg): 16.0
- Ra-226 (pCi/g): 11.8
- Gamma radiation measurements (cpm): 21,576

4.2 SURVEY AREA B INVESTIGATION LEVELS

The ILs for Survey Area B are based on all data from BG-3.

- Arsenic (mg/kg): 1.50
- Molybdenum (mg/kg): 0.367
- Selenium (mg/kg): None (all results non-detect)
- Uranium (mg/kg): 1.13
- Vanadium (mg/kg): 12.6
- Ra-226 (pCi/g): 1.77
- Gamma radiation measurements (cpm): 10,677

5.0 REFERENCES

Bain, L.J. and Engelhardt, M. (1992). *Introduction to probability and Mathematical Statistics*. Second Edition. Duxbury Press, California.

Dixon, W.J. (1953). *Processing Data for Outliers*. Biometrics 9: 74-89.

EPA, (2015). *ProUCL Version 5.1 Technical Guide Statistical Software for Environmental Applications for Data Sets with and without Nondetect Observations*. https://www.epa.gov/sites/production/files/2016-05/documents/proucl_5.1_tech-guide.pdf

Lukasz Komsta (2011). *Outliers: Tests for outliers*. R package version 0.14. https://CRAN.R-project.org/package=outliers

R Core Team (2016). *R: A language and environment for statistical computing*. R Foundation for Statistical Computing, Vienna, Austria. URL https://www.R-project.org/.

Schiffler, R.E (1998). *Maximum Z scores and outliers*. Am. Stat. 42, 1, 79-80.

H. Wickham (2009). ggplot2: *Elegant Graphics for Data Analysis*. Springer-Verlag New York.

Appendix E Cultural and Biological Resource Clearance Documents

BIOLOGICAL EVALUATION

For the Proposed:

Barton No. 3
Abandon Uranium Mine Project

Sponsored by:

MWH Global / Stantec

Prepared by:

Adkins Consulting, Inc.
180 East 12th Street, Unit 5
Durango, Colorado 81301

Revised August 2016
June 2016

TABLE OF CONTENTS

1. Introduction and Project Background 4
2. Project Description 4
2.1. Location 4
2.2. Estimated Disturbance 5
3. Affected environment 5
3.1. Proposed Project Area (PPA) 5
4. Threatened, Endangered, and Sensitive Species Evaluation 6
4.1. Methods 6
4.2. ESA-Listed Species Analysis and Results 7
4.3. NESL Species Analysis and Results 10
4.4. Migratory Bird Species 12
5. Effects Analysis 14
5.1. Direct and Indirect Effects 14
5.2. Cumulative Effects 15
6. Conclusions 15
7. Recommendations for avoidance 16
8. Supporting Information 17
8.1. Consultation and Coordination 17
8.2. Report Preparers and Certification 17
8.3. References 17

Appendix A. Maps
Appendix B. Photographs
Appendix C. Redente Plant Survey Report
Appendix D. NESL Letter

This page intentionally left blank.

1. INTRODUCTION AND PROJECT BACKGROUND

The federal Endangered Species Act (ESA) of 1973, 16 U.S.C. §1531 et seq., requires all federal departments and agencies to conserve threatened, endangered, and critical and sensitive species and the habitats on which they depend, and to consult with the U.S. Fish and Wildlife Service (USFWS) on all actions authorized, funded, or carried out by each agency to ensure that the action will not likely jeopardize the continued existence of any threatened and endangered species or adversely modify critical habitat [USFWS 1998]. This report describes the potential for federal ESA-listed species and Navajo Nation Endangered Species List (NESL) endangered, threatened, candidate, or otherwise designated sensitive flora and fauna to occur in the proposed action area. The action area with regard to the ESA is defined as any area that may be directly or indirectly impacted by the proposed action [50 CFR §402.02]. This report is intended to provide the responsible official with information to make determinations of effect on species with special conservation status.

As the result of settlement by the United States, the US established funding to address certain abandoned uranium mines located across Navajo lands. For this funding, scientific investigation of these sites is required prior to potential remediation activities in the future. MWH Global, a division of Stantec (MWH), will conduct exploratory activities at the Barton No. 3 abandoned uranium mine (AUM) such as pedestrian gamma surveys, mapping, well sampling, and surface soil sampling within the mine claim boundaries and surrounding buffer zone. Subsequent earthwork and long term monitoring may be involved after final approval by the Navajo Nation Environmental Protection Agency (NNEPA) in conjunction with the U. S. Environmental Protection Agency (USEPA).

In support of this project, MWH contracted Adkins Consulting, Inc. (ACI) to conduct surveys for ESA-listed fauna and Navajo Nation Endangered Species List (NESL) endangered, threatened, candidate, or otherwise designated sensitive fauna. MWH contracted Redente Ecological Consultants (Redente) to conduct surveys for NESL and ESA-listed plant species. The results of the 2016 Redente biological investigations will be incorporated in Sections 4.2 and 4.3 of this report and can be found in entirety attached as Appendix C.

The objectives of the biological surveys were as follows:

- To compile a list of ESA-listed or NESL species potentially occurring in the proposed action area.
- To provide a physical and biological description of the proposed action area.
- To determine the presence of ESA-listed or NESL species in the proposed action area.
- To assess potential impacts the proposed action may have on any ESA-listed or NESL species present in the area.
- To assess potential impacts to species protected under the Migratory Bird Treaty Act (MBTA).

2. PROJECT DESCRIPTION

2.1. Location

Barton No. 3 is located in Apache County Arizona, approximately 5 miles southwest of Red Mesa, AZ at an elevation of approximately 5,450 feet. Global Positioning System coordinates are 36°56'20” N by 109°26'48” W NAD 83. The site is located on Navajo Tribal Trust Lands within the Bureau of Indian Affairs (BIA) Shiprock Agency. The legal description of the project surface location is as follows: Section 21, Township 41 North, Range 27 East, Gila and Salt River Principle Meridian. Project area maps are provided in Appendix A.

2.2. Estimated Disturbance

MWH proposes a phased approach to scientific investigations at the Barton No. 3 AUM. The study area encompasses the claim boundary and a 100-foot perimeter buffer zone for a total of approximately 3.1 acres. Please refer to Appendix A for maps delineating the mine claim boundary and buffer zone.

The project will also include a walkover survey for gamma radiation across a small area known as the "background area". Please refer to Appendix A for a map of the background sample areas. A few soil samples approximately 3 inches in diameter and up to 6 inches deep will be collected by hand in these areas.

- Phase I: Spring of 2016 activity would entail pedestrian biological surveys and land surveying. Fall of 2016 work would entail pedestrian activity including gamma surveys, mapping, well sampling, and surface soil sampling. In 2016 there will be a maximum of 5 people onsite for no more than 5 to 7 days. Surface disturbance would be minimal and noise would be light.

- Phase II: Beginning in 2017, equipment including an excavator or small mobile drilling unit may be used to collect one or more soil samples. Up to 8 people may be onsite all day for a period of one week. Equipment travel would be confined to a temporary travel corridor approximately 20 feet in width. Within the travel corridor, vegetation and surface soil would sustain some disturbance but would not be bladed or bulldozed. During Phase II, noise may be moderate for a short duration, and surface disturbance will be light to moderate but confined to a minimal footprint within the study area. No permanent structures will be left on site.

3. AFFECTED ENVIRONMENT

3.1. Proposed Project Area (PPA)

The proposed project area (PPA) at Barton No. 3 includes the mine boundary and a 100-foot perimeter buffer zone for a total of approximately 3.1 acres. The affected environment or action area includes any area that may be directly or indirectly impacted by the proposed activities. Project area maps are provided in Appendix A.

3.1.1. Environmental Setting

Project activities would occur in northeastern Arizona located within the USEPA designated Arizona/New Mexico Plateau Level III Ecoregion. The Arizona/New Mexico Plateau occurs primarily in Arizona, Colorado, and New Mexico, with a small portion in Nevada. This ecoregion is approximately 45,870,500 acres, and the elevation ranges from 2,165 to 11,949 feet. The ecoregion's landscapes include low mountains, hills, mesas, foothills, irregular plains, alkaline basins, some sand dunes, and wetlands. This ecoregion is a large transitional region between the semiarid grasslands to the east, the drier shrublands and woodlands to the north, and the lower, hotter, less vegetated areas to the west and south.

Barton No. 3 is located approximately 1200 feet southwest of several residences and 1.5 miles northwest of Toh Atin Mesa. The site is comprised of open shrubland and rolling rocky terrain.

Flora

Vegetation communities found within the Arizona/New Mexico Plateau ecoregion include shrublands with big sagebrush, rabbitbrush, winterfat, shadscale saltbush, and greasewood; and grasslands of blue grama, Western wheatgrass, green needlegrass, and needle-and-thread grass. Higher elevations may support piñon pine and juniper woodlands. The Barton No. 3 site is open shrubland with mixed grasses and sparsely vegetated rocky hills.

Fauna

Wildlife or evidence of wildlife observed within or near the PPA included turkey vulture (*Cathartes aura*), common raven (*Corvus corax*), and kangaroo rat (*Dipodomys* sp.). A mound with numerous burrows characteristic of the banner-tailed kangaroo rat was observed approximately 200 feet northeast of the of the PPA boundary. Further analysis of sensitive species can be found in Section 4 of this document.

Hydrology/Wetlands

Under Executive Orders 11988 and 11990, Federal agencies are required to minimize the destruction, loss, or degradation of wetlands and floodplains, and preserve and enhance their natural and beneficial values. These habitats should be conserved through avoidance, or mitigated to ensure that there would be no net loss of wetlands function and value.

Run-off from precipitation in the project area generally drains north and northwest for 27 miles through Gothic Creek. Gothic Creek joins the San Juan River approximately 8 miles downriver (west) from Bluff, Utah. There are no wetlands, seeps, springs, or riparian areas within the proposed project area. The proposed project activities would contribute to a negligible increase in sedimentation down gradient of the project area. This increase is not anticipated to be a factor due to the distance from perennial waters. There is no suitable habitat for ESA-listed fish, nor critical habitats thereof, within 27 miles of the PPA.

Cumulative impacts to surface waters would be negligible. Surface-disturbing activities other than the proposed action that may cause accelerated erosion include, but are not limited to, construction of roads, other facilities, and installation of trenches for utilities; road maintenance such as grading or ditch-cleaning; public recreational activities; vegetation manipulation and management activities; natural and prescribed fires; and livestock grazing. Because the proposed action would have a negligible impact to downstream surface water quality, the cumulative impact also would be negligible when added to other past, present, and reasonably foreseeable activities.

4. THREATENED, ENDANGERED, AND SENSITIVE SPECIES EVALUATION

The Endangered Species Act (ESA) of 1973 requires all federal departments and agencies to conserve threatened, endangered, and critical and sensitive species and the habitats on which they depend, and to consult with the U.S. Fish and Wildlife Service (USFWS) on all actions authorized, funded, or carried out by the agency to ensure that the action will not likely jeopardize the continued existence of any threatened and endangered species or adversely modify critical habitat.

4.1. Methods

4.1.1. Off-site Methods

Prior to conducting fieldwork, ACI compiled data on animal species listed under the ESA. Informal consultation was initiated by requesting an Official Species List from the USFWS Information, Planning, and Conservation System (IPaC) website (http://ecos.fws.gov/ipac/). ACI received the Official Species List (02EAAZ00-2016-SLI-0354) on April 7, 2016. See Table 1 for USFWS-listed threatened, endangered, or candidate species with potential to occur in the PPA.

The Navajo Nation Department of Fish and Wildlife (NNDFW), Navajo Natural Heritage Program (File # 15mwh101) sent MWH a NESL information letter dated 29 December, 2015. The letter suggests biologists determine habitat suitability within the project area for the provided list of species of concern with potential to occur on the 7.5-minute quadrangles containing the project boundaries. The Navajo species of concern listed in the NESL information letter are included in Table 2.a below.

In addition to the above listed species, ACI reviewed species protected under the MBTA with potential to occur in the proposed project and action area (Table 3).

4.1.2. On-site Survey Methods

An on-site pedestrian survey was conducted in April 2016 by ACI personnel under a permit issued NNDFW. The purpose of the survey was to assess habitat potential for ESA-listed or NESL animal species. Field biologists with considerable experience identifying local wildlife species lead survey crews. The survey consisted of walking transects ten feet apart throughout the PPA including a survey buffer of approximately 50 feet beyond the PPA edge of disturbance. The surrounding areas were visually inspected with binoculars for nests, raptors, or past signs of raptor use. Weather conditions were clear and visibility was good.

Redente conducted surveys for plant species of concern. The results of the 2016 Redente biological investigations will be incorporated in Sections 4.2 and 4.3 of this report and can be found in entirety attached as Appendix C.

4.2. ESA-Listed Species Analysis and Results

4.2.1. Species from the USFWS IPaC Official Species List

Table 1 includes ESA-listed species that have the potential to occur in the project area based on the USFWS IPaC Official Species List. Biologists evaluated habitat suitability within and surrounding the PPA for the species in Table 1.

Table 1: USFWS IPaC Official Species List for the Barton No. 3 Project

Species	Status	Occurrence Within Region	Habitat	Potential to Occur within Action Area
BIRDS				
Western yellow-billed cuckoo (*Coccyzus americanus*)	Threatened	Possible rare summer/breeding occurrences.[2]	In the southwestern U.S., associated with riparian woodlands dominated by cottonwood or willow trees. In New Mexico, native or exotic species may be used.[2]	No potential. Action area does not provide suitable habitat for species to occur.
FISHES				
Roundtail chub (*Gila robusta*)	Proposed Threatened	San Juan and Mancos Rivers. Rarely encountered in recent surveys; some found from Shiprock to near Lake Powell with most between Shiprock and Aneth. [2,3]	Rocky runs, rapids, and pools of creeks and small to large rivers; also large reservoirs in the upper Colorado River system.[2]	No potential. No perennial waters in or near the PPA. Action area is within the San Juan River watershed; however, negligible effects from the project to any drainage system are expected.

Table 1: USFWS IPaC Official Species List for the Barton No. 3 Project

Species	Status	Occurrence Within Region	Habitat	Potential to Occur within Action Area
Zuni bluehead sucker (*Catostomus discobolus yarrowi*)	Endangered	Native to headwater streams of the Little Colorado River in east-central AZ and west-central NM; current range in NM is limited to the upper Río Nutria drainage.[2]	Low-velocity pools and pool-runs with seasonally dense perilithic and periphytic algae, particularly shady, cobble/boulder/bedrock substrates in streams with frequent runs and pools.[2]	No potential. Action area does not provide suitable habitat for species to occur.
MAMMALS				
Black-footed ferret (*Mustela nigripes*)	Endangered	Reintroduced into Coconino County.[1]	Open habitat, including grasslands, steppe, and shrub steppe. Closely associated with prairie dog colonies. At least 40 hectares of prairie dog colony required to support one ferret.[2]	No potential. Action area does not provide suitable habitat for species to occur--action area does not provide prairie dog colonies of sufficient size
Gray wolf (*Canus lupus*)	Proposed Experimental	In NE AZ, South of Hwy 60 in Apache, Coconino, and Navajo County; In NW NM, south of I-40 in Cibola, McKinley and Catron County.[2]	Not limited to any particular habitat type. Viable populations occur only where human population density and persecution level are low and prey densities are high. Birthing dens may be on bluffs or slopes among rocks or in enlarged badger holes. In Arizona and New Mexico, diet includes primarily elk and sometimes livestock, deer, rodents, or lagomorphs.[2]	No potential. Action area is outside of range for this species. Human activity and lack of prey base are limiting factors.
REPTILES				

Table 1: USFWS IPaC Official Species List for the Barton No. 3 Project

Species	Status	Occurrence Within Region	Habitat	Potential to Occur within Action Area
Northern Mexican gartersnake (*Thamnophis eques megalops*)	Threatened	Most of AZ; In SE NM including Catron, Grant and Hildago County [2]	Considered a riparian obligate except during dispersal behavior. Occurs chiefly in the following general habitat types: (1) Source-area wetlands [e.g., cienegas (mid-elevation wetlands with highly organic, reducing (basic, or alkaline) soils), stock tanks (small earthen impoundment), etc.]; (2) large river riparian woodlands and forests; and (3) streamside gallery forests (as defined by well-developed broadleaf deciduous riparian forests with limited, if any, herbaceous ground cover or dense grass). Occurs at elevations from 130 to 8,497 (ft).[2]	No potential. Action area does not provide suitable habitat for species to occur.
PLANTS				
Navajo sedge (*Carex specuicola*)	Threatened	From the Navajo Creek drainage in Coconino Co, east to the Tsegi Canyon Watershed in Navajo Co, south to the Rock Point/Mexican Water & Canyon de Chelly National Monument, Apache Co, AZ area. Also known from Chinle Creek, San Juan Co, UT.	Typically found in seeps and hanging gardens, on vertical sandstone cliffs and alcoves. Known populations occur from 4600ft to 7200ft.	No potential. Action area does not provide suitable habitat for species to occur. No individuals found during Redente plant investigations.[4]

[1]USFWS; [2]NatureServe Explorer; [3]Navajo Endangered Species List, Species Accounts 2008; [4]Redente 2016

4.2.2. ESA-Listed Species Eliminated From Further Consideration

Table 1 includes seven (7) ESA-listed species that have the potential to occur in the project area based on the USFWS IPaC Official Species List. All of the species in Table 1 have been eliminated from further discussion in this report because the action area does not provide suitable habitat for them to occur. There would be no direct, indirect or cumulative impacts to the species in Table 1.

4.3. NESL Species Analysis and Results

4.3.1. Navajo Endangered Species List (NESL) and Species of Concern

Table 2.a lists species of concern with potential to occur on the 7.5-minute quadrangle(s) containing the project boundaries. According to the NESL information letter received from the NNFWD found in Appendix D, there are no species known to occur within three miles of project site. Biologists evaluated the potential for species of concern listed in the table below to occur within the project area.

Additionally, the NESL information letter requested that the potential for black-footed ferret (*Mustela nigripes*) be evaluated if prairie dog towns of sufficient size (per NFWD guidelines) occur in the project area, and that potential for Parish's alkali grass (*Puccinellia parishii*) be evaluated if wetland conditions exist that contain white alkaline crusts. Species listed by the USFWS in Table 1 are not reiterated here.

Table 2.a: Navajo Endangered Species List (NESL) and Species of Concern

Species	Status	Habitat Associations	Potential to Occur in Project or Action Area
ANIMALS			
Roundtail chub (*Gila robusta*)	NESL G2	Rocky runs, rapids, and pools of creeks and small to large rivers; also large reservoirs in the upper Colorado River system. Rarely encountered in the San Juan and Mancos Rivers; they have been found from Shiprock to near Lake Powell with most between Shiprock and Aneth.[3]	No potential. No perennial waters in or near the PPA. The action area is within the San Juan River watershed; however, negligible effects from the project to any drainage system are expected.
Colorado pikeminnow (*Ptychocheilus lucius)*	NESL G2 USFWS-E	Warm-water rivers and tributaries of the Colorado River basin.[3,4] Known to occur in San Juan River from Shiprock to Lake Powel. [3,4]	No potential. No perennial waters in or near the PPA. Action area is within the San Juan River watershed; however, negligible effects from the project to any drainage system are expected.
Southwestern Willow Flycatcher (*Empidonax traillii extimus*)	NESL G2 USFWS-E	Breeds in dense riparian habitat. [3]	No potential. Action area does not provide suitable habitat for species to occur.
Mountain plover *(Charadrius montanus)*	NESL G4	Typically nests in flat (<2% slope) to slightly rolling expanses of grassland, semi-desert, or badland, in an area with short, sparse vegetation, large bare areas (often >1/3 of total area), and that is typically disturbed (e.g. grazed); may also nest in plowed or fallow cultivation fields. Nest is a scrape in dirt often next to a grass clump or old cow manure pile. Migration habitat is similar to breeding habitat.[2,3]	No potential. Action area does not provide suitable habitat for species to occur.
Golden eagle (*Aquila chrysaetos*)	NESL G3	In the west, mostly open habitats in mountainous, canyon terrain. Nests primarily on cliffs. [3]	Action area provides potential foraging habitat for species to occur.
Ferruginous hawk (*Buteo regalis*)	NESL G3	Breed in open country, usually prairies, plains and badlands; semi- desert grass-shrub, sagebrush-grass & piñon-juniper plant associations. [3]	Action area provides potential foraging habitat for species to occur.

Species	Status	Habitat Associations	Potential to Occur in Project or Action Area
Western burrowing owl (*Athene cunicularia hypugaea*)	NESL G4	Open grasslands and sometimes other open areas (such as vacant lots). Nests in abandoned burrows, such as those dug by prairie dogs. [3,4]	Burrows observed northest of the PPA boundary. No signs of use by burrowing owl.
PLANTS			
Parish's alkali grass (*Puccinellia parishii*)	NESL G4 NM-E	Alkaline springs, seeps, and seasonally wet areas that occur at the heads of drainages or on gentle slopes. Elevation: 2600-7200 feet.[2,3]	No potential. Action area does not provide suitable habitat for species to occur. No individuals found during Redente plant investigations.[5]
Rydberg's Thistle (*Cirsium rydbergii*)	NESL G4	Hanging gardens, seeps and sometimes stream banks below hanging gardens, 3300-6500 ft. [3]	No potential. Action area does not provide suitable habitat for species to occur. No individuals found during Redente plant investigations.[5]
Alcove Bog-orchid (*Platanthera zothecina*)	NESL G3	Seeps, hanging gardens, and moist stream areas from the desert shrub to pinion-juniper & Ponderosa pine/mixed conifer communities. Known populations occur between 4000 and 7200ft elevation. [3]	No potential. Action area does not provide suitable habitat for species to occur. No individuals found during Redente plant investigations.[5]
Alcove Death Camass (*Zigadenus vaginatus*)	NESL G3	Hanging gardens in seeps and alcoves, mostly on Navajo Sandstone, 3700 – 6700ft. [3]	No potential. Action area does not provide suitable habitat for species to occur. No individuals found during Redente plant investigations.[5]

Species are listed by the NESL as; Group 2: Endangered (survival or recruitment in jeopardy); Group 3: Endangered (survival or recruitment in jeopardy in foreseeable future); and Group 4: Species of Consideration. NESL Species with New Mexico State Endangered or Threatened status are labeled as NM-T or NM-E.

Sources: Sources: [1]New Mexico Natural Heritage Program 2010, [2]NatureServe Explorer; [3]Navajo Endangered Species List, Species Accounts 2008, [4] IUCN Red List, [5]Redente 2016, [6] Hammerson et al 2004.

4.3.2. NESL Species Eliminated From Further Consideration

Table 2.a includes eleven (11) NESL and Navajo Species of Concern that have the potential to occur in the project area based on the general geographical association. The following species have been eliminated from further discussion in this report because the action area does not provide suitable habitat for them to occur: Roundtail chub (*Gila robusta*), Colorado pikeminnow (*Ptychocheilus lucius),* Southwestern Willow Flycatcher (*Empidonax traillii extimus*), Mountain plover *(Charadrius montanus),* Parish's alkali grass (*Puccinellia parishii*), Rydberg's Thistle (*Cirsium rydbergii*), Alcove Bog-orchid (*Platanthera zothecina*), and Alcove Death Camass (*Zigadenus vaginatus*). None of these species were observed during surveys of the proposed project area or immediate surroundings. Critical habitats of these species do not exist within or adjacent to the proposed project area. There would be no direct, indirect or cumulative impacts to these species.

4.3.3. NESL Species Warranting Further Analysis

Table 2.b lists NESL and Navajo Species of Concern with potential to occur within the proposed project area based on habitat suitability or actual record of observation.

Table 2.b: NESL and Navajo Species of Concern Warranting Further Analysis

Species	Status	Habitat Associations	Potential to Occur in Project or Action Area
ANIMALS			
Golden eagle (*Aquila chrysaetos*)	NESL G3	In the west, mostly open habitats in mountainous, canyon terrain. Nests primarily on cliffs.[3]	Action area provides potential foraging habitat for species to occur.
Ferruginous hawk (*Buteo regalis*)	NESL G3	Breed in open country, usually prairies, plains and badlands; semi-desert grass-shrub, sagebrush-grass & piñon-juniper plant associations. [3]	Action area provides potential foraging habitat for species to occur.
Western burrowing owl (*Athene cunicularia hypugaea*),	NESL G4	Open grasslands and sometimes other open areas (such as vacant lots). Nests in abandoned burrows, such as those dug by prairie dogs. [2,3]	Burrows observed northeast of the PPA boundary. No signs of use by burrowing owl.

Species are listed by the NESL as; Group 2: Endangered (survival or recruitment in jeopardy); Group 3: Endangered (survival or recruitment in jeopardy in foreseeable future); and Group 4: Species of Consideration. NESL Species with New Mexico State Endangered or Threatened status are labeled as NM-T or NM-E.

Sources: [1]New Mexico Natural Heritage Program 2010, [2]NatureServe Explorer; [3]Navajo Endangered Species List, Species Accounts 2008, [4] IUCN Red List, [5]Redente 2016, [6] Hammerson et al 2004.

4.4. Migratory Bird Species

The Migratory Bird Treaty Act (MBTA) implements various treaties and conventions between the U.S. and Canada, Japan, Mexico and the former Soviet Union for the protection of migratory birds. Under the Act, taking, killing or possessing migratory birds is unlawful.

The bald eagle (*Haliaeetus leucocephalus*) was delisted under the ESA on August 9, 2007. Both the bald eagle and golden eagle (*Aquila chrysaetos*) are still protected under the MBTA and Bald and Golden Eagle Protection Act (BGEPA). The BGEPA affords both eagles protection in addition to that provided by the MBTA, in particular, by making it unlawful to "disturb" eagles.

In preparation for conducting the migratory bird survey, information from the New Mexico Partners In Flight website (http://www.hawksaloft.org/pif.shtml), the New Mexico PIF highest priority list of species of concern by vegetation type, the USFWS's Division of Migratory Bird Management website (http://www.fws.gov/migratorybirds/), and the 2002 Birds of Conservation Concern Report for the Southern Rockies/Colorado Plateau Bird Conservation Region (BCR) No. 16, were used to develop a list of high priority migratory bird species with potential to occur in the area of the proposed action. Species addressed previously will not be reiterated here.

Table 3: Priority Birds of Conservation Concern with Potential to Occur in the Project Area

Species Name	Habitat Associations	Potential to Occur in the Project Area
Black-throated sparrow (*Amphispiza bilineata*)	Xeric habitats dominated by open shrubs with areas of bare ground.	Suitable habitat is present within the action area for species to occur.
Brewer's sparrow (*Spizella breweri*)	Closely associated with sagebrush, preferring dense stands broken up with grassy areas.	No suitable habitat is present within the action area for species to occur.
Gray vireo (*Vireo vicinior*)	Open stands of piñon pine and Utah juniper (5,800 – 7,200 ft) with a shrub component and mostly bare ground; antelope bitterbrush, mountain mahogany, Utah serviceberry and big sagebrush often present. Broad, flat or gently sloped canyons, in areas with rock	No suitable habitat is present within the action area for species to occur.

	outcroppings, or near ridge-tops.	
Loggerhead shrike (*Lanius ludovicianus*)	Open country interspersed with improved pastures, grasslands, and hayfields. Nests in sagebrush areas, desert scrub, and woodland edges.	No suitable habitat is present within the action area for species to occur.
Mountain bluebird (*Sialia currucoides*)	Open piñon-juniper woodlands, mountain meadows, and sagebrush shrublands; requires larger trees and snags for cavity nesting.	No suitable habitat is present within the action area for species to occur.
Mourning dove (*Zenaida macroura*)	Open country, scattered trees, and woodland edges. Feeds on ground in grasslands and agricultural fields. Roost in woodlands in the winter. Nests in trees or on ground.	No suitable habitat is present within the action area for species to occur.
Sage sparrow (*Amphispiza belli*)	Large and contiguous areas of tall and dense sagebrush. Negatively associated with seral mosaics and patchy shrublands and abundance of greasewood.	No suitable habitat is present within the action area for species to occur.
Sage thrasher (*Oreoscoptes montanus*)	Shrub-steppe dominated by big sagebrush.	Marginal habitat is present within the action area for species to occur. Lack of significant sagebrush shrubland likely a limiting factor.
Scaled quail (*Callipepla squamata*)	Brushy arroyos, cactus flats, sagebrush or mesquite plains, desert grasslands, Plains grasslands, and agricultural areas. Good breeding habitat has a diverse grass composition, with varied forbs and scattered shrubs.	No suitable habitat present within the action area for species to occur. Lack of diverse grass composition with varied forbs likely a limiting factor.
Swainson's hawk (*Buteo swainsoni*)	A mixture of grassland, cropland, and shrub vegetation; nests on utility poles and in isolated trees in rangeland. Nest densities higher in agricultural areas.	Marginal habitat is present within the action area for species to occur.
Vesper sparrow (*Pooecetes gramineus*)	Dry montane meadows, grasslands, prairie, and sagebrush steppe with grass component; nests on ground at base of grass clumps.	No suitable habitat present within the action area for species to occur. Lack of significant grassland/prairie component a limiting factor.
Bald eagle (*Haliaeetus leucocephalus*)	Near lakes, rivers and cottonwood galleries. Nests near surface water in large trees. May forage terrestrially in winter	No suitable habitat present within the action area for species to occur.
Bendire's thrasher (*Toxostoma bendirei*)	Typically inhabits sparse desert shrubland & open woodland with scattered shrubs; breeds in scattered locations in AZ, central & western portions of NM; most common in southwest NM.	Suitable habitat is present within the action area for species to occur.
Piñon jay (*Gymnorhinus cyanocephalus*)	Foothills throughout CO and NM wherever large blocks of piñon-juniper woodland habitat occurs.	No suitable habitat present within the action area for species to occur.
Prairie falcon (*Falco mexicanus*)	Arid, open country, grasslands or desert scrub, rangeland; nests on cliff ledges, trees, power structures.	Action area provides potential foraging habitat for species to occur.
American peregrine falcon (*Falco peregrinus*)	Nest in ledges or potholes on cliffs in wooded/forested habitats; Forage over riparian woodlands, coniferous & deciduous forests, shrublands, prairies. [3]	No suitable habitat present within the action area for species to occur.

5. EFFECTS ANALYSIS

Effects or impacts can be either long term (permanent or residual) or short term (incidental or temporary). Short-term impacts affect the environment for only a limited period and then the environment reverts rapidly back to pre-action conditions. Long-term impacts are substantial and permanent alterations to the pre-existing environmental condition. Direct effects are those effects that are caused by the action and occur in the same time and place as the action. Indirect effects are those effects that are caused by or will result from the proposed action and are later in time but still reasonably certain to occur [USFWS 1998].

5.1. Direct and Indirect Effects

The PPA at Barton No. 3 includes the ERT mine boundary and a 100-foot perimeter buffer zone for a total of approximately 3.1 acres. The project will also include a walkover survey for gamma radiation across a small area known as the “background area” (see Appendix A for map). A few soil samples approximately 3 inches in diameter and up to 6 inches deep will be collected by hand in these areas. The proposed action would result in a short term increase in human activity within the PPA at varying degrees depending on the project phase:

- Phase I: Spring of 2016 activity would entail pedestrian biological surveys and land surveying. During 2016, work would entail pedestrian activity including gamma surveys, mapping, well sampling, and surface soil sampling. For this phase, there will be a maximum of 5 people onsite for no more than 5 to 7 days. Surface disturbance would be minimal and noise would be light.

- Phase II: Beginning in 2017, equipment including an excavator or small mobile drilling unit may be used to collect one or more soil samples. Up to 8 people may be onsite all day for a period of one week. Equipment travel would be confined to a temporary travel corridor approximately 20 feet in width. Within the travel corridor, vegetation and surface soil would sustain some disturbance but would not be bladed or bulldozed. During Phase II, noise may be moderate for a short duration, and surface disturbance will be light to moderate but confined to a minimal footprint within the study area. No permanent structures will be left on site.

Best Management Practices (BMPs) incorporated into project design will reduce potential impacts including: confining equipment travel to PPA boundary, minimizing travel corridors as much as practicable, limiting truck and equipment travel within the PPA when surfaces are wet and soil may become deeply rutted, and using previously disturbed areas for travel when possible.

5.1.1. Golden eagle, Ferruginous hawk

Due to the mobility of adult raptors and the lack of appropriate nesting sites in the vicinity of the proposed project area, it is unlikely that the proposed project would result in 1) injury to a raptor, 2) a decrease in its productivity, by substantially interfering with normal breeding, feeding, or sheltering behavior, or 3) nest abandonment, by substantially interfering with normal breeding, feeding, or sheltering behavior. Short term audial and visual disturbances associated with the Phase II activity could cause minor indirect habitat loss by temporarily deterring raptors from using available habitat adjacent to the proposed project area.

5.1.2. Western Burrowing Owl

ACI biologists determined the open gently sloping areas in and surrounding the PPA to be potential habitat for western burrowing owl. During the April 2016 survey of the PPA, surveyors observed a kangaroo rat mound approximately 200 feet northeast of the project area boundary. Surveyors did not observe any signs of use by burrowing owl within or surrounding the burrows. With the implementation of BMPs discussed in Section 5.1, no impacts are expected to this species.

5.1.3. Migratory Birds

The PPA encompasses approximately 3.1 acres of potential migratory bird habitat in the form of Great Basin Desert scrub. No trees would be removed as a result of the proposed project.

Phase I:
Noise and surface disturbance will be low during pedestrian survey activity. Adult migratory birds would not be directly impacted by Phase I because of their mobility and ability to avoid areas of human activity. Minor human presence during project activities within the breeding season may indirectly disturb or displace adults from nests and foraging habitats for a short period of time. Direct and indirect effects are expected to be short term and minor.

Phase II:
Adult migratory birds would not be directly harmed by the activities because of their mobility and ability to avoid areas of human activity. During Phase II, noise may be moderate but for a short duration, and surface disturbance will be light to moderate but confined to a minimal footprint within the study area. No permanent structures will be left on site. Direct impacts are more likely if surface disturbing activities occur during the breeding season (April 1 through August 15); however, surface disturbance will be confined to a minimal footprint (likely less than one acre) within the study area. The increased human presence during project activities within the breeding season may indirectly disturb or displace adults from nests and foraging habitats for a short period of time.

5.2. Cumulative Effects

Cumulative impacts of an action include the total effects on a resource or ecosystem. Cumulative effects in the context of the Endangered Species Act pertain to non-Federal actions, and are reasonably certain to occur in the action area [USFWS 1998].

5.2.1. Golden eagle, Ferruginous hawk

Additional existing surface disturbances within the action area include unimproved access roads to the residences nearby, all-terrain vehicle use and active wildlife and livestock grazing. Local plant and animal pest control are also activities that may occur in the vicinity. These foreseeable actions would cumulatively impact raptors through habitat loss or contamination. Human activity may also increase available prey base if the activity leads to an increase in rodent population numbers. The intensity of indirect effects would be dependent upon the species, its life history, time of year and/or day and the type and level of human and vehicular activity is occurring.

5.2.2. Western Burrowing Owl

The potential habitat is not currently occupied by this species. With the implementation of BMPs discussed in Section 5.1, no direct or indirect impacts, and therefore no cumulative impacts, are expected from the proposed action.

5.2.3. Migratory Birds

With the implementation of BMPs discussed in Section 5.1, the cumulative impact of the proposed action on migratory birds would be low based on the minimal surface disturbance involved and the availability of adjacent similar habitats.

6. CONCLUSIONS

U.S. Fish and Wildlife Service Listed Species (USFWS)

ACI conducted informal consultation with the USFWS and received an Official Species List for the proposed project area. Qualified ACI biologists evaluated habitat suitability within and surrounding the

PPA for these species and concluded the potential does not exist for USFWS-listed species to occur within the proposed project area. No further consultation with the USFWS is required.

Migratory Birds

The proposed action phases would result in varying degrees of noise and surface disturbance within approximately 3.1 acres of potential migratory bird habitat in the form of Great Basin Desert scrub. During Phase I, noise and surface disturbance will be low during pedestrian survey activity. Direct and indirect effects are expected to be short term and negligible. For Phase II, the total surface disturbance is unknown at this point; however equipment movement would be confined to only a few temporary travel corridors. Within the travel corridors, vegetation and surface soil would sustain some disturbance but would not be bladed or bulldozed. Possible direct impacts would be short term and are more likely if surface disturbing activities occur during the breeding season (April 1 through August 15). Effects to potential habitat for migratory birds is anticipated to be minor and short term due to the limited degree of vegetation and soil disruption and the abundance of adjacent habitat for these species.

Wetlands

Under Executive Orders 11988 and 11990, Federal agencies are required to minimize the destruction, loss, or degradation of wetlands and floodplains, and preserve and enhance their natural and beneficial values. These habitats should be conserved through avoidance, or mitigated to ensure that there would be no net loss of wetlands function and value. No impacts to wetlands are anticipated. The proposed project activities would contribute to a negligible increase in sedimentation down gradient of the project area. This increase is not anticipated to be a factor due to the distance from perennial waters. There is no suitable habitat for ESA-listed fish, nor critical habitats thereof, within greater than 20 miles of the PPA.

Navajo Endangered Species List (NESL) and Species of Concern

Three (3) NESL and Navajo species of concern have potential to occur within or near the PPA based on habitat suitability or actual record of observation. Based on site surveys, ACI determined the PPA contains potential foraging habitat for golden eagle and ferruginous hawk. Additionally, ACI observed a kangaroo rat mound northest of the PPA boundary. The burrows are not currently used by burrowing owl and are not likely to be used in the near future as they appear to be actively in use by some other animal.

Potential effects to these species are discussed in detail in Section 5 above. The short term increase in human activity and ground disturbance associated with Phase II of the project would have a negligible impact on these species provided recommendations discussed in Section 7 below are implemented.

7. RECOMMENDATIONS FOR AVOIDANCE

ACI recommends that the proponent implement standard Best Management Practices (BMPs) designed to protect sensitive wildlife species during project activity including: confining equipment travel to PPA boundary, minimizing travel corridors as much as practicable, limiting truck and equipment travel within the PPA when surfaces are wet and soil may become deeply rutted, and using previously disturbed areas for travel when possible.

8. SUPPORTING INFORMATION

8.1. Consultation and Coordination

John Nystedt, Fish and Wildlife Biologist/AESO Tribal Coordinator
USFWS AZ Ecological Services Office - Flagstaff Suboffice
Southwest Forest Science Complex, 2500 S Pine Knoll Dr, Rm 232
Flagstaff, AZ 86001

Pam Kyselka, Project Reviewer and
Chad Smith, Zoologist
Navajo Nation Department of Fish and Wildlife
Natural Heritage Program
PO Box 1480
Window Rock, AZ 86515

8.2. Report Preparers and Certification

Adkins Consulting, Inc.
180 E. 12th Street, Unit 5
Durango, Colorado 81301
Lori Gregory, Biologist; Sarah McCloskey, Field Biologist; Arnold Clifford, Lead Field Biologist

It is believed by Adkins Consulting that the proposed action would not violate any of the provisions of the Endangered Species Act of 1973, as amended. Conclusions are based on actual field examination and are correct to the best of my knowledge.

10 June 2016

_____ _____

Lori Gregory
Wildlife Biologist
Adkins Consulting
505.787.4088

Date

8.3. References

Code of Federal Regulations (CFR). Interagency Cooperation - 50 CFR §402 (June 3, 1986). U.S. Government Publishing Office Electronic Code of Federal Regulations. 732 North Capitol Street, NW, Washington, DC. Retrieved from: https://www.gpo.gov/fdsys/search/home.action.

Hammerson, Geoffrey, Frank Solís, Roberto Ibáñez, César Jaramillo, Querube Fuenmayor. 2004. *Lithobates pipiens*. The IUCN Red List of Threatened Species 2004: e.T58695A11814172. http://dx.doi.org/10.2305/IUCN.UK.2004.RLTS.T58695A11814172.en. Downloaded on 10 June 2016.

Heil, Kenneth D. 2000. *Four Corners Invasive and Poisonous Plant Field Guide.* Bureau of Land Management (BLM), Farmington District, and San Juan College, Farmington, New Mexico.

NatureServe. 2015. NatureServe Explorer: An online encyclopedia of life [web application]. Version 7.1. NatureServe, Arlington, Virginia. Available http://explorer.natureserve.org. (Accessed: June 9, 2016).

Navajo Nation Division of Natural Resources, Department of Fish and Wildlife. 2008a. *Navajo Endangered Species List (NESL)*. Resources Committee Resolution No. RCS-41-08. Window Rock, AZ.

Navajo Nation Division of Natural Resources, Department of Fish and Wildlife. 2008b. *Navajo Endangered Species List (NESL) Species Accounts.* Retrieved from: http://www.nndfw.org/nnhp/species_acct.pdf

New Mexico Department of Game and Fish. *BISON-M (Biota Information System of New Mexico).* Available at: http://www.bison-m.org.

New Mexico Natural Heritage Program. 2006. The website of Natural Heritage New Mexico: An online resource. Version 2.0. Albuquerque, New Mexico, USA: University of New Mexico. http://nmnhp.unm.edu.

New Mexico Rare Plant Technical Council. 1999. *New Mexico Rare Plants*. Albuquerque, NM: New Mexico Rare Plants Home Page. http://nmrareplants.unm.edu.

Prall, Dexter . 2015. Navajo Endangered Species List (NESL) Information letter to Eileen Dornfest, MWH Global (File# 15mwh101). Navajo Nation Department of Fish and Wildlife, Natural Heritage Program, Window Rock, AZ.

U.S. Department of Agriculture, Natural Resources Conservation Service (NRCS). 2006. Web Soil Survey. Version 1.1. NRCS. http://websoilsurvey.nrcs.usda.gov/app.

U.S. Fish and Wildlife Service (USFWS), Endangered Species Program. Information, Protection, and Conservation (iPaC). http://ecos.fws.gov/ipac/. Official Species List (02EAAZ00-2016-SLI-0354) dated April 7, 2016

U.S. Fish and Wildlife Service (USFWS) 1998. Final Endangered Species Act (ESA) Section 7 Consultation Handbook, March 1998. https://www.fws.gov/endangered/esa-library/pdf/esa_section7_handbook.pdf

U.S. Fish and Wildlife Service. 2008. *Wetlands Online Mapper.* National Wetlands Inventory (NWI). http://wetlandsfws.er.usgs.gov/wtlnds/launch.html.

APPENDIX A. MAPS

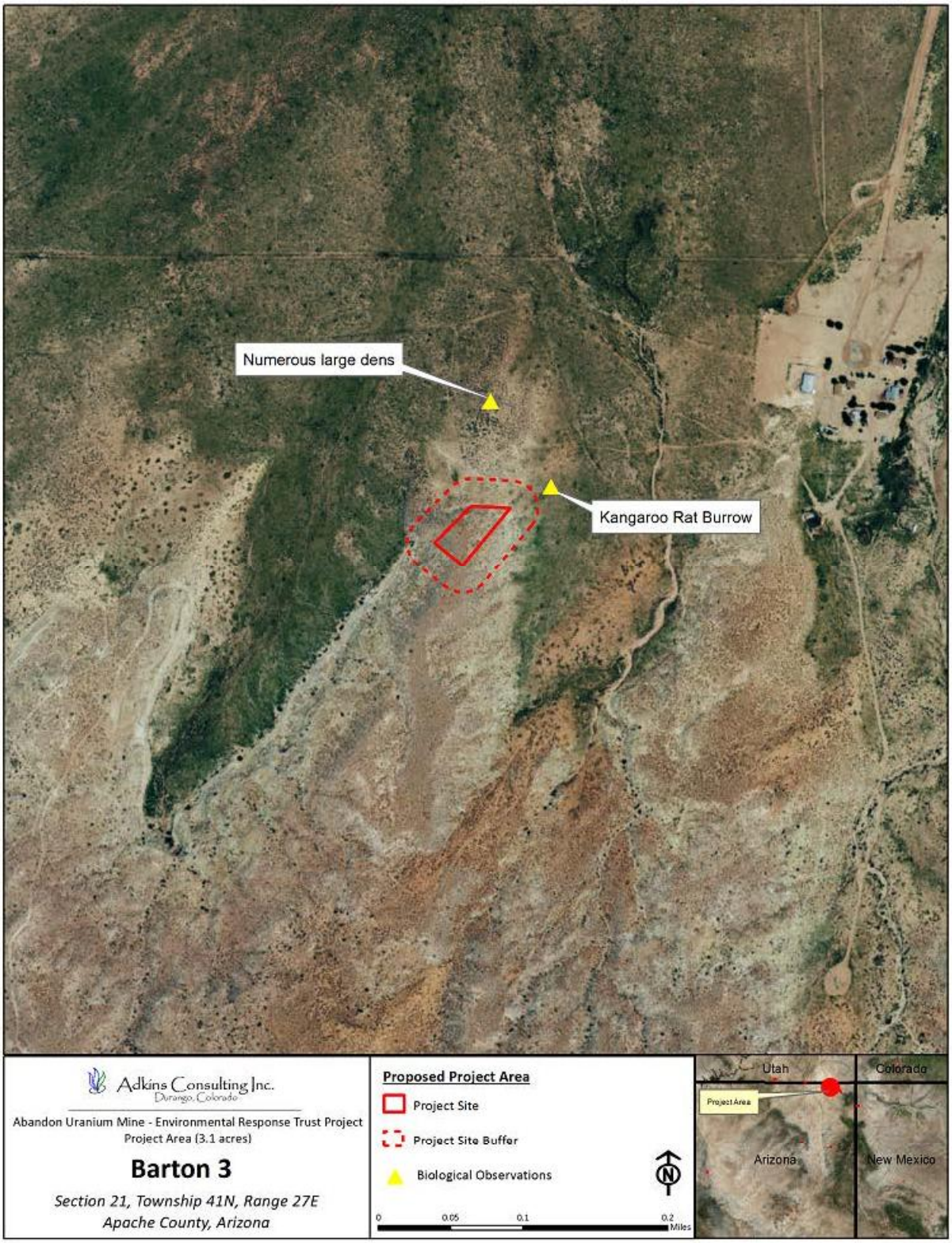

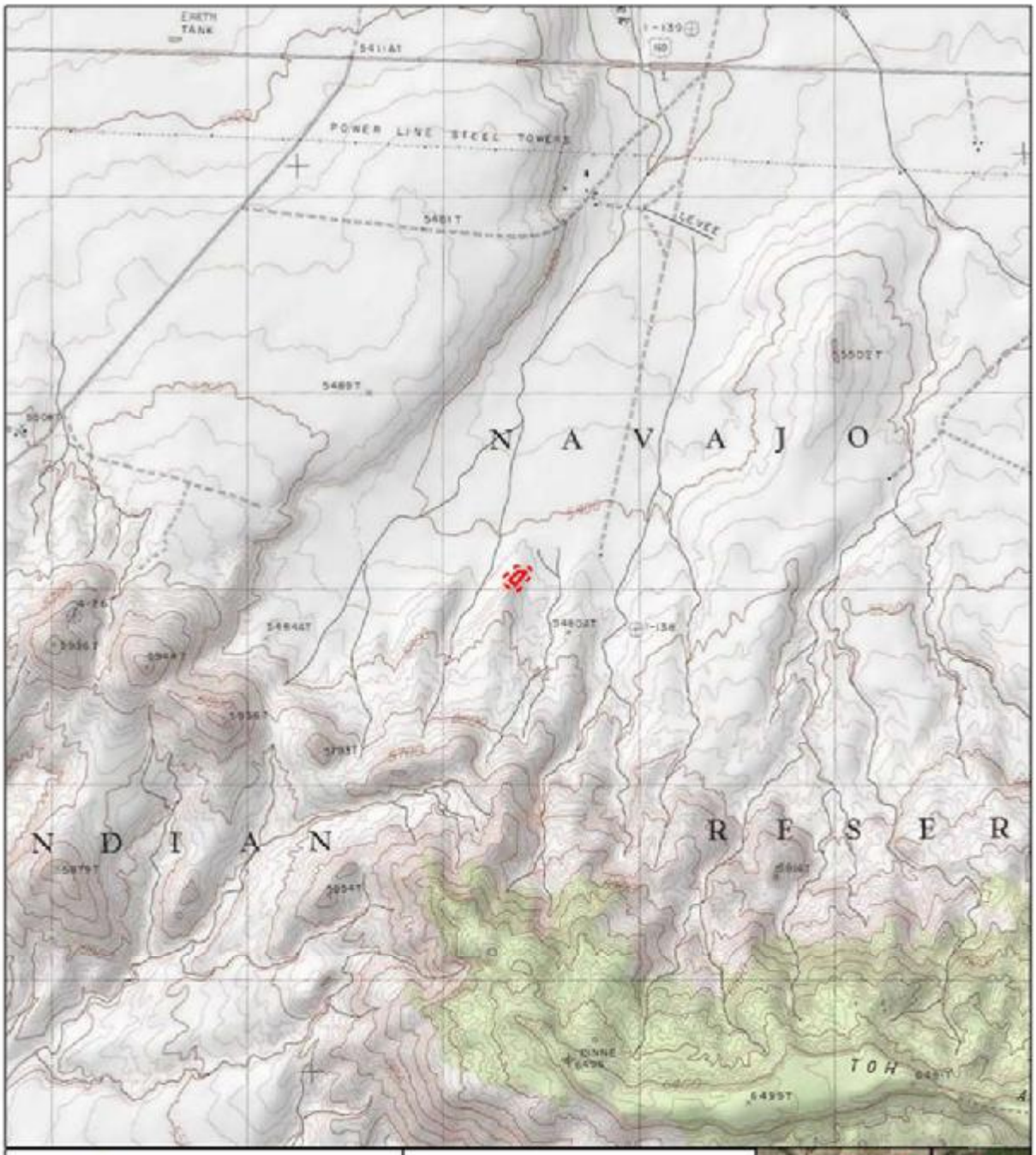

Adkins Consulting Inc.
Durango, Colorado

Abandon Uranium Mine - Environmental Response Trust Project
Project Area (3.1 acres)

Barton 3

Section 21, Township 41N, Range 27E
Apache County, Arizona

Proposed Project Area

Project Site

Project Site Buffer

0 0.25 0.5 1 Miles

APPENDIX B. PHOTOGRAPHS

Looking north from south side of PPA

View south of west side of PPA

Top of site looking southwest

Kangaroo rat mound

APPENDIX C. REDENTE PLANT SURVEY REPORT

Navajo Nation AUM Environmental Response Trust

Plant Survey Report for Species of Concern At Barton 3 Project Site Apache County, Arizona August 2016

Prepared by:
Redente Ecological Consultants
1322 Alene Circle
Fort Collins, CO 80525

Table of Contents

INTRODUCTION 1
Purpose of Report 1
Site Location 1
Environmental Setting 1
Climate 1
Soils 1
Plant Community Type 2
REGULATORY SETTING 2
METHODS 3
Study Area 3
Database Queries and Literature Review 3
Rare Plant Survey Protocols 3
2016 Field Survey 4
RESULTS 4
REFERENCES 6
LIST OF PREPARERS 7

INTRODUCTION

Purpose of Report

A biological survey was conducted at the Barton 3 site as part of the Navajo Nation AUM Environmental Response Trust Project. The purpose of the survey is to determine if plant species of concern are present within the claim boundary and extending 100 feet around the site. Biological clearance is required at each site prior to any site investigation to determine if the project may affect potential species-of-concern or potential federal threatened and endangered (T&Es) species and/or critical habitat.

Site Location

Barton 3 is located in Apache County Arizona, approximately 138 km (86 miles) west of Farmington, New Mexico at an elevation of approximately 1,668 m (5,472 ft). Global Positioning System coordinates are 36º 56' 21" N by 109º 26' 48" W (North American Datum of 1983). The site is located on Tribal Trust Land (TTL).

Environmental Setting

Climate

The climate of the Barton 3 site is classified as arid, with an average annual precipitation of 203 mm (8 in) with the greatest precipitation months occurring in July and August. Average annual temperature is 13.3º C (56º F).

Soils

The U.S. Department of Agriculture (USDA) Soil Survey of the Shiprock Area, Parts of San Juan County, New Mexico and Apache County, Arizona was published in 2001 in cooperation with the Bureau of Indian Affairs. This area of Apache County is mainly escarpments separated by terraces and riverwashes. The general mapping unit for the area is Piute-BlueChief-Rock Outcrop (USDA 2001). Rock outcrops consist of exposed sandstone bedrock occurring as small areas of short irregular ledges intermingled with Piute soil. The Piute soil is a gravelly loamy fine sand with slopes ranging from 2 to 25%.

Plant Community Type

The vegetation on the Barton 3 site is part of the Colorado Plateau Shrub-Grassland type (USDA 2001). The most common species on the site include cliffrose (*Purshia stansburiana*), broom snakeweed (*Gutierrizia sarathrae*), green rabbitbrush (*Ericameria teretifolia*), Mormon tea (*Ephedra viridis*), Bigelow sagebrush (*Artemisia bigelovi*), black grama (*Bouteloua eriopoda*), galleta (*Pleuraphis jamesii*), and Indian ricegrass (*Achnatherum hymenoides*).

Land Use

The land type on the Barton 3 site is rangeland and the principal land uses are livestock grazing and wildlife habitat.

REGULATORY SETTING

The survey for vegetation species-of-concern was conducted according to the Navajo Natural Heritage Program (NNHP) guidelines and the Endangered Species Act (ESA), including the procedures set forth in the *Biological Resource Land Use Clearance Policies and Procedures* (RCP), RCS-44-08 (NNDFW 2008), the Species Accounts document (NNHP 2008), and the USFWS survey protocols and recommendations. Data requests for species of concern were submitted to the NNHP and for federal T&E species to the USFWS. NNHP responded to the request for species of concern with a letter to MWH dated 19 November 2015. The letter provided a list of species of concern known to occur within the proximity of the project area. The list of species included their status as either NESL (Navajo Endangered Species List), Federally Endangered, Federally Threatened, or Federal Candidate. Species were further classified as G2, G3 or G4. G2 includes endangered species or subspecies whose prospects of survival or recruitment are in jeopardy. G3 includes endangered species or subspecies whose prospects of survival or recruitment are likely to be in jeopardy in the foreseeable future. G4 are “candidates” and includes those species or subspecies which may be endangered but for which we lack sufficient information to support being listed.

The Navajo Natural Heritage Program identified four endangered plant species that may occur in the project area— Alcove death camas (*Zigadenus vaginatus*), Alcove bog-orchid (*Platanthera zothecina*), Rydberg's thistle (*Cirsium rydbergii*), and Navajo sedge (*Carex specuicola*). The USFWS also listed Navajo sedge as a threatened species that may occur in the area.

METHODS

Study Area

The area evaluated for plant species of concern was defined by the claim boundary, with an additional 100 foot buffer around all sides.

Database Queries and Literature Review

Prior to initiating field surveys, a target list of all potentially occurring species of concern identified by NNHP and the USFWS was compiled. Ecologic and taxonomic information was reviewed for each species prior to initiating field work to better understand ecological characteristics of the species, habitat requirements and key taxonomic indicators for proper identification (ANPS 2000).

Rare Plant Survey Protocols

The plant survey followed currently accepted resource agency protocols and guidelines, for conducting and reporting botanical inventories for special status plant species (USFWS 1996). According to these protocols, rare plant surveys were conducted by botanists with considerable experience with the local flora. All species observed during the surveys were identified to the degree necessary to correctly identify the species and determine if the plant had special status. The survey was conducted in the summer (July) of 2016 during the appropriate season to observe the phenological characteristics of the special status plant species that were necessary for identification.

The botanical survey team was assisted during the survey by GIS trained staff from MWH with training specifically in the use of a Garmin Montana 600. The GPS operator was also instructed in sight identification of species of concern to help delineate points or polygons

and other data collection and data management tasks. GPS units were preloaded for the plant team with background and data files that showed the aerial photographic base map, the site boundaries, and the study area, so team members could clearly identify their exact location in the field at all times.

2016 Field Survey

The project site was surveyed by a field botanist. The botanist walked meandering "transect" lines through each area and looked for suitable habitat for these species, such as seeps and hanging gardens for *Cirsium rydbergii, Platanthera zothecina, Zigadenus vaginatus*, and *Carex specuicola*. The most emphasis was placed in areas with suitable habitat for the species of concern. If a species of concern was identified, the location would be recorded using the point or polygon feature in the GPS units. Further, the population size was planned to be obtained either by direct counts, estimations, or by sampling the population.

Field botanists documented every field visit on field forms, by area, and took photographs of field conditions and species of concern, if found on site. The botanist also recorded all plant communities and plant species observed during each field visit. Plant community types were also photographed to document site conditions (Photos #1 and #2).

RESULTS

A total of four plant species of concern were identified as potentially occurring within the proximity of the project area. These species included *Zigadenus vaginatus Platanthera zothecina*, *Cirsium rydbergii*, and *Carex specuicola*.

Zigadenus vaginatus is a native perennial forb that grows in hanging gardens in seeps and alcoves, mostly on Navajo sandstone. This species is endemic to the Colorado Plateau in southern Utah and northern Arizona at elevations between 1,127 and 2,042 m (3,698 and 6,999 ft). *Platanthera zothecina* is a native perennial forb that grows in seeps, hanging gardens and moist stream areas from the desert shrub to the Pinyon-Juniper communities. This species is found in New Mexico, Utah and Arizona at elevations between 1,220 and 2,195 m (4,003 and 7,201 ft). *Cirsium rydbergii* is a native perennial

forb that occurs in hanging gardens, seeps and stream banks below hanging gardens at elevations between 1,005 and 1,980 m (3,297 and 6,946 ft). Its distribution includes southern San Juan County along with Coconino and Apache Counties in Arizona. *Carex specuicola* is a native perennial grass-like plant that grows in seeps and hanging gardens primarily on sandstone cliffs and alcoves. Known populations occur at elevations between 1,402 and 2,195 m (4,600 and 7,201 ft) in San Juan County and northern Arizona.

The survey at Barton 3 on July 21, 2016 did not identify any of the four species that have been listed as potential species of concern for this site. These four species occur in seeps, alcoves or hanging gardens that were not found on the site.

Photo #1—Overview of general landscape and plant community at Barton 3.

Photo #2—Overview of general landscape and plant community at Barton 3.

REFERENCES

ANPS. 2000. Arizona Rare Plant Field Guide. U.S. Government Printing Office. Washington, D.C.

Navajo Nation Department of Fish and Wildlife (NNDFW), 2008. Biological Resource Land Use Clearance Policies and Procedures, RCS-44-08. September 10.

Navajo Natural Heritage Program (NNHP), 2008. *Species Accounts*, Navajo Nation Endangered Species List, version 3.08.

USDA. 2001. Soil Survey of Shiprock Area, Parts of San Juan County, New Mexico and Apache County, Arizona. USDA, Natural Resource Conservation Service in cooperation with USDI Bureau of Indian Affairs. Washington, D.C.

USFWS. 1996. Guidelines for Conducting and Reporting Botanical Inventories for Federally Listed, Proposed, and Candidate Plants. Sacramento Fish and Wildlife Office, Sacramento, California.

LIST OF PREPARERS

Redente, Edward F. Plant Ecologist. B.A., M.S. and Ph.D. Over 40 years of experience in plant ecology and plant survey studies throughout the semi-arid and arid western U.S. Author or Co-author of over 200 publications.

APPENDIX D. NESL LETTER

NNHP
Navajo Natural Heritage Program

PO Box 1480
Window Rock, AZ
86515

P 928.871.6472
F 928.871.7603

http://nnhp.nndfw.org

15mwh101

19-November-2015

Eileen Dornfest - Project Manager
MWH Americas
3665 John F Kennedy Parkway
Bldg 1, Suite 206
Ft. Collins, CO 80525

SUBJECT: Navajo Nation AUM Environmental Response Trust (ERT) Project - 16 Abandoned Uranium Mine (AUM) Sites

Eileen Dornfest,

NNHP has performed an analysis of your project in comparison to known biological resources of the Navajo Nation and has included the findings in this letter. The letter is composed of seven parts. The sections as they appear in the letter are:

1. **Known Species** – a list of all species within relative proximity to the project
2. **Potential Species** – a list of potential species based on project proximity to respective suitable habitat
3. **Quadrangles** – an exhaustive list of quads containing the project
4. **Project Summary** – a categorized list of biological resources within relative proximity to the project grouped by individual project site(s) or quads
5. **Conditional Criteria Notes** – additional details concerning various species, habitat, etc.
6. **Personnel Contacts** – a list of employee contacts
7. **Resources** – identifies sources for further information

Known Species lists "species of concern" known to occur within proximity to the project area. Planning for avoidance of these species is expected. If no species are displayed then based upon the records of the Navajo Nation Department of Fish and Wildlife (NNDFW) there are no "species of concern" within proximity to the project. Refer to the Navajo Endangered Species List (NESL) Species Accounts for recommended avoidance measures, biology, and distribution of NESL species on the Navajo Nation (http://nnhp.nndfw.org/sp_account.htm).

Potential Species lists species that are potentially within proximity to the project area and need to be evaluated for presence/absence. If no species are found within the Known or Potential Species lists, the project is not expected to affect any federally listed species, nor significantly impact any tribally listed species or other species of concern. Potential for species has been determined primarily on habitat characteristics and species range information. A thorough habitat analysis, and if necessary, species specific surveys, are required to determine the potential for each species.

Species of concern include protected, candidate, and other rare or otherwise sensitive species, including certain native species and species of economic or cultural significance. For legally protected species, the following tribal and federal statuses are indicated: NESL, federal Endangered Species Act (ESA), Migratory

Bird Treaty Act (MBTA), and Eagle Protection Act (EPA). No legal protection is afforded species with only ESA candidate, NESL group 4 status, and species listed on the Sensitive Species List. Please be aware of these species during surveys and inform the NNDFW of observations. Reported observations of these species and documenting them in project planning and management is important for conservation and may contribute to ensuring they will not be up listed in the future.

In any and all correspondence with NNDFW or NNHP concerning this project please cite the Data Request Code associated with this document. It can be found in this report on the top right corner of the every page. Additionally please cite this code in any biological evaluation documents returned to our office.

1. Known Species *(NESL=Navajo Endangered Species List, FE=Federally Endangered, FT=Federally Threatened, FC=Federal Candidate)*

Species

AMPE = Amsonia peeblesii / Peebles' Blue-star NESL G4
AQCH = Aquila chrysaetos / Golden Eagle NESL G3
CASP = Carex specuicola / Navajo Sedge NESL G3 FT
LIPI = Lithobates pipiens / Northern Leopard Frog NESL G2
PEAMCI = Perognathus amplus cineris / Wupatki Pocket Mouse NESL G4
PUPA = Puccinellia parishii / Parish's Alkali Grass NESL G4

**All or parts of this project currently are within areas protected by the Golden and Bald Eagle Nest Protection Regulations; consult with NNDFW zoologist or EA Reviewer for more information and recommendations.

2. Potential Species

Species

ALGO = Allium gooddingii / Gooding's Onion NESL G3
AMPE = Amsonia peeblesii / Peebles' Blue-star NESL G4
AQCH = Aquila chrysaetos / Golden Eagle NESL G3
ASBE = Astragalus beathii / Beath Milk-vetch NESL G4
ASNA = Astragalus naturitensis / Naturita Milk-vetch NESL G3
ASWE = Asclepias welshii / Welsh's Milkweed NESL G3 FT
ATCU = Athene cunicularia / Burrowing Owl NESL G4
BURE = Buteo regalis / Ferruginous Hawk NESL G3
CASP = Carex specuicola / Navajo Sedge NESL G3 FT
CHMO = Charadrius montanus / Mountain Plover NESL G4
CIME = Cinclus mexicanus / American Dipper NESL G3
CIRY = Cirsium rydbergii / Rydberg's Thistle NESL G4
CYUT = Cystopteris utahensis / Utah Bladder-fern NESL G4
EMTREX = Empidonax traillii extimus / Southwestern Willow Flycatcher NESL G2 FE
ERAC = Erigeron acomanus / Acoma Fleabane NESL G3
ERRH = Erigeron rhizomatus / Rhizome Fleabane/zuni Fleabane NESL G2 FT
ERRO = Errazurizia rotundata / Round Dunebroom NESL G3
ERSI = Erigeron sivinskii / Sivinski's Fleabane NESL G4
FAPE = Falco peregrinus / Peregrine Falcon NESL G4
GIRO = Gila robusta / Roundtail Chub NESL G2
LENA = Lesquerella navajoensis / Navajo Bladderpod NESL G3
LIPI = Lithobates pipiens / Northern Leopard Frog NESL G2
MUNI = Mustela nigripes / Black-footed Ferret NESL G2 FE

PEAMCI = Perognathus amplus cineris / Wupatki Pocket Mouse NESL G4
PLZO = Platanthera zothecina / Aloove Bog-orchid NESL G3
PRSP = Primula specuicola / Cave Primrose NESL G4
PTLU = Ptchocheilus lucius / Colorado Pikeminnow NESL G2
PUPA = Puccinellia parishii / Parish's Alkali Grass NESL G4
SAPAER = Salvia pachyphylla ssp eremopictus / Arizona Rose Sage NESL G4
STOCLU = Strix occidentalis lucida / Mexican Spotted Owl NESL G3 FT
VUMA = Vulpes macrotis / Kit Fox NESL G4
ZIVA = Zigadenus vaginatus / Aloove Death Camass NESL G3

3. Quadrangles (7.5 Minute)

Quadrangles

Cameron SE (35111-G3) / AZ
Dalton Pass (35108-F3) / NM
Del Muerto (36109-B4) / AZ
Dos Lomas (35107-C7) / NM
Gallup East (35108-E6) / NM
Garnet Ridge (36109-H7) / AZ, UT
Horse Mesa (36109-F1) / AZ, NM
Indian Wells (35110-D1) / AZ
Mexican Hat SE (37109-A7) / UT, AZ
Oljeto (37110-A3) / UT, AZ
Toh Atin Mesa East (36109-H3) / AZ, UT
Toh Atin Mesa West (36109-H4) / AZ, UT

4. Project Summary *(EO1 Mile/EO 3 Miles=elements occuring within 1 & 3 miles., MSO=mexican spotted owl PACs, POTS=potential species, RCP=Biological Areas)*

SITE	EO1MI	EO3MI	QUAD	MSO	POTS	AREAS
Alongo Mines	None	AQCH	Horse Mesa (36109-F1) / AZ, NM	None	LIPI, FAPE, EMTREX, CHMO, BURE, ATCU, AQCH, ZIVA, PUPA, PLZO, CIRY, CASP	Area 3
Barton 3	None	None	Toh Atin Mesa West (36109-H4) / AZ, UT	None	PTLU, GIRO, EMTREX, CHMO, BURE, ATCU, AQCH, ZIVA, PLZO, CIRY, CASP	Area 3
Boyd Tisi No. 2 Western	None	AMPE, PEAMCI, LIPI	Cameron SE (35111-G3) / AZ	None	LIPI, PEAMCI, FAPE, EMTREX, BURE, AQCH, ERRO, AGBE, AMPE	Area 3
Charles Keith	None	None	Oljeto (37110-A3) / UT, AZ	None	LIPI, FAPE, EMTREX, CHMO, BURE, AQCH	Area 1, Area 3

SITE	EO1MI	EO3MI	QUAD	MSO	POTS	AREAS
Eunice Becenti	None	None	Gallup East (35108-E6) / NM	None	FAPE, EMTREX, ATCU, AQCH, LENA, ERSI, ERRH, ERAC	Area 3
Harvey Blackwater No. 3	AQCH	AQCH, PUPA	Garnet Ridge (36109-H7) / AZ, UT	None	VUMA, LIPI, FAPE, EMTREX, CIME, BURE, ATCU, AQCH, ZIVA, PUPA, PRSP, PLZO, CIRY, CASP, ASWE	Area 3
Harvey Blackwater No. 3	AQCH	AQCH, PUPA	Mexican Hat SE (37109-A7) / UT, AZ	None	VUMA, FAPE, EMTREX, ATCU, AQCH, ZIVA, PLZO, CIRY, CASP, ASWE	Area 1
Hoskie Tso No. 1	AQCH	AQCH	Indian Wells (35110-D1) / AZ	None	FAPE, CHMO, BURE, ATCU, AQCH, SAPAER	Area 3
Mitten No. 3	None	AQCH	Oljeto (37110-A3) / UT, AZ	None	LIPI, FAPE, EMTREX, CHMO, BURE, AQCH	Area 3
NA-0904	None	AQCH	Toh Atin Mesa East (36109-H3) / AZ, UT	None	STOCLU, LIPI, PTLU, GIRO, FAPE, EMTREX, CHMO, ATCU, AQCH, PUPA	Area 3
NA-0928	None	None	Toh Atin Mesa East (36109-H3) / AZ, UT	None	STOCLU, LIPI, PTLU, GIRO, FAPE, EMTREX, CHMO, ATCU, AQCH, PUPA	Area 3
Oak124, Oak125	AQCH	AQCH	Horse Mesa (36109-F1) / AZ, NM	None	LIPI, FAPE, EMTREX, CHMO, BURE, AQCH, ZIVA, PUPA, PLZO, CIRY, CASP	Area 3
Occurrence B	None	AQCH, CASP	Del Muerto (36109-B4) / AZ	None	LIPI, FAPE, EMTREX, CIME, AQCH, ZIVA, PLZO, CYUT, CIRY, CASP, ALGO	Area 3
Section 26 (Desiddero Group)	None	None	Dos Lomas (35107-C7) / NM	None	FAPE, CHMO, ATCU, AQCH	Area 3
Standing Rock	None	None	Dalton Pass (35108-F3) / NM	None	VUMA, MUNI, FAPE, CHMO, BURE, ATCU, AQCH, ERSI, ASNA	Area 3

SITE	EO1MI	EO3MI	QUAD	MSO	POTS	AREAS
Tsosie 1	AQCH	AQCH	Toh Atin Mesa East (36109-H3) / AZ, UT	None	STOCLU, LIPI, PTLU, GIRO, FAPE, EMTREX, CHMO, AQCH, PUPA	Area 1, Area 3

5. Conditional Criteria Notes *(Recent revisions made please read thoroughly. For certain species, and/or circumstances, please read and comply)*

A. **Biological Resource Land Use Clearance Policies and Procedures (RCP)** - The purpose of the RCP is to assist the Navajo Nation government and chapters ensure compliance with federal and Navajo laws which protect, wildlife resources, including plants, and their habitat resulting in an expedited land use clearance process. After years of research and study, the NNDFW has identified and mapped wildlife habitat and sensitive areas that cover the entire Navajo Nation.
The following is a brief summary of six (6) wildlife areas:
1.***Highly Sensitive Area*** – recommended no development with few exceptions.
2.***Moderately Sensitive Area*** – moderate restrictions on development to avoid sensitive species/habitats.
3.***Less Sensitive Area*** – fewest restrictions on development.
4.*Community Development Area* – areas in and around towns with few or no restrictions on development.
5.***Biological Preserve*** – no development unless compatible with the purpose of this area.
6.*Recreation Area* – no development unless compatible with the purpose of this area.
None - outside the boundaries of the Navajo Nation
This is not intended to be a full description of the RCP please refer to the our website for additional information at http://www.nndfw.org/clup.htm.

B. **Raptors** – If raptors are known to occur within 1 mile of project location: Contact Chad Smith at 871-7070 regarding your evaluation of potential impacts and mitigation.
o **Golden and Bald Eagles**- If Golden or Bald Eagle are known to occur within 1 mile of the project, decision makers need to ensure that they are not in violation of the Golden and Bald Eagle Nest Protection Regulations found at http://nnhp.nndfw.org/docs_reps/gben.pdf.
o **Ferruginous Hawks** – Refer to "Navajo Nation Department of Fish and Wildlife's Ferruginous Hawk Management Guidelines for Nest Protection" http://nnhp.nndfw.org/docs_reps.htm for relevant information on avoiding impacts to Ferruginous Hawks within 1 mile of project location.
o **Mexican Spotted Owl** - Please refer to the Navajo Nation Mexican Spotted Owl Management Plan http://nnhp.nndfw.org/docs_reps.htm for relevant information on proper project planning near/within spotted owl protected activity centers and habitat.

C. **Surveys** – Biological surveys need to be conducted during the appropriate season to ensure they are complete and accurate please refer to NN Species Accounts http://nnhp.nndfw.org/sp_account.htm. Surveyors on the Navajo Nation must be permitted by the Director, NNDFW. Contact Jeff Cole at (928) 871-7068 for permitting procedures. Questions pertaining to surveys should be directed to the NNDFW Zoologist (Chad Smith) for animals at 871-7070, and Botanist (Andrea Hazelton) for plants at (928)523-3221. Questions regarding biological evaluation should be directed to Jeff Cole at 871-7068.

D. **Oil/Gas Lease Sales** – Any settling or evaporation pits that could hold contaminants should be lined and covered. Covering pits, with a net or other material, will deter waterfowl and other migratory bird use. Lining pits will protect ground water quality.

E. **Power line Projects** – These projects need to ensure that they do not violate the regulations set forth in the Navajo Nation Raptor Electrocution Prevention Regulations found at http://nnhp.nndfw.org/docs_reps/repr.pdf.

F. **Guy Wires** – Does the project design include guy wires for structural support? If so, and if bird species may occur in relatively high concentrations in the project area, then guy wires should be equipped with highly visual markers to reduce the potential mortality due to bird-guy wire collisions. Examples of visual markers include aviation balls and bird flight diverters. Birds can be expected to occur in relatively high concentrations along migration routes (e.g., rivers, ridges or other distinctive linear topographic features) or where important habitat for breeding, feeding, roosting, etc. occurs. The U.S. Fish and Wildlife Service recommends marking guy wires with at least one marker per 100 meters of wire.

G. **San Juan River** – On 21 March 1994 (Federal Register, Vol. 59, No. 54), the U.S. Fish and Wildlife Service designated portions of the San Juan River (SJR) as critical habitat for Ptychocheilus lucius (Colorado pikeminnow) and Xyrauchen texanus (Razorback sucker). Colorado pikeminnow critical habitat includes the SJR and its 100-year floodplain from the State Route 371 Bridge in T29N, R13W, sec. 17 (New Mexico Meridian) to Neskahai Canyon in the San Juan arm of Lake Powell in T41S, R11E, sec. 26 (Salt Lake Meridian) up to the full pool elevation. Razorback sucker critical habitat includes the SJR and its 100-year floodplain from the Hogback Diversion in T29N, R16W, sec. 9 (New Mexico Meridian) to the full pool elevation at the mouth of Neskahai Canyon on the San Juan arm of Lake Powell in T41S, R11E, sec. 26 (Salt Lake Meridian). All actions carried out, funded or authorized by a federal agency which may alter the constituent elements of critical habitat must undergo section 7 consultation under the Endangered Species Act of 1973, as amended. Constituent elements are those physical and biological attributes essential to a species conservation and include, but are not limited to, water, physical habitat, and biological environment as required for each particular life stage of a species.

H. **Little Colorado River** - On 21 March 1994 (Federal Register, Vol. 59, No. 54) the U.S. Fish and Wildlife Service designated Critical Habitat along portions of the Colorado and Little Colorado Rivers (LCR) for Gila cypha (humpback chub). Within or adjacent to the Navajo Nation this critical habitat includes the LCR and its 100-year floodplain from river mile 8 in T32N R6E, sec. 12 (Salt and Gila River Meridian) to its confluence with the Colorado River in T32N R5E sec. 1 (S&GRM) and the Colorado River and 100-year floodplain from Nautuloid Canyon (River Mile 34) T36N R5E sec. 35 (S&GRM) to its confluence with the LCR. All actions carried out, funded or authorized by a federal agency which may alter the constituent elements of Critical Habitat must undergo section 7 consultation under the Endangered Species Act of 1973, as amended. Constituent elements are those physical and biological attributes essential to a species conservation and include, but are not limited to, water, physical habitat, and biological environment as required for each particular life stage of a species.

I. **Wetlands** – In Arizona and New Mexico, potential impacts to wetlands should also be evaluated. The U.S. Fish & Wildlife Service's National Wetlands Inventory (NWI) maps should be examined to determine whether areas classified as wetlands are located close enough to the project site(s) to be impacted. In cases where the maps are inconclusive (e.g., due to their small scale), field surveys must be completed. For field surveys, wetlands identification and delineation methodology contained in the "Corps of Engineers Wetlands Delineation Manual" (Technical Report Y-87-1) should be used. When wetlands are present, potential impacts must be addressed in an environmental assessment and the Army Corps of Engineers, Phoenix office, must be contacted. NWI maps are available for examination at the Navajo Natural Heritage Program (NNHP) office, or may be purchased through the U.S. Geological Survey (order forms are available through the NNHP). The NNHP has complete coverage of the Navajo Nation, excluding Utah, at 1:100,000 scale; and coverage at 1:24,000 scale in the southwestern portion of the Navajo Nation. In Utah, the U.S. Fish & Wildlife Service's National Wetlands Inventory maps are not yet available for the Utah portion of the Navajo Nation, therefore, field surveys should be completed to determine whether wetlands are located close enough to the project site(s) to be impacted. For field surveys, wetlands identification and delineation methodology contained in the "Corps of Engineers Wetlands Delineation Manual" (Technical Report Y-87-1) should be used. When wetlands are present, potential impacts must be addressed in an environmental assessment and the Army Corps of Engineers, Phoenix office, must be contacted. For more information contact the Navajo Environmental Protection Agency's Water Quality Program.

J. **Life Length of Data Request** – The information in this report was identified by the NNHP and NNDFW's biologists and computerized database, and is based on data available at the time of this response. If project planning takes more than two (02) years from the date of this response, verification of the information provided herein is necessary. It should not be regarded as the final statement on the occurrence of any species, nor should it substitute for on-site surveys. Also, because the NNDFW information is continually updated, any given information response is only wholly appropriate for its respective request.

K. **Ground Water Pumping** - Projects involving the ground water pumping for mining operations, agricultural projects or commercial wells (including municipal wells) will have to provide an analysis on the effects to surface water and address potential impacts on all aquatic and/or wetlands species listed below. NESL Species potentially impacted by ground water pumping: Carex specuicola (Navajo Sedge), Cirsium rydbergii (Rydberg's Thistle), Primula specuicola (Cave Primrose), Platanthera zothecina (Alcove Bog Orchid), Puccinellia parishii (Parish Alkali Grass), Zigadenus vaginatus (Alcove Death Camas), Perityle specuicola (Alcove Rock Daisy), Symphyotrichum welshii (Welsh's American-aster), Coccyzus americanus (Yellow-billed Cuckoo), Empidonax traillii extimus (Southwestern Willow Flycatcher), Rana pipiens (Northern Leopard Frog), Gila cypha (Humpback Chub), Gila robusta (Roundtail Chub), Ptychocheilus lucius (Colorado Pikeminnow), Xyrauchen texanus (Razorback Sucker), Cinclus mexicanus (American Dipper), Speyeria nokomis (Western Seep Fritillary), Aechmophorus clarkia (Clark's Grebe), Ceryle alcyon (Belted Kingfisher), Dendroica petechia (Yellow Warbler), Porzana carolina (Sora), Catostomus discobolus (Bluehead Sucker), Cottus bairdi (Mottled Sculpin), Oxyloma kanabense (Kanab Ambersnail)

6. Personnel Contacts

Wildlife Manager
Sam Diswood
928.871.7062
sdiswood@nndfw.org

Zoologist
Chad Smith
928.871.7070
csmith@nndfw.org

Botanist
Vacant

Biological Reviewer
Pamela Kyselka
928.871.7065
pkyselka@nndfw.org

GIS Supervisor
Dexter D Prall
928.645.2898
prall@nndfw.org

Wildlife Tech
Sonja Detsoi
928.871.6472
sdetsoi@nndfw.org

7. Resources

National Environmental Policy Act

Navajo Endangered Species List:
http://nnhp.nndfw.org/endangered.htm

Species Accounts:
http://nnhp.nndfw.org/sp_account.htm

Biological Investigation Permit Application
http://nnhp.nndfw.org/study_permit.htm

Navajo Nation Sensitive Species List
http://nnhp.nndfw.org/study_permit.htm

Various Species Management and/or Document and Reports
http://nnhp.nndfw.org/docs_reps.htm

Consultant List
(Coming Soon)

Dexter D Prall

Digitally signed by Dexter D Prall
DN: cn=Dexter D Prall, o=Navajo Nation Department of Fish and Wildlife, ou=Navajo Natural Heritage Program, email=dprall@nndfw.org, c=US
Date: 2015.11.19 15:56:30 -07'00'

Dexter D Prall, GIS Supervisor - Natural Heritage Program
Navajo Nation Department of Fish and Wildlife

MWH

BUILDING A BETTER WORLD

November 18, 2015

TO: Navajo Natural Heritage Program
Navajo Nation Dept. of Fish and Wildlife
ATTN: Sonja Detsoi and Dexter Prall
P.O. Box 1480
Window Rock, AZ 86515

FROM: MWH Americas
ATTN: Eileen Dornfest, Project Manager
3665 John F Kennedy Parkway
Bldg 1, Suite 206
Ft. Collins, CO 80525
Phone: (970) 377-9410
Fax: (970) 377-9406
E-mail: Eileen.Dornfest@mwhglobal.com

SUBJECT: Request for T and E Information for 16 Abandoned Uranium Mine (AUM) Sites

PROJECT NAME:
Navajo Nation AUM Environmental Response Trust (ERT) Project

LOCATION:
16 AUM Sites (attached in GIS shape files and USGS topographic maps)

SUMMARY DESCRIPTION OF PROJECT:
The work is to be conducted at 16 Abandoned Uranium Mines (AUMs) and includes Removal Site Evaluations (RSEs) according to CERCLA at each of the Sites. The RSEs are site investigations that include the following activities:

- conducting background soil studies
- conducting gamma radiation scans of surface soils
- sampling surface and subsurface soils and sediments related to historic mining operations
- assessing radiation exposure inside mine operations buildings, homes, or other nearby structures (if present at the Sites)
- sampling existing and accessible groundwater wells
- mitigating physical hazards and other interim response actions
- preparing a final written report documenting the work performed and information obtained for each of the Sites

MWH

BUILDING A BETTER WORLD

TOPOGRAPHIC MAPS ATTACHED:

- Blue Gap Quadrangle, Arizona-Apache Co.
- Cameron SE Quadrangle, Arizona-Coconino Co.
- Cameron South Quadrangle, Arizona-Coconino Co.
- Del Muerto Quadrangel, Arizona-Apache Co.
- Five Buttes Quadrangle, Arizona-Navajo Co.
- Garnet Ridge Quadrangle, Arizona-Utah
- Horse Mesa Quadrangle, Arizona-New Mexico
- Indian Wells Quadrangle, Arizona-Navajo Co.
- Tah Chee Wash Quadrangle, Arizona-Apache Co.
- Toh Atin Mesa East Quadrangle, Arizona-Utah
- Toh Atin Mesa West Quadrangle, Arizona-Utah
- Bluewater Quadrangle, New Mexico
- Bread Springs Quadrangle, New Mexico-McKinley Co.
- Dalton Pass Quadrangle, New Mexico-McKinley Co.
- Dos Lomas Quadrangle, New Mexico
- Gallup East Quadrangle, New Mexico-McKinley Co.
- Sand Spring Quadrangle, New Mexico-San Juan Co.
- Standing Rock Quadrangle, New Mexico-McKinley Co.
- Mexican Hat SE Quadrangle, Utah-San Juan Co.
- Oljato Quadrangle, Utah-San Juan Co.

2365 John F Kennedy Pkwy TEL 970 377 9410
Bldg 1, Suite 200 FAX 970 377 9408

THE NAVAJO NATION
HISTORIC PRESERVATION DEPARTMENT
PO Box 4950, Window Rock, Arizona 86515
TEL: (928) 871-7198 FAX: (928) 871-7886

CULTURAL RESOURCE COMPLIANCE FORM

ROUTE COPIES TO:	NNHPD NO.: HPD-16-588
☑ DCRM	OTHER PROJECT NO.: DCRM 2016-06

PROJECT TITLE: A Cultural Resource Inventory of Eight Abandoned Uranium Mines (Northern Region) for MWH Americas, Inc. in the Western and Shiprock Agencies of the Navajo Nation, in Utah, Arizona, and New Mexico.

LEAD AGENCY: BIA/NR

SPONSOR: Sadie Hoskie, Trustee, Navajo National AUM, Environmental Response Trust, P.O. Box 3330, Window Rock, AZ 86515

PROJECT DESCRIPTION: The proposed undertaking will involve proposing to complete Removal Site Evaluations to define the horizontal extent of contamination in surface soils and sediments at the eight former uranium mine areas. The proposed undertaking may involve intensive ground disturbance with the use of heavy equipment and hand tools. The area of potential effect is 54.4-acres.

LAND STATUS:	Navajo Tribal Trust													
CHAPTER:	Oljato, Dennehotso, Mexican Water, Sweetwater, and Red Valley													
LOCATION:	*T.*	43	*S.,*	*R.*	24&14	*E-*	*Sec.*	14&24;	Oljato	Quadrangle,	San Juan	County	UT	SLPM
	T.	43	*S.,*	*R.*	14	*E-*	*Sec.*	13;	Oljato	Quadrangle,	San Juan	County	UT	SLPM
	T.	43	*S.,*	*R.*	19&23	*E-*	*Sec.*	UP;	Garnet Ridge	Quadrangle,	Apache	County	AZ	G&SRPM
	T.	43	*N.,*	*R.*	19	*E-*	*Sec.*	UP;	Mexican Hat	Quadrangle,	Apache	County	AZ	G&SRPM
	T.	41&40	*N.,*	*R.*	27, 28& 23	*E-*	*Sec.*	UP;	Toh Atin Mesa West	Quadrangle,	Apache	County	AZ	G&SRPM
	T	29	*N.,*	*R.*	21	*W-*	*Sec.*	UP;	Horse Mesa	Quadrangle,	San Juan	County	NM	NMPM

PROJECT ARCHAEOLOGIST:	Rena Martin
NAVAJO ANTIQUITIES PERMIT NO.:	B16728
DATE INSPECTED:	4/16/2016, 5/18/2016
DATE OF REPORT:	7/15/2016
TOTAL ACREAGE INSPECTED:	105.2 – ac
METHOD OF INVESTIGATION:	Class III pedestrian inventory with transects spaced 10 m apart.
LIST OF CULTURAL RESOURCES FOUND:	**(8) sites (UT-B-59-8, UT-C-63-12, AZ-I-5-25, AZ- I-7-72, AZ-I-6-79, NM-I-24-87, NM-I-24-88, NM-I-24-89)** **(1) In Use Area** **(23) Isolated Occurrences (IOs)**
LIST OF ELIGIBLE PROPERTIES:	**(8) sites (UT-B-59-8, UT-C-63-12, AZ-I-5-25, AZ-I-7-72, AZ-I-6-79, NM-I-24-87, NM-I-24-88, NM-I-24-89)**
LIST OF NON-ELIGIBLE PROPERTIES:	**(1) In Use Area, (23) IOs**
LIST OF ARCHAEOLOGICAL RESOURCES:	**(5) sites (UT-B-59-8, UT-C-63-12, AZ-I-7-72, AZ-I-6-79, NM-I-24-89)**

EFFECT/CONDITIONS OF COMPLIANCE: No historic properties affected with the following conditions:

Sites: UT-B-59-8, UT-C-63-12, AZ-I-5-25, AZ- I-7-72, AZ-I-6-79, NM-I-24-87, NM-I-24-89:
1. Prior to any construction, the site boundaries will be flagged and/or temporarily fenced under the direction of a qualified archaeologist & shown to the construction foreman.
2. All ground disturbance within the 50 ft. of the site boundaries will be monitored by a qualified archaeologist.
3. No construction, equipment or vehicular traffic will be allowed within the site boundaries.
4. A brief letter/report documenting the result of the monitoring will be submitted to NNHPD within 30 days of monitoring activities.
5. All future maintenance activities shall avoid the site by a minimum of 50 ft. from the site boundaries.

Site NM-I-24-88:
Given the environmental hazards the mine possesses, and the thorough extent of the ethnographic information, all research potential has been exhausted. No further work is warranted.

TCPs.
No effect by proposed undertaking.

In the event of a discovery [*"discovery"* means any previously unidentified or incorrectly identified cultural resources including but not limited to archaeological deposits, human remains, or locations reportedly associated with Native American religious/traditional beliefs or practices], all operations in the immediate vicinity of the discovery must cease, and the Navajo Nation Historic Preservation Department must be notified at (928) 871-7198.

FORM PREPARED BY: **Tamara Billie**
FINALIZED: September 9, 2016

Notification to Proceed Recommended	☑ Yes ☐ No	Tamara Billie	9/9/16
Conditions:	☑ Yes ☐ No	The Navajo Nation Historic Preservation Office	Date
Navajo Region Approval	☒ Yes ☐ No	Acting BIA Navajo Regional Office	SEP 28 2016 Date

6 11-7/16

BIOLOGICAL RESOURCES COMPLIANCE FORM
NAVAJO NATION DEPARTMENT OF FISH AND WILDLIFE
P.O. BOX 1480, WINDOW ROCK, ARIZONA 86515-1480

It is the Department's opinion the project described below, with applicable conditions, is in compliance with Tribal and Federal laws protecting biological resources including the Navajo Endangered Species and Environmental Policy Codes, U.S. Endangered Species, Migratory Bird Treaty, Eagle Protection and National Environmental Policy Acts. This form does not preclude or replace consultation with the U.S. Fish and Wildlife Service if a Federally-listed species is affected.

PROJECT NAME & NO.: Barton No. 3 - Abandoned Uranium Mine Project

DESCRIPTION: Proposed Phase I & II scientific investigations at an abandoned mine site. Phase I would entail biological and land surveying with a maximum of 5 people onsite for no more than 5-7 days. Disturbance would be light. Phase II would require the use of an excavator or a small mobile drilling unit to collect one or more soil samples with up to 8 people onsite for a period of one week. A temporary travel corridor 20 ft. in width would be necessary to move equipment to the site. Disturbance would be light to moderate. No permanent structures would be left onsite. Total land use would be approximately 3.1 acres.

LOCATION: 36°56'20"N 109°26'48"W, Red Mesa Chapter, Apache County, Arizona

REPRESENTATIVE: Lori Gregory, Adkins Consulting, Inc. for MWH Global/Stantec

ACTION AGENCY: U.S. Environmental Protection Agency and Navajo Nation

B.R. REPORT TITLE / DATE / PREPARER: BE-Barton No. 3 Abandoned Uranium Mine Project/JUN 2016/Lori Gregory, Plant Survey Report for Species of Concern At Barton 3 Project Site/AUG 2016/Redente Ecological Consultants

SIGNIFICANT BIOLOGICAL RESOURCES FOUND: Area 3. Suitable nesting habitat is present in the project area for Migratory Birds not listed under the NESL or ESA. Migratory Birds and their habitats are protected under the Migratory Bird Treaty Act (16 USC §703-712) and Executive Order 13186. Under the EO, all federal agencies are required to consider management impacts to protect migratory non-game birds.

POTENTIAL IMPACTS

NESL SPECIES POTENTIALLY IMPACTED: Athene cunicularia (Burrowing Owl) G4, MBTA. Breeding season: 01 MAR-15 AUG.

FEDERALLY-LISTED SPECIES AFFECTED: NA

OTHER SIGNIFICANT IMPACTS TO BIOLOGICAL RESOURCES: NA

AVOIDANCE / MITIGATION MEASURES: Mitigation measures will be implemented to ensure that there are no impacts to migratory birds that could potentially nest in the project area.

CONDITIONS OF COMPLIANCE*: NA

FORM PREPARED BY / DATE: Pamela A. Kyselka/10 NOV 2016

COPIES TO: (add categories as necessary)

☐ _____ ☐ _____

2 NTC § 164 Recommendation:	Signature	Date
☒Approval ☐Conditional Approval (with memo) ☐Disapproval (with memo) ☐Categorical Exclusion (with request letter) ☐None (with memo)	Gloria M. Tom, Director, Navajo Nation Department of Fish and Wildlife	11/16/16

*I understand and accept the conditions of compliance, and acknowledge that lack of signature may be grounds for the Department not recommending the above described project for approval to the Tribal Decision-maker.

Representative's signature Date

From:	Nystedt, John
To:	Justin Peterson
Cc:	Lori Gregory; Pam Kyselka; tbillie@navajo-nsn.gov; Harrilene Yazzie; Melissa Mata
Subject:	Navajo Nation AUM Environmental Response Trust - -First Phase
Date:	Monday, November 07, 2016 4:08:30 PM
Attachments:	image001.png

Justin,

Thank you for your November 6, 2016, email. This email documents our response regarding the subject project, in compliance with section 7 of the Endangered Species Act of 1973 (ESA) as amended (16 U.S.C. 1531 et seq.). Based on the information you provided, we believe no endangered or threatened species or critical habitat will be affected by this project; nor is this project likely to jeopardize the continued existence of any proposed species or adversely modify any proposed critical habitat. No further review is required for this project at this time. Should project plans change or if new information on the distribution of listed or proposed species becomes available, this determination may need to be reconsidered. In all future communication on this project, please refer to consultation numbers given below.

In keeping with our trust responsibilities to American Indian Tribes, by copy of this email, we will notify the Navajo Nation, which may be affected by the proposed action and encourage you to invite the Bureau of Indian Affairs to participate in the review of your proposed action.

Should you require further assistance or if you have any questions, please contact me as indicated below, or my supervisor, Brenda Smith, at 556-2157. Thank you for your continued efforts to conserve endangered species.

Claim 28	02EAAZ00-2016-SLI-0358
Section 26 (Desiddero Group)	02ENNM00-2016-SLI-0447
Mitten #3	06E23000-2016-SLI-0210
NA-0904	02EAAZ00-2016-SLI-0363
Occurrence B	02EAAZ00-2016-SLI-0361
Standing Rock	02ENNM00-2016-SLI-0448
Alongo Mines	02ENNM00-2016-SLI-0465
Tsosie 1*	02EAAZ00-2016-SLI-0364
Boyd Tisi No. 2 Western	02EAAZ00-2016-SLI-0355
Harvey Blackwater #3	02EAAZ00-2016-SLI-0356 / 06E23000-2016-SLI-0207
Oak 124/125	02ENNM00-2016-SLI-0466
NA-0928	02EAAZ00-2016-SLI-0360
Hoskie Tso #1	02EAAZ00-2016-SLI-0362
Charles Keith	06E23000-2016-SLI-0208
Barton 3	02EAAZ00-2016-SLI-0354
Eunice Becenti	02ENNM00-2016-SLI-0444

* It is our understanding that the Tsosie No. 1 site has been put on hold indefinitely due to access issues. However, provided the results of the survey were negative (i.e., no potential for

any ESA-listed species) then we would come to the same conclusion, above, as for the other 15 projects.

.··..··..··..··...··..··..··..··..··..··..··..··..··...··..··..··..··..··.

Fish and Wildlife Biologist/AESO Tribal Coordinator
USFWS AZ Ecological Services Office - Flagstaff Suboffice
Southwest Forest Science Complex, 2500 S Pine Knoll Dr, Rm 232
Flagstaff, AZ 86001-6381 (928) 556-2160 Fax-2121 Cell:(602) 478-3797
http://www.fws.gov/southwest/es/arizona/

Appendix F Data Usability Report, Laboratory Analytical Data, and Data Validation Reports

F.1 Data Usability Report

F.2 Laboratory Analytical Data and Data Validation Reports

(provided in a separate electronic file due to its file size and length)

F.1 Data Usability Report

DATA USABILITY REPORT

1.0 INTRODUCTION

This data usability report presents a summary of the validation results for the sample data collected from the Barton 3 Site (the Site) as part of the Removal Site Evaluation (RSE) performed for the Navajo Nation AUM Environmental Response Trust—First Phase. The purpose of the validation was to ascertain the data usability measured against the data quality objectives (DQOs) and confirm that results obtained are scientifically defensible.

Samples were collected between October 3, 2016 and August 26, 2017 and were analyzed by ALS Environmental of Ft. Collins, Colorado, for all methods. Samples were analyzed for one or more of the following:

- Radium-226 in soil by United States Environmental Protection Agency (USEPA) Method 901.1
- Metals in soil by USEPA Method SW6020
- Isotopic thorium in soil by USDOEAS-06/EMSL/LV

Samples were collected and analyzed according to the procedures and specific criteria presented in the *Quality Assurance Project Plan, Navajo Nation AUM Environmental Response Trust (QAPP)* (MWH, 2016).

Project data were validated as follows:

- Laboratory Data Consultants, Inc. (LDC) of Carlsbad, California, performed validation of all radiological soil data, plus ten percent of the non-radiological data (Level IV only)
- All non-radiological soil data were validated by the Stantec Consulting Services Inc. (Stantec; formerly MWH) Project Chemist (Level III only)
- All samples received Level III data validation
- Ten percent of the sample results for all methods received a more detailed Level IV validation

The analytical data were validated based on the results of the following data evaluation parameters or quality control (QC) samples:

- Compliance with the QAPP
- Sample preservation
- Sample extraction and analytical holding times

- Initial calibration (ICAL), initial calibration verification (ICV), and continuing calibration verification (CCV) results
- Method and initial/continuing calibration blank (ICB/CCB) sample results
- Matrix spike/matrix spike duplicate (MS/MSD) sample results
- Laboratory duplicate results
- Serial dilution (metals analysis only)
- Interference check samples (ICS) (metals analysis only)
- Laboratory control sample (LCS) and laboratory control sample duplicate (LCSD) results
- Field duplicate sample results
- Minimum detectable concentration (radiological analyses only)
- Reporting limits
- Sample result verification
- Completeness evaluation
- Comparability evaluation

Sample results that were qualified due to quality control parameters outside of acceptance criteria are listed on Table F.1-1.

2.0 DATA VALIDATION RESULTS

Stantec reviewed the data validation reports and assessed the qualified data against the DQOs for the project. The following summarizes the data validation findings for each of the data evaluation parameters.

2.1 QUALITY ASSURANCE PROJECT PLAN COMPLIANCE EVALUATION

Based on the data validation, all samples were analyzed following the quality control criteria specified in the QAPP, with the following exception: ALS routinely dilutes all metals samples by a factor of 10 times in order to protect their ICP-MS instrument from the adverse effects of running samples with high total dissolved solids. This also includes running a long series of samples (as is common in a production laboratory) with intermediate dissolved solids. The vulnerable parts of the instrument are the nebulizer, which produces an aerosol, and the cones, which disperse the aerosol. These areas form scaly deposits from the samples in the sample solution, despite the

nitric acid and other acids present in the digestate. These parts of the instrument periodically need to be taken apart and cleaned, but in a production setting the laboratory wants to avoid any downtime as much as possible. As an ameliorating factor, the laboratory also takes account of this dilution factor up front in the project planning stages. The laboratory will not quote a reporting limit for this instrument that cannot be achieved after the 10 times dilution required for the instrument. Not all of the requested reporting limits can be met using the laboratory's routine protocol. The dilution is narrated by the laboratory merely as a matter of transparency, as well as for the validator's information. The dilution should have no impact on the project's sensitivity goals.

Sample Preservation Evaluation. All samples were preserved as specified in the QAPP.

Holding Time Evaluation. All analytical holding times were met.

Initial Calibration, Initial Calibration Verification, and Continuing Calibration Verification Evaluation. All ICAL, ICV, and CCV results were within acceptance criteria.

Method Blank Evaluation. No sample data were qualified due to method blank results.

Initial and Continuing Calibration Blank Evaluation. No sample data were qualified due to ICB/CCB data.

Matrix Spike/Matrix Spike Duplicate Samples Evaluation. All MS/MSD recoveries were within acceptance criteria with the exception of one MS recovery and four MSD recoveries for the analysis of metals. Table F.1-1 lists the analytes where an MS and/or MSD percent recovery was outside the acceptance criteria. Sample results were qualified with a "J+" flag for results that were estimated and potentially biased high; sample results were qualified with a "J-" flag for results that were estimated and potentially biased low. All MS/MSD RPDs were within acceptance criteria.

Laboratory Duplicate Sample Evaluation. For some analyses, the laboratory prepared and analyzed a duplicate sample. RPD results were evaluated between the parent and laboratory duplicate samples. All RPDs were within acceptance criteria except one sample for the analysis of molybdenum and one sample for the analysis of vanadium. The results were qualified with a "J" flag to indicate an estimated result.

Serial Dilution Evaluation. All serial dilution percent differences were within acceptance criteria.

Interference Check Sample Evaluation. All interference check samples were within acceptance criteria.

Laboratory Control Sample/Laboratory Control Sample Duplicate Evaluation. All LCS and LCSD recoveries were within acceptance criteria. All LCS/LCSD RPDs were within acceptance criteria.

Field Duplicate Evaluation. The RPDs were less than the guidance RPD of 30 percent established in the QAPP for all field duplicate pairs, with the exception of results for five metals. The primary cause for RPDs exceeding 30 percent for some duplicate pairs is assumed to be the heterogeneity/variability of soil samples. The sample IDs, sample results, and RPDs for those results that did not meet the guidance RPD are listed in Table F.1-2. Sample results were not qualified due to RPDs exceeding the guidance criteria, as described in the QAPP.

Minimum Detectable Concentration Evaluation. All minimum detectable concentrations met reporting limits with the exception of five samples for the analysis of radium-226. However, the reported activity for each of these samples was greater than the achieved minimum detectable concentration and no qualification was needed.

Reporting Limit Evaluation. All sample data were reported to the reporting limit established in the QAPP, with the exception of the metals, as discussed at the beginning of this section related to dilution.

Sample Result Verification. All sample result verifications were acceptable with the exception of seven samples analyzed for radium-226. The sample density exceeded the limit of +/- 15% of the density of the calibration standard. In all cases the results were qualified with a "J-" flag as estimated, potentially biased low (see Table F.1-1).

Completeness Evaluation. All samples and QC samples were collected as scheduled, resulting in 100 percent sampling completeness for this project. Based on the results of the data validation described in the previous sections, all data are considered valid as qualified. No data were rejected; consequently, analytical completeness was 100 percent, which met the 95 percent analytical completeness goal established in the QAPP.

Comparability Evaluation. Comparability is a qualitative parameter that expresses the confidence that one data set may be compared to another. For this project, sample collection and analysis followed standard methods and the data were reported using standard units of measure as specified in the QAPP. In addition, QC data for this project indicate the data are comparable. As a result, the data from this project should be comparable to other data collected at this Site using similar sample collection and analytical methodology.

3.0 DATA VALIDATION SUMMARY

Precision. Based on the MS/MSD sample, LCS/LCSD sample, laboratory duplicate sample, and field duplicate results, the data are precise as qualified.

Accuracy. Based on the ICAL, ICV, CCV, MS/MSD, and LCS, the data are accurate as qualified.

Representativeness. Based on the results of the sample preservation and holding time evaluation; the method and ICB/CCB blank sample results; the field duplicate sample

evaluation; and the RL evaluation the data are considered representative of the Site as reported.

Completeness. All media and QC sample results were valid and collected as scheduled; therefore, completeness for this RSE is 100 percent.

Comparability. Standard methods of sample collection and standard units of measure were used during this project. The analysis performed by the laboratory was in accordance with current USEPA methodology and the QAPP.

Based on the results of the data validation, all data are considered valid as qualified.

Table F.1-1
Summary of Qualified Data
Barton 3
Removal Site Evaluation Report - Final
Navajo Nation AUM Environmental Response Trust - First Phase

Field Sample Identification	Sample Date	Analysis Code	Analyte	Sample Result	Units	QC Type	QC Result	QC Limit	Added Flag	Comment
S220-BG1-007	10/6/16	SW6020	Uranium	2.2	mg/kg	MSD	128%	75% - 125%	J+	Result is estimated, potentially biased high. MSD recovery above acceptance criteria.
S220-BG1-003	10/6/16	E901.1	Radium-226	1.63	pCi/g	Result Verification		±15%	J-	Result is estimated, potentially biased low. Sample density differs by more than 15% of LCS density.
S220-BG1-004	10/6/16	E901.1	Radium-226	2.11	pCi/g	Result Verification		±15%	J-	Result is estimated, potentially biased low. Sample density differs by more than 15% of LCS density.
S220-BG1-001	10/6/16	E901.1	Radium-226	3.68	pCi/g	Result Verification		±15%	J-	Result is estimated, potentially biased low. Sample density differs by more than 15% of LCS density.
S220-C04-001	10/14/17	E901.1	Radium-226	6.73	pCi/g	Result Verification		±15%	J-	Result is estimated, potentially biased low. Sample density differs by more than 15% of LCS density.
S220-CX-006	4/15/17	SW6020	Vanadium	59	mg/kg	LR	26%	20%	J	Result is estimated, bias unknown. LR RPD outside acceptance criteria.
S220-CX-006	4/15/17	SW6020	Uranium	3.1	mg/kg	MSD	150%	75% - 125%	J+	Result is estimated, potentially biased high. MSD recovery above acceptance criteria.
S220-SCX-013-002	6/7/17	SW6020	Arsenic	16	mg/kg	MS MSD	51% 62%	75% - 125% 75% - 125%	J-	Result is estimated, potentially biased low. MS and MSD recoveries below acceptance criteria.
S220-SCX-013-002	6/7/17	SW6020	Molybdenum	2	mg/kg	LR	24%	20%	J	Result is estimated, bias unknown. LR RPD outside acceptance criteria.
S220-SCX-012-002	6/7/17	E901.1	Radium-226	9.6	pCi/g	Result Verification		±15%	J-	Result is estimated, potentially biased low. Sample density differs by more than 15% of LCS density.
S220-SCX-012-202	6/7/17	E901.1	Radium-226	8	pCi/g	Result Verification		±15%	J-	Result is estimated, potentially biased low. Sample density differs by more than 15% of LCS density.
S220-SCX-013-001	6/7/17	E901.1	Radium-226	26.5	pCi/g	Result Verification		±15%	J-	Result is estimated, potentially biased low. Sample density differs by more than 15% of LCS density.
S220-BG3-001	8/26/17	SW6020	Vanadium	10	mg/kg	MSD	131%	75% - 125%	J+	Result is estimated, potentially biased high. MSD recovery above acceptance criteria.

Notes
mg/kg milligrams per kilogram
pCi/g picocuries per gram
LCS laboratory control sample
LR laboratory replicate (duplicate)
MS matrix spike
MSD matrix spike duplicate
RPD relative percent difference

Stantec
NAVAJO NATION
AUM Environmental Response Trust - First Phase

Table F.1-2
Results that did not Meet the Relative Percent Difference Guidance
Barton 3
Removal Site Evaluation Report - Final
Navajo Nation AUM Environmental Response Trust - First Phase

Primary Sample / Duplicate Indentification	Sample Date	Parameter	Primary Result	Duplicate Result	Units	RPD (%)
S220-CX-002/S220-CX-202	4/15/2017	Molybdenum	1.2	1.7	mg/kg	35%
S220-SCX--017-002/S220-SCX-017-202	6/7/2017	Arsenic	4.8	8.7	mg/kg	58%
S220-SCX--017-002/S220-SCX-017-202	6/7/2017	Molybdenum	5	8.8	mg/kg	55%
S220-SCX-012-002/S220-SCX-012-202	6/7/2017	Arsenic	3.6	56	mg/kg	176%
S220-SCX-012-002/S220-SCX-012-202	6/7/2017	Molybdenum	2.4	7.4	mg/kg	102%

Notes
mg/kg milligrams per kilogram
RPD relative percent difference