June 10, 2016 ***Submitted Via Email***

Mr. Syed Quadri
USEPA Region V
77 W. Jackson Blvd.
Mail Code SR-6J
Chicago, IL 60604-3507
quadri.syed@epamail.epa.gov

Re: Revised Phase 2 Additional Protective Measures Final Work Plan
Yeoman Creek Landfill Superfund Site; Waukegan, Illinois

Dear Mr. Quadri:

The Yeoman Creek Remediation Group (YCRG) has reviewed the redlines/comments provided by EPA (email dated 6/7/2016) on the Revised Phase 2 Additional Protective Measures Final Work Plan (dated May 2016). Based on our review of those changes and my discussions with you on behalf of the YCRG, it is our understanding that EPA accepts and approves the response to comments (letter dated April 29, 2016), as well as the Revised Phase 2 Additional Protective Measures Final Work Plan (June 2016, attached) which now incorporates all of the EPA's redlines.

The YCRG has been proactive in attempting to coordinate implementation of the Phase 2 work, and has a planning meeting scheduled with the TNH management next week. In order to further the implementation scheduling/plan, the YCRG needs written approval/notice to proceed from EPA by June 14, 2016 for the response to comments and the Revised Phase 2 Additional Protective Measures Final Work Plan. And, as previously discussed, the final Phase 2 construction schedule will be subject to coordination with the TNH management.

We look forward to timely approval. If you have questions, please contact me at (813)930-0669 ext. 205.

Sincerely,
Progressive Engineering & Construction, Inc.

Bridget S. Morello

Bridget S. Morello, P.E.
Principal Engineer

cc: YCRG Technical Committee
Beau Harp, CEC
Chit Christian, TetraTech
Bob Solak, HHS
Erin Rednour, IEPA

00019849-1

REVISED PHASE 2 ADDITIONAL PROTECTIVE MEASURES
FINAL WORK PLAN
YEOMAN CREEK LANDFILL

Prepared For:
YEOMAN CREEK REMEDIATION GROUP

Prepared By:
CIVIL & ENVIRONMENTAL CONSULTANTS, INC.
LOMBARD, ILLINOIS

CEC Project 121-067

June 2016

Civil & Environmental Consultants, Inc.

Chicago 555 Butterfield Road, Suite 300 | Lombard, IL 60148 | p: 630-963-6026 f: 630-963-6027 | www.cecinc.com

EXECUTIVE SUMMARY

This Revised Phase 2 Additional Protective Measures Final Work Plan (Work Plan) updates and supersedes the Conceptual Plan Phase 2 Additional Protective Measures (Conceptual Plan, dated July 24, 2013) and the Phase 2 Additional Protective Measures Final Work Plan (December 2015) for protective measures to address methane observations in monitoring probes located at the Terrace Nursing Home (TNH) property. This Work Plan outlines the new approach for the TNH parking lot area, and provides documentation demonstrating that no protective measures are needed for the TNH backyard area. It is based on discussions of the Phase 2 plan with the United States Environmental Protection Agency (USEPA), Illinois Environmental Protection Agency (IEPA), and additional work by Yeoman Creek Remediation Group (YCRG) at TNH to facilitate a reevaluation of the Phase 2 approach.

YCRG previously completed Phase 1 additional protective measures at the TNH building (in December 2013) pursuant to a similar design/review/approval process that commenced in late 2012, and involved the collective technical parties of YCRG, USEPA, and IEPA. Those Phase 1 measures have demonstrated to provide the added level of protection for the building/residents, as contemplated by YCRG and USEPA at the onset of this additional protective measures process.

The new Phase 2 additional protective measures for the TNH parking lot area include:

- Excavation of a large portion of the TNH parking lot area and placement of highly permeable backfill in the excavated area.
- Replacement of gas monitoring probes located in the excavation area.
- Installation of the "TNH Gas System" to enable passive and/or active operation of soil vapor extraction (SVE), consisting of the following:
    - new perforated piping and vent stacks in the parking lot area;
    - reconfiguration of the existing TNH parking lot (311R) extraction system piping; and
    - new piping and flanged caps to facilitate future connections to active soil vapor extraction equipment, if deemed necessary.
- Placement of excavated soils on low-lying areas of the East Yeoman Creek Landfill.

No protective measures are necessary or planned for the TNH backyard area since all gas-monitoring probes in that area demonstrate that methane is not present in the vadose zone at any levels of potential concern. However, continued monitoring of gas probes in the backyard will continue per the USEPA approved Long-Term Monitoring Plan.

The Phase 2 construction duration (Stage 1) is estimated to take one month. The YCRG anticipates construction can be completed in 2016, pending timely approval of this Work Plan, coordination with TNH, and weather.

Initially, the TNH Gas System will involve passive operation of the new gas piping/vent stacks along with active operation of the former/reconfigured TNH parking lot (311R) extraction piping. The specific methane monitoring and operational decision-making process for the TNH Gas System was developed by YCRG and USEPA and is intended as a tool to demonstrate the system performance and enable timely adjustments or closure of the protective measures. The process should guide decision-making, and may need to be reevaluated during the life of this project based on real-time observations or changes in site conditions.

TABLE OF CONTENTS

1.0 INTRODUCTION 1
2.0 SUMMARY OF SITE HISTORY AND ADDITIONAL INVESTIGATIONS 2
2.1 Site History 2
2.1 Parking Lot Soil Boring and Sampling 5
2.2 Backyard Gas Probe Installation 6
3.0 REVISED PHASE 2 DESIGN 8
3.1 General 8
3.2 Parking Lot Soil Excavation and probe replacement 8
3.3 Passive/Active Gas Extraction System 9
3.4 Reuse of Excavated Soils 10
4.0 PHASE 2 PROTECTIVE MEASURES CONSTRUCTION 11
4.1 General 11
4.2 Parking Lot Excavation and Backfill 11
4.3 Placement of Excavated Parking Lot Soil 12
4.4 Installation of TNH Gas System 13
4.5 Installation of Replacement Gas Probes 14
4.6 Restoration Activities 14
4.7 Construction Oversight and Documentation 14
4.8 Health and Safety 14
5.0 PHASE 2 PROTECTIVE MEASURES OPERATION 16
5.1 General Monitoring and Reporting 16
5.2 Performance Decision Making Process 16
6.0 PHASE 2 IMPLEMENTATION SCHEDULE 19

DESIGN DRAWINGS

C000 - Title Sheet
C100 - Geological Section Locations
C101 - Geological Cross Section A-A’
C102 - Geological Cross Section B-B’
C103 - Geological Cross Section C-C’
C200 - TNH Existing Property Features
C300 - Proposed Parking Lot Excavation
C301 - Proposed Phase 2 System Layout (Passive)
C302 - Future Phase 2 System Layout – Parking Lot (Active)
C800 - Detail Sheet I
C801 - Detail Sheet II
C802 - Detail Sheet III

C803 - Future Equipment Building Layout and Specifications
C804 - Future P&ID Soil Vapor Extraction
C001 - Technical Specifications

TABLES

Table 1 - Comparison of Soil Sampling Analytical Data to TACO Residential Soil Remediation Objectives
Table 2 - Proposed Methane Monitoring Schedule
Table 3 - Phase 2 Protective Measures Implementation Schedule

APPENDICES

Appendix A - Parking Lot Boring Logs
Appendix B - Soil Sampling Laboratory Analysis
Appendix C - Backyard Gas Probe Boring Logs and As-built

1.0 INTRODUCTION

On behalf of Yeoman Creek Remediation Group (YCRG), Civil & Environmental Consultants, Inc. (CEC) has prepared this Revised Phase 2 Additional Protective Measures Final Work Plan (Work Plan) to document the new plan for protective measures to address methane observations in monitoring probes located at the Terrace Nursing Home (TNH) property. This Work Plan updates and supersedes the Conceptual Plan Phase 2 Additional Protective Measures (Conceptual Plan, dated July 24, 2013) and the Phase 2 Additional Protective Measures Final Work Plan (December 2015), and is based on further discussions with the United States Environmental Protection Agency (USEPA), Illinois Environmental Protection Agency (IEPA), and additional work and evaluation of options by YCRG.

The collective technical parties of YCRG, USEPA, and IEPA set a priority to evaluate and address potential methane pathways and add further protective measures for the residents at TNH. The YCRG has developed additional protective measures to address elevated levels of methane in some parking lot gas probes at TNH. This effort was undertaken despite the historical methane monitoring data, which demonstrate no methane detections in the TNH building, and other protective measures already being in place.

The YCRG submitted the final Phase 1 Conceptual Plan (dated April 25, 2013), and USEPA issued conditional approval (letter dated May 22, 2013) and final approval (email dated September 10, 2013). The TNH Phase 1 measures were implemented in December 2013, and have been demonstrated to provide the added level of protection for the building/residents, as originally contemplated by YCRG and USEPA.

The Phase 2 Conceptual Plan included protective measures for the TNH parking lot and the backyard area. This Work Plan outlines the new approach for the TNH parking lot area, and provides documentation demonstrating that no additional protective measures are needed for the backyard area. Where applicable, this Work Plan addresses USEPA comments (per letters, emails and discussions) on the previous Conceptual Plan; however, many of those comments no longer apply since the proposed protective measures have changed.

This Work Plan is organized into the following sections:

- Summary of additional information gathered to enable evaluation of other protective measure options (Section 2.0);
- Description of the new Phase 2 protective measures/design (Section 3.0);
- Description of Phase 2 construction (Section 4.0);
- Summary of planned Phase 2 operation, monitoring, and reporting (Section 5.0); and
- Anticipated Phase 2 implementation schedule (Section 6.0).

2.0 SUMMARY OF SITE HISTORY AND ADDITIONAL INVESTIGATIONS

2.1 SITE HISTORY

For clarity, a summary of the steps leading to evaluation and implementation of additional protective measures for mitigating methane observations at the TNH property is provided here:

- 2012 - YCRG requested a meeting with USEPA. The technical parties met "to bring all stakeholders together, discuss current site conditions, acknowledge accomplishments, identify concerns, prioritize actions to address concerns, and develop a conceptual plan for moving forward on key issues" (minutes of October 2, 2012 meeting, issued November 6, 2012). At that time, the technical parties prioritized evaluation of additional protective measures for methane at the TNH property, and agreed to a phased approach. In November, the YCRG submitted the Phase 1 Conceptual Plan for the TNH building (dated November 2, 2012).

- 2013 - The YCRG collected additional data and implemented initial additional protective measures by February 2013 (e.g., new methane detectors and set points), participated in meetings/calls with USEPA, and submitted the final Phase 1 Conceptual Plan in April (dated April 25, 2013). USEPA issued conditional approval (letter dated May 22, 2013) and final approval (email dated September 10, 2013) of the Phase 1 Plan, and YCRG implemented Phase 1 in late 2013; which included:
    - Installation of six continuous methane detectors in the TNH basement; each equipped with an alarm/auto-call out system for notification of emergency conditions.
    - Sealing of the basement floor and significant cracks in the basement wall, as well as two basement sumps to eliminate potential vapor intrusion pathways.
    - Installation and monitoring of pressure taps (PTs) in the basement floor, as well as continued methane monitoring inside and outside of the TNH building.
    - In addition, during implementation of Phase 1 additional protective measures, the YCRG encountered previously unknown asbestos concerns and subsequently tested and performed asbestos abatement at several areas of TNH's basement as a goodwill measure and added benefit to TNH.

- In July 2013, YCRG submitted the Conceptual Plan Phase 2 Additional Protective Measures (dated July 24, 2013). USEPA provided comments on that plan (letter dated December 31, 2013). The comments required further discussion to clarify agency reliance on old vs. current data, misinterpretation of Illinois regulations applicable to landfill gas systems, and the presence of methane pockets vs. gas migration causing methane observations in the TNH parking lot area.

- 2014 - The YCRG submitted the Summary of TNH Phase 1 Additional Protective Measures Implementation (dated February 12, 2014). The YCRG also responded (letter dated February 14, 2014) to USEPA's comments on the Conceptual Plan for Phase 2 and met with USEPA in April 2014. USEPA issued a Conditional Approval (letter dated April 18, 2014) for the Phase 2 Additional Protective Measures, but the conditions required further technical discussion/evaluation, and YCRG provided a response in August (letter dated August 15, 2014). In October/November 2014, a new USEPA oversight contractor was assigned to this site, and technical calls/emails ensued through December resulting in new comments/talking points and conditions from USEPA (email dated November 5, 2014, and technical call on December 3, 2014) with respect to the previously conditionally approved Phase 2 Plan.

- 2015 - In February, YCRG and USEPA discussed USEPA concerns about the Phase 2 Plan, and USEPA provided further comments in March (letter dated March 10, 2015). YCRG requested clarification (letter dated March 17, 2015) of those comments, and the USEPA responded (letter dated May 20, 2015) with further conditions and requests for data. Based on further discussions and correspondence with USEPA in June 2015, it was clear that the technical parties questioned the effectiveness of the original Phase 2 Plan.

In response to the above correspondence and discussions, YCRG recommended further work at TNH and USEPA subsequently approved (letter dated June 28, 2015) that work to facilitate reevaluation of the Phase 2 Plan, which resulted in this Work Plan. USEPA, IEPA and YCRG technical parties have discussed agency comments (letter dated April 8, 2016; and call on April 14, 2016), and the corresponding changes are reflected in this Work Plan.

The key matters raised by USEPA and resolved by recent correspondence and further data collection include:

1) USEPA has noted that all parties must be comfortable that any future response actions are necessary and can be demonstrated to be effective at reducing methane in the subsurface. YCRG has repeatedly committed to implementing Phase 2 measures so long as they make technical sense and are consistent with applicable regulations and the site decision documents.

2) The historical methane database has been provided to USEPA (email June 26, 2015, and updated version August 31, 2015), and the data trends demonstrate that methane levels have in fact decreased over time at the majority of probes in the TNH parking lot area, and some probes exhibit fluctuating data trends. However, current monitoring data i.e., within the last year, demonstrate that methane is present at levels above 50% of the lower

explosive limit (LEL) in only a few gas probes in the TNH parking lot area. The current data/current site conditions should be used for protective measures decision-making.

3) The design of the landfill cap, the operation of the Yeoman Creek Landfill (YCL) gas collection system, the operation of the Lovinger Gas Collection System (LGS), the slurry wall along the LGS, and the presence of saturated and low permeability soils and high water table all combine to form a significant barrier to migration of methane from the landfill to the TNH property. Landfill methane would need to build significant pressure to overcome the barriers put in place between YCL and the TNH property for landfill gas migration to occur. If this were to happen, the landfill gas would manifest itself in other areas such as the YCL gas collection system, or LGS, which has not been the case. There has also been no evidence of surface emissions such as stressed/dead cap vegetation or bubbles (escaping landfill gas) in saturated soils. Gas migration is not a plausible theory based on methane observations. However, these methane observations do provide evidence that residual gas is trapped in pockets below the water table in remaining construction debris and slowly finds a pathway to areas of lower pressure such as a gas probe. Also, because the majority of the parking lot gas probes are installed in a "clay plug"[1] and only partially in the vadose zone, the methane data for those probes may provide a false representation of methane presence in that area, under high water table conditions. Some of the screens of the current probes are usually submerged, and thus methane concentrations in the probe headspace may not reflect equilibrium soil gas concentrations in the vadose zone. The methane here likely has low mobility because of the low permeability of the soil in the clay plug. Properly installed replacement probes are planned as part of the Phase 2 measures.

4) Methane has not been detected inside the TNH building, and Phase 1 additional protective measures have eliminated the potential for methane vapor intrusion into that building. Monitoring of TNH sumps, drains, and pressure taps shows that methane is not volatilizing below the basement floor at any levels of concern. It also shows that methane observed in the parking lot is present in localized pockets that are not significant enough in size/areal extent, or are not under pressured conditions that would result in migration to the TNH building, or to the existing gas extraction system, i.e., the TNH parking lot (311R) system, located south and east of the building near LFG311R. There is no evidence that such residual methane poses a physical hazard, because while methane levels exceed 50% of the LEL in some locations, they can only pose a physical hazard if conditions include a confined space, appropriate oxygen levels, and an ignition source.

[1] The term "clay plug" refers to the very low permeability material placed as backfill in the parking lot area after prior excavation work during 2004-2005.

5) The clay plug limits the effectiveness of the LGS and 311R extraction systems. Removing the clay plug and replacing it with a higher permeable material (gravel/sand mix) will provide a more permeable flow pathway for any residual methane pockets or methane that may be volatilizing from the construction debris layer or groundwater beneath the TNH parking lot area. The volatized/released methane will be removed via existing or proposed extraction piping and will be monitored using appropriately installed replacement probes screened in the vadose zone.

2.1 PARKING LOT SOIL BORING AND SAMPLING

A supplementary soil investigation was performed in the TNH parking lot to verify subsurface conditions and to evaluate the chemical constituents of the TNH parking lot soil. The purpose of the laboratory analyses was to determine if the soil excavated from the parking lot during Phase 2 construction would be suitable for use as grading material on the East Yeoman Creek Landfill (East YCL), or suitable for disposal in a clean construction and demolition debris (CCDD) landfill or a Subtitle D landfill (non-hazardous landfill).

In August 2015, five soil borings were completed in the TNH parking lot utilizing direct push methods. The locations of the borings are presented in Drawing C100 and are identified as SB-1A through SB-5A. The borings were completed to the top of the construction debris layer or the bottom of the clay plug where the construction debris layer had been previously removed. Soil borings SB-1A through SB-3A were completed in the clay plug area and were all completed to a depth of 15 feet below ground surface (BGS). The depth to the construction debris layer ranged from 11 feet BGS at SB-2A to 15 feet BGS at SB-1A. Soil boring SB-4A was completed approximately 15 feet northwest of LFG326R, was terminated at a depth of 10 feet BGS, and the debris layer was encountered at 7.5 feet BGS. SB-5A was completed approximately 10 feet south of LFG311R, was terminated at a depth of 15 feet BGS, and the debris layer was encountered at 15 feet BGS. A track mounted Geoprobe® rig (Model MC5) was utilized to complete the borings and soil was continuously sampled using 60-inch sample liners. A representative sample was collected from the dominant soil zone at each boring, bagged, packed with ice in a cooler, and sent to TestAmerica Laboratories, Inc. for analysis of the list of constituents per the maximum allowable concentrations (MAC) table for disposal at CCDD landfills in Illinois, and for comparison to the Tier I Residential Soil Remediation Objectives per the Illinois Tiered Approach to Corrective Action (TACO) standard. While the TACO objectives are not applicable or relevant and appropriate requirements (ARARs) per the Record of Decision (ROD); they were used as a guide for evaluating soil reuse on the landfill given that they are protective of residential human health. All cuttings were disposed of in the boring locations and any remaining space was filled with bentonite granules. Asphalt cold patch was used to fill the holes in the parking lot asphalt.

Logs for the soil borings are provided in Appendix A and the laboratory analytical report is provided in Appendix B. In summary:

- This effort yielded no significant changes in subsurface interpretations from prior investigations in this area. Updated cross sections are provided in Drawings C101 through C103.
- The samples were generally collected at depths between 6 feet and 8 feet BGS. The material in the clay plug (SB-1A through SB-3A) was consistently a brown silty clay with high plasticity; and soil in the other borings (SB-4A and SB-5A) was predominantly a silty clay (reddish brown to gray) with some sand, gravel, and some non-putrescible waste used for fill (cinders, brick, etc.).
- The elevation of the construction debris layer varied from 7.5 feet BGS at SB-4A to 15 feet BGS at SB-5A.
- Only one soil boring (SB-3A) in the parking lot showed water levels greater than 1 foot after completion; the rest were either dry or had less than 1 foot of water. Based on this observation, the water table observed in gas probes LFG326R-LFG329R may be artificially higher than the actual water levels in the parking lot area. These artificially high readings may be caused by groundwater congregating in the gas probes and clay soils that drain poorly.
- A few samples exceeded the MACs for iron and/or manganese; therefore, the excavated soils cannot be disposed at a CCDD landfill, but could be disposed at a Municipal Solid Waste (MSW) landfill.
- Alternately, because all soil samples met the TACO Tier I Residential Soil Remediation Objectives excavated soils may be placed onto the East YCL and would not pose any risk for residential or construction worker receptors. Comparison of the soil analytical results to the TACO Tier 1 soil remediation objectives is provided in Table 1.

Based on the soil sampling analytical results, TNH parking lot soil excavated as part of the Phase 2 protective measures can be placed on East YCL.

2.2 BACKYARD GAS PROBE INSTALLATION

For nine years, data for gas probes LFG312 and LFG219 located in the TNH backyard at close proximity to the landfill have not shown methane above 50% of the LEL. During a 2011 subsurface investigation, seven soil borings were completed to the saturated construction debris layer in the backyard. Gas readings acquired from the open boreholes showed methane levels above 50% of the LEL. Those borings were advanced through the construction debris layer; therefore, the data from those locations was not representative of the vadose zone, but indicates the presence of pockets of methane in the saturated construction debris. In August 2015, three additional gas probes, LFG340 through LFG342, were installed in the backyard closer to the

TNH building than existing probes LFG312 and LFG219 to verify the presence or absence of methane in the vadose zone near those former soil borings. The new probes were intended to demonstrate whether methane is present at levels of concern in the vadose zone at the TNH backyard.

The three new gas probes were installed in the backyard near the location of former soil borings that showed elevated levels of methane during the 2011 Backyard Subsurface Investigation. The new probes were installed as proper methane monitoring devices pursuant to 35 IAC 811.310(b), and screened in the vadose zone above the top of the groundwater table in accordance with 35 IAC 811.310(b)(2). The locations of the gas probes are presented in Drawing C100 and are identified as LFG340 (west) through LFG342 (east). The gas probe borings were completed to the top of the water table based on the saturated level of soil at the bottom of the sample tube. A track mounted Geoprobe® rig (Model MC5) was utilized to complete the gas probe borings and soil was continuously sampled using 60-inch sample liners. Gas probes were installed in the boring annulus immediately after boring completion and were finished as flush mount monitoring devices.

Logs for the soil borings and as-builts for the gas probes are provided in Appendix C. In summary:

- Like original backyard gas probes LFG219 and LFG312, observations from new gas probes LFG340 through LFG342 installed in the backyard in late August, 2015 have shown no methane above 50 percent of the LEL. These new probes are monitored weekly, and results generally show no methane detection or levels well below 50% of the LEL. The highest reading was 4% (0.2% methane) of the LEL at LFG341 on September 3, 2015.
- Water was observed in LFG341 several days after installation; the other two probes were dry. The water level in LFG341 was observed below the top of the screen; the portion of the screen above the water table is located in the vadose zone and LFG341 meets the construction requirements listed in 35 IAC 811.310(b).
- Results from gas probes LFG219, LFG312, and LFG340 through LFG342 are representative of conditions within the vadose zone, and show that methane is not migrating in the vadose zone of the backyard. Therefore, no additional protective measures are necessary in the TNH backyard.

3.0 REVISED PHASE 2 DESIGN

3.1 GENERAL

The new design for Phase 2 additional protective measures for the TNH parking lot area is listed in general terms below, and further details for each item are provided in the following subsections:

- Excavation of a large portion of the TNH parking lot area and installation of highly permeable backfill in the excavated area;
- Replacement of gas monitoring probes located in the excavation area;
- Installation of the "TNH Gas System" to enable passive and/or active operation of soil vapor extraction (SVE), consisting of the following:
    - new perforated piping and vent stacks in the parking lot area;
    - reconfiguration of the existing TNH parking lot (311R) extraction system piping; and
    - new piping and flanged caps to facilitate future connections to active SVE equipment, if deemed necessary; and
- Placement of excavated soils on low lying areas of the East YCL.

No protective measures are necessary or planned for the TNH backyard area since all gas monitoring probes in that area demonstrate methane is not present in the vadose zone at any levels of potential concern. However, continued monitoring of gas probes in the backyard will continue per the USEPA approved Long-Term Monitoring Plan (LTMP).

3.2 PARKING LOT SOIL EXCAVATION AND PROBE REPLACEMENT

The probes with recent methane observations above 50% of the LEL are located in the clay plug; these probes are LFG326R through LFG331R. The clay plug was the result of abandonment of an existing gas extraction trench and partial excavation of construction debris in the TNH parking lot area (in 2004-2005), and is the moniker given to the low permeability material used to backfill that excavation. Because of the low permeability soil conditions in these areas, and because the majority of these parking lot gas probes are installed in the clay plug and only partially in the vadose zone, their screens may become submerged and provide a false representation of methane presence in that area under high water table conditions. Due to low permeability of the clay plug, methane likely has low mobility in that area. The effectiveness of any soil vapor extraction installed in these areas would be limited due to the low permeability of the material.

Removing the clay plug and replacing with a more permeable material such as gravel would significantly enhance the performance of any proposed Phase 2 gas extraction measure. It would also enhance the performance of the LGS and the 311R extraction system. Replacement of gas probes in this area with properly constructed monitoring devices in the vadose zone per 35 IAC 811.310(b) will ensure proper monitoring of methane in the vadose zone whether from residual methane trapped in the subsurface and/or volatizing from the construction debris layer or groundwater.

The proposed limits of the TNH parking lot excavation are shown in Drawing C201, and include the clay plug and soil near LFG311R. Excavation depths will vary across this area as shown on Drawing C300, and will extend to the top of the construction debris layer or the bottom of the clay plug, as applicable. As shown on the cross sections presented in drawings C101 through C103, there are several areas, near SB-1, SB-2, SB-2A, and SB-3A, where the clay plug was terminated in or at the top of the construction debris layer. Near boring SB-3A, the clay plug was terminated above the top of the construction debris layer and that layer will need to be exposed there. Boring SB-4 and the log for LFG330R showed that the construction debris layer was entirely removed and, at that location, the excavation will be terminated at the bottom of the clay plug. Excavation depth will be determined based on field observations and as such, Drawing C300 provides a rough estimate of the anticipated excavation geometry. Excavated soils will be placed on existing low lying areas of East YCL and regraded/seeded as needed, as described in Section 4.3.

The excavation area will be backfilled with gravel (generally one to three inch in size) to create a more porous area for any residual methane pockets to volatilize for passive and/or active venting through new and existing (311R system and LGS) gas extraction piping, as discussed further in Section 4.4.

Gas probes LFG326R through LFG331R and LFG311R are inside the excavation limits and will be removed and replaced once backfilling has been completed. The replacement probes will be installed in accordance with 35 IAC 811.310(b) in the same manner as recent probes LFG340 through LFG342, i.e., in the vadose zone above the water table.

Additional construction details are provided in Section 4.

3.3 PASSIVE/ACTIVE GAS EXTRACTION SYSTEM

Once porous backfill is put in place, perforated piping will be installed to enable passive and/or active venting of methane in the TNH parking lot area. This piping will consist of a reconfiguration of the existing 311R extraction piping (since some will be destroyed during excavation), and use of new extraction piping. Drawings C301 and C302 show the planned

extraction piping and vents. The extraction system will consist of a series of perforated piping legs that will be individually connected to various passive vents located along the edge/exterior of the TNH parking lot. Valves connected to the passive vents will allow focused operation of one or simultaneous operation of multiple portions of the final extraction system to ensure effective operation and ease of control. In addition, this configuration will enable separate operation/restart of the reconfigured 311R extraction system, if necessary.

Additional piping will be connected to each extraction leg and will be terminated east of LFG330R, and the LGS trench at the locations shown on Drawing C301. This piping can be connected to a vacuum source to convert the system from passive to active operation if applicable, as discussed in Section 5.2. A preliminary layout of the equipment building and process diagram for active operation are detailed in Drawings C302, C803, and C804.

3.4 REUSE OF EXCAVATED SOILS

The soils excavated from the TNH parking lot area will be placed at selected areas on East YCL. Based on analytical results from soil samples acquired during August 2015, soil removed during the Phase 2 parking lot excavation will meet the TACO Tier 1 soil remediation objectives for residential receptors. As noted above, the TACO objectives are not ARARs which YCRG is required to meet, but were selected for use since they are the most conservative remediation objectives for soil used by the IEPA, and meeting this standard shows that placement of soil on East YCL or surrounding areas is protective of human health and the environment.

Soil removed from the parking lot will generally be used on East YCL for grading purposes. This includes, but is not limited to:

- Grading low lying areas to promote proper drainage;
- Restoring areas of high traffic where cap soils have been compacted and are not suitable for growing vegetation;
- Building up areas near the flare yard for additional operations space; and
- Construction of haul roads during TNH parking lot excavation.

Final soil placement locations will be determined in the field based on East YCL cap conditions, observed drainage around East YCL, or as deemed necessary by YCRG. Placement of soil during Phase 2 work will be documented in the construction documentation report.

4.0 PHASE 2 PROTECTIVE MEASURES CONSTRUCTION

4.1 GENERAL

The proposed Phase 2 Additional Protective Measures construction will consist of two stages, as follows:

- Stage 1 includes excavation/backfill of the clay plug area and placement of that material on low-lying areas of East YCL, installation of the TNH Gas System including new/reconfigured extraction piping and vent stacks in the excavated area and piping/stubs for future connection to active SVE equipment, and installation of replacement gas probes.

- Stage 2, if deemed necessary (as discussed below in Section 5.0) would include procurement and installation of additional piping, an equipment building, and SVE equipment, instrumentation, and controls to enable active operation of the new extraction piping installed during Stage 1. The Stage 2 construction is a contingency measure, and would only be implemented in the event the operational decision-making process developed by YCRG (with input from USEPA) indicates active SVE, beyond the 311R portion, is needed. Preliminary design and layout details for such future active components are provided in this Work Plan, (see drawings C302, C803, and C804), but such details may change as applicable to ensure timely procurement and implementation when needed.

The design drawings presented in this Work Plan show sufficient design/build details to enable construction of Stage 1 and 2. Please note that field adjustments may be necessary due to access, obstructions (trees/other), or accommodations to limit disruption of TNH's daily operations; any substantive changes would be relayed to USEPA.

4.2 PARKING LOT EXCAVATION AND BACKFILL

As discussed in Section 3.0, removal of the clay plug is a crucial aspect of the Phase 2 plan and will improve the horizontal and vertical influence and effectiveness of the LGS and the new TNH Gas System.

Drawings C201 and C300 show the proposed parking lot excavation plan and limits of excavation. The planned floor termination of excavation is the top of the construction debris layer, or the bottom of the clay plug in areas where the construction debris layer was previously removed. The area of the excavation is approximately 4,800 square feet and includes approximately 2,000 cubic yards of soil to be removed. Based on soil borings performed in the

excavation area, the depth of the excavation is planned to range from just over 8 feet at the south side of the parking lot to over 14 feet near the middle of the parking lot. The contours shown on drawing C300 may change based on field/subsurface conditions and may not represent the final excavated depths.

The planned progression of excavation is from north to south to limit impact to TNH operations. The excavation will be backfilled with 1- inch to 3-inch rounded gravel to provide an effective, porous media for TNH Gas System operation. Backfilling will begin immediately upon reaching the planned depth, and dewatering is not planned based on observations of the water table in previous excavations and borings in this area. Gravel backfill will be placed in the excavation up to the designed bottom of the piping for the TNH Gas System, and backfilling will not be completed until all system piping has been installed. Subbase for the parking lot asphalt will be placed directly above the permeable backfill and the TNH parking lot will be repaved once the area has been backfilled. Details for typical configurations of piping and backfill material are provided in C800.

The LGS is located along the east and south boundary of the planned excavation area and precautionary measures are planned to protect that system during the excavation work. Prior to initiation of parking lot excavation, the LGS will be exposed to the top of its extraction trench and the existing compacted soil and geocomposite clay liner (GCL) will be segregated for reuse (or replaced as needed) after excavation backfilling operations have been completed at TNH. During parking lot excavation, the permeable material used in the LGS extraction trench will be allowed to slough into the parking lot excavation. To limit damage to the vibrated beam slurry wall portion of the LGS, the excavation will terminate once the geotextile above the slurry wall is exposed. The excavation will be offset three feet from the slurry wall and the wall of the excavation will be sloped at a 1:1 grade to the floor. The proposed (TNH excavation) gravel backfill material will also be used to fill the exposed LGS extraction trench. LGS extraction trench piping will be protected during backfill operations. A detail depicting the excavation along the LGS after backfilling has been completed is provided on Drawing C300 for reference. Trench sections 1 and 2 of the LGS will not be operational during excavation and backfilling operations. The sections will not be operational for a period of no more than two weeks and will be brought back online as soon as possible.

4.3 PLACEMENT OF EXCAVATED PARKING LOT SOIL

As discussed in Section 2.0, laboratory analytical results show that the soil excavated in the TNH parking lot as part of the Phase 2 construction is suitable for placement on East YCL. Soil excavated from the parking lot will primarily be used to regrade low-lying areas on the East YCL cap.

Haul truck traffic will be limited to one path to reduce the amount of disturbance to the landfill cap. All regraded areas will be seeded with a similar vegetative seed mix as used for the existing cap. Any ruts or damaged areas of the cap caused by haul truck traffic will also be regraded or the soil reworked and seeded, if applicable.

4.4 INSTALLATION OF TNH GAS SYSTEM

The TNH Gas System will be comprised of the reconfigured former 311R trench system and new extraction piping installed along the path from near LFG326R to near LFG330R.

Portions of the existing 311R system perforated extraction piping (beneath the parking lot) will be removed as part of the excavation scope outlined above, and will be replaced; and the non-perforated piping/control valves (located along the west side of the TNH parking lot) connecting that system to the vacuum blower at the LGS building will be removed/rerouted and buried as shown on Drawing C301. The new/replacement perforated piping construction will be initiated once the gravel backfill has reached the designed (bottom) invert for that piping, as shown on Drawing C301 and associated details. The 311R extraction system will not be operational for a period of time during Phase 2 construction and will be brought back into normal operation as soon as possible. Approximately 800 linear feet of perforated 6-inch diameter high density polyethylene (HDPE) piping will be installed as the TNH Gas System. This layout will provide the least amount of disruption to the TNH parking lot area during operations and maintenance and will be more aesthetically pleasing to the TNH owner/residents.

Soil gas passive vents stacks (PSV) PSV-1 through PSV-4 will be connected to the piping as shown on Drawing C301 and associated details. Operation and monitoring of the PSV will be performed through valves/ports installed in the system piping or the PSV stacks. The vent stacks located at the edges of the TNH parking lot (e.g., PSV-3 and PSV-4) may be combined with architectural features such as fence posts or lampposts to hide the stacks. The stacks will be constructed of polyvinyl chloride (PVC) and a turbine may be installed on each to enhance vapor venting/extraction, as shown on Drawing C801.

A flanged connection will be installed at the TNH Gas System header piping outside the parking lot (east of LFG330R) and stubbed above ground (east of the LGS) for future contingency use (i.e., connection to active SVE equipment if deemed necessary as discussed above and in Section 5.0). The TNH Gas System vacuum piping will be installed below ground from that stubbed flange connection through the LGS as shown on Drawing C802 with separate legs of pipe extending across the parking lot from about LFG330R to LFG326R to enable passive and/or active operation, and a new vacuum header pipe connecting to the replaced 311R perforated piping for active operation of that leg. Details for the TNH Gas System piping are provided in Drawings C301 and C800 through C802.

4.5 INSTALLATION OF REPLACEMENT GAS PROBES

Gas probes LFG311R, LFG326R, LFG327R, LFG328R, LFG329R, LFG330R, and LFG331R will be destroyed during parking lot excavation. All probes will be replaced within ten feet of the original location and will be installed in conformance with 35 IAC 811.310. The probes will be constructed to monitor the vadose zone as discussed in Sections 2.0 and 3.0.

The installation of the replacement probes will be completed within one week of parking lot restoration/backfill completion. This should allow time for the water table to equilibrate and provide an accurate reading for the water table at the replacement gas probe locations. Replacement gas probe as-built diagrams will be provided with the construction documentation report. A typical gas probe detail is provided in Drawing C801. Manholes or vaults may be installed at proposed replacement probe locations (based on field decision) to allow installation of the replacement gas probes without damaging the newly installed asphalt.

4.6 RESTORATION ACTIVITIES

Asphalt parking removed or damaged during Phase 2 construction will be replaced with new aggregate subbase and asphalt. Any vegetated areas of TNH property damaged during Phase 2 construction activities will be reworked/regraded if necessary, and mulched and seeded. Areas on the East YCL cap disturbed during soil placement or hauling will be restored as discussed in Section 4.3. Any fencing removed or damaged will also be re-installed or replaced prior to construction completion. All restoration activities will be summarized in the construction documentation report.

4.7 CONSTRUCTION OVERSIGHT AND DOCUMENTATION

A formal construction quality assurance plan is not needed for the Phase 2 work, as construction will be performed on a design/build basis as previously agreed by USEPA. All work will be performed in accordance with general safe practices and regulations. CEC will provide construction management, oversight and documentation during all Phase 2 construction activities. A summary of construction activities, as-built details, and changes/deviations from the approved design (if any) will be included with construction documentation report.

4.8 HEALTH AND SAFETY

All construction activities will be performed in general accordance with the site-wide Health and Safety/Contingency Plan (HASCP). CEC's Project Engineer or designee will act as the On-site Health and Safety Officer and Field Team Leader, as defined in the HASCP. All personnel will be OSHA 40-hour HAZWOPER trained, and will be enrolled in a medical monitoring program.

Construction and oversight activities will be performed in Level D personal protective equipment. Ear protection will be used near heavy equipment while in operation.

A copy of the HASCP with emergency contacts and hospital route map will be on-site at all times during Phase 2 construction.

5.0 PHASE 2 PROTECTIVE MEASURES OPERATION

5.1 GENERAL MONITORING AND REPORTING

Baseline gas and pressure/vacuum readings will be recorded from the TNH Gas System sample ports/gauges, and the gas probes in the TNH parking lot upon construction completion. Routine gas probe monitoring will continue during operation of the TNH Gas System in accordance with the current methane monitoring portion of the LTMP (as submitted to USEPA with the letter dated September 22, 2015), copy attached as Table 2. Monitoring data and system performance will be summarized in routine Annual Reports (or applicable bimonthly progress reports) submitted for this site.

In summary, the planned methane monitoring program for the TNH area, as outlined in the LTMP, includes the following:

- Nine probes and one riser pipe will be monitored two times per week;
- Seven probes and the five PSVs will be monitored weekly;
- Six PTs (inside the TNH basement) will be monitored monthly; and
- Eight methane detectors located in the TNH basement will operate continuously with alarm notification as applicable.

5.2 PERFORMANCE DECISION MAKING PROCESS

The Phase 2 additional protective measures for the parking lot area include passive and active SVE (the new legs of the TNH Gas System will operate passively), while the reconfigured 311R portion of that TNH Gas System will initially be active. The decision making process for operational adjustments to the TNH Gas System is outlined below. This process was developed by the YCRG with collaboration from USEPA technical parties, and includes a stepwise, logical approach for determining effectiveness of the Phase 2 measures, the appropriateness of changes (more or less) to the methane monitoring plan for this area, and the need for changes from passive to active operation or vice versa.

The methane monitoring plan is part of the site LTMP and has previously been approved by USEPA. That plan includes methane monitoring at various location at the TNH property with frequencies ranging from two times per week to monthly. Following construction completion of the Phase 2 Stage 1 measures, the planned operation and periodic adjustments would include:

1) Initial operation - the reconfigured 311R portion of that TNH Gas System will be online (active), and the new legs of the TNH Gas System will be offline (passive).

2) Adjustments - the routine methane data will be evaluated and operational adjustments proposed to USEPA/IEPA as applicable. It is not possible to capture in this Work Plan all scenarios that could trigger an adjustment in operation or monitoring, but several example scenarios are outlined below:
    a. If methane data for the first 6-months following startup (or restart of an inactive portion) of the new TNH Gas System is below 50% of the LEL at LFG-218R, LFG-310 and all parking lot probes (i.e., those in paved areas), the YCRG will recommend switching any active portions of the TNH Gas System to passive mode. YCRG would continue to monitor methane after the deactivation and methane levels at all parking lot probes must remain below 50% of the LEL for a period of two years before system decommissioning could be requested. Pending the observations from post-deactivation methane monitoring, the monitoring plan may be modified, or part or all of the TNH Gas System may be reactivated, subject to review/discussion with USEPA/IEPA.
    b. If methane data for the first 6-months following startup (or restart of an inactive portion) of the new TNH Gas System is below 50% of the LEL at most but not all of the parking lot probes, and those exceptions show stable or decreasing methane trends, the YCRG may recommend switching any active portions of the TNH Gas System to passive mode. YCRG would continue to monitor methane after the deactivation, and methane levels at all parking lot probes must remain below 50% LEL for a period of two years before system decommissioning could be requested. Pending the observations from post-deactivation methane monitoring, the monitoring plan may be modified, or part or all of the TNH Gas System may be reactivated, subject to review/discussion with USEPA/IEPA.
    c. If methane data for the first 6-months following startup (or restart of an inactive portion) of the new TNH Gas System is not below 50% of the LEL at all or most parking lot probes, and those probes exhibit stable or increasing methane trends, the YCRG would recommend switching passive portions (or all) of the TNH Gas System to active mode.[2] The YCRG would continue methane monitoring following the operational change. Pending the observations from post-reactivation methane monitoring, the monitoring plan may be modified, or further operational changes to the TNH Gas System may be needed, subject to review/discussion with USEPA/IEPA.

[2] Note that activation of the new legs of the TNH Gas System will require completion of the Stage 2 construction steps outlined in Section 4 above, and approximately six months from identification of need to startup, for equipment procurement and installation, and construction of piping connections from Stage 1 stub-outs to equipment.

3) Decommissioning - in the event the Phase 2 measures and adjustments (as described above) achieve the objective of reducing parking lot methane to below 50% of the LEL, and such levels have been maintained/demonstrated for a two-year period, then YCRG will request approval to deactivate and decommission the TNH Gas System.

4) Reevaluation of Protective Measures - in the event the Phase 2 measures and adjustments (as described above) do not achieve the objective of reducing parking lot methane to below 50% of the LEL, then an overall reevaluation of protective measures will be performed. That reevaluation would include the following:
    a. Evaluate the benefit/cost of continued operation (passive or active) of the TNH Gas System versus the risk posed by any remaining methane levels.
    b. Evaluate feasibility of other potential protective measures (if any).
    c. If applicable, document technical impracticability of further operation or other measures, and allow methane to dissipate through natural attenuation.

The approach outlined above will enable YCRG to demonstrate performance of the TNH Gas System (passive and/or active). The initial operating plan and monitoring schedule enables evaluation of performance over a full range of seasonal conditions. The operational cycle durations for subsequent steps following system adjustments (if any), are sufficient based on our experience with SVE systems and consistent with industry standards for evaluation of performance, rebound, and limits of effectiveness. Durations of the period(s) of passive and/or active operation may be changed/extended if methane monitoring data convincingly suggest such changes are applicable.

As discussed with USEPA/IEPA, the operational decision making process is a tool to demonstrate TNH Gas System performance and enable timely adjustments or closure/decommissioning of the Phase 2 protective measures. The process should guide decision making, and may need to be reevaluated during the life of this project based on real-time observations or changes in site conditions.

6.0 PHASE 2 IMPLEMENTATION SCHEDULE

The anticipated implementation schedule for the Phase 2 additional protective measures outlined in this Work Plan is provided in Table 3. This schedule assumes that installation of Stage 1 of the proposed protective measure will begin during mid-2016. The schedule is subject to obtaining timely approvals from USEPA/IEPA, as well as cooperation from the TNH property owner/operator for construction logistics and minimal disruption of daily activities, and weather. Shutdown of the LGS sections in the parking lot excavation area and the 311R extraction system will occur during excavation and backfilling operations. Those systems will not be operational for approximately one to two weeks. The total estimated duration of Stage 1 construction is one month, and field changes may be required to accommodate TNH daily operations and property ingress/egress.

DESIGN DRAWINGS

YEOMAN CREEK LANDFILL SUPERFUND SITE
TERRACE NURSING HOME (TNH)
PHASE 2 ADDITIONAL PROTECTIVE MEASURES
WAUKEGAN, ILLINOIS

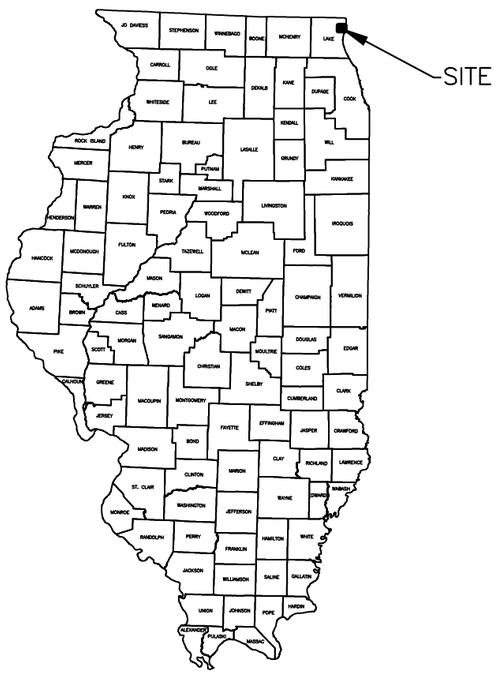

LOCATION OF SITE IN ILLINOIS
N.T.S.

NORTH

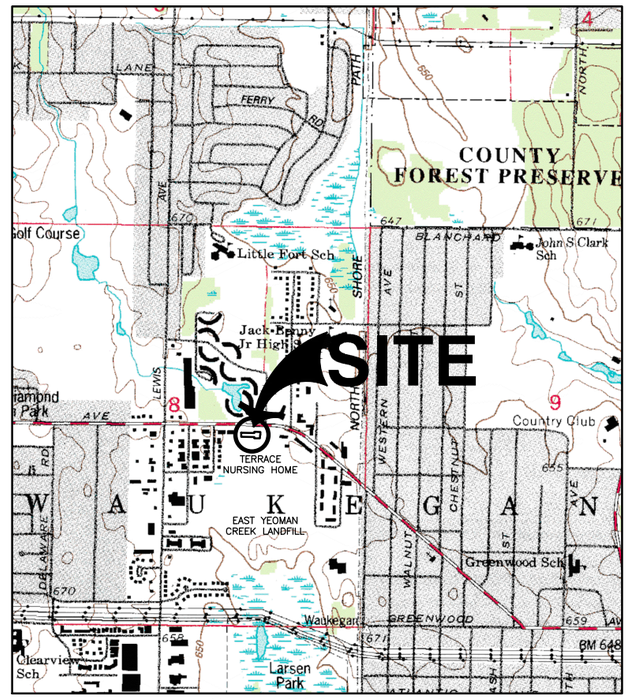

SITE LOCATION MAP
N.T.S.

THE TERRACE NURSING HOME SITE IS LOCATED AT 1615 SUNSET AVENUE IN THE CITY OF WAUKEGAN, ILLINOIS.

COUNTY:	LAKE
CITY OR TOWNSHIP:	CITY OF WAUKEGAN
TOWNSHIP, RANGE:	T45N, R12E
SECTION & 1/4 SECTION:	SE 1/4 OF SECTION 8

LIST OF DRAWINGS

DRAWING NUMBER	TITLE
C000	TITLE SHEET
C100	GEOLOGIC SECTION LOCATIONS
C101	GEOLOGIC CROSS SECTION A–A'
C102	GEOLOGIC CROSS SECTION B–B'
C103	GEOLOGIC CROSS SECTION C–C'
C200	TNH EXISTING PROPERTY FEATURES
C300	PROPOSED PARKING LOT EXCAVATION PLAN
C301	PROPOSED PHASE 2 SYSTEM LAYOUT (PASSIVE)
C302	FUTURE PHASE 2 SYSTEM LAYOUT (ACTIVE)
C800	DETAIL SHEET I
C801	DETAIL SHEET II
C802	DETAIL SHEET III
C803	FUTURE EQUIPMENT BUILDING LAYOUT AND SPECIFICATIONS
C804	FUTURE P&ID SOIL VAPOR EXTRACTION
C001	TECHNICAL SPECIFICATIONS

Call Before You Dig JULIE ILLINOIS ONE-CALL SYSTEM

ILLINOIS LAW REQUIRES ANYONE DIGGING TO CALL JULIE AT 1–800–892–0123 AT LEAST 48 HOURS/TWO WORKING DAYS PRIOR TO THE START OF EXCAVATION AND THE PROJECT MUST BEGIN WITHIN 14 CALENDAR DAYS FROM THE CALL.

*HAND SIGNATURE ON FILE

CEC
Civil & Environmental Consultants, Inc.
555 Butterfield Road, Suite 300 - Lombard, IL 60148
630-963-6026 · 877-963-6026
www.cecinc.com

YEOMAN CREEK LANDFILL
PHASE 2
ADDITIONAL PROTECTIVE MEASURES
WAUKEGAN, ILLINOIS

TITLE SHEET

DRAWN BY:	RJF	CHECKED BY:	AMK	APPROVED BY:	BRH*	DRAWING NO.:	C000
DATE:	DECEMBER 2015	DWG SCALE:	NOT TO SCALE	PROJECT NO:	121-067		

P:\2012\121-067\-CADD\Dwg\SW02-Phase II-Construction Set-11X17\121067-C000-Title Sheet.dwg{C000} LS:(12/3/2015 - aknueger) - LP: 12/21/2015 2:22 PM

NORTH

LEGEND:

- EXISTING GAS SYSTEM PIPELINE
- EXISTING GAS SYSTEM TRENCH
- EXISTING LOVINGER GAS COLLECTION SYSTEM
- EXISTING PAVED AREA
- EXISTING FENCE
- LFG306 — EXISTING GAS PROBE LOCATION
- SB-1A — EXISTING SOIL BORING LOCATION
- WB-11 — EXISTING WASTE BORING LOCATION

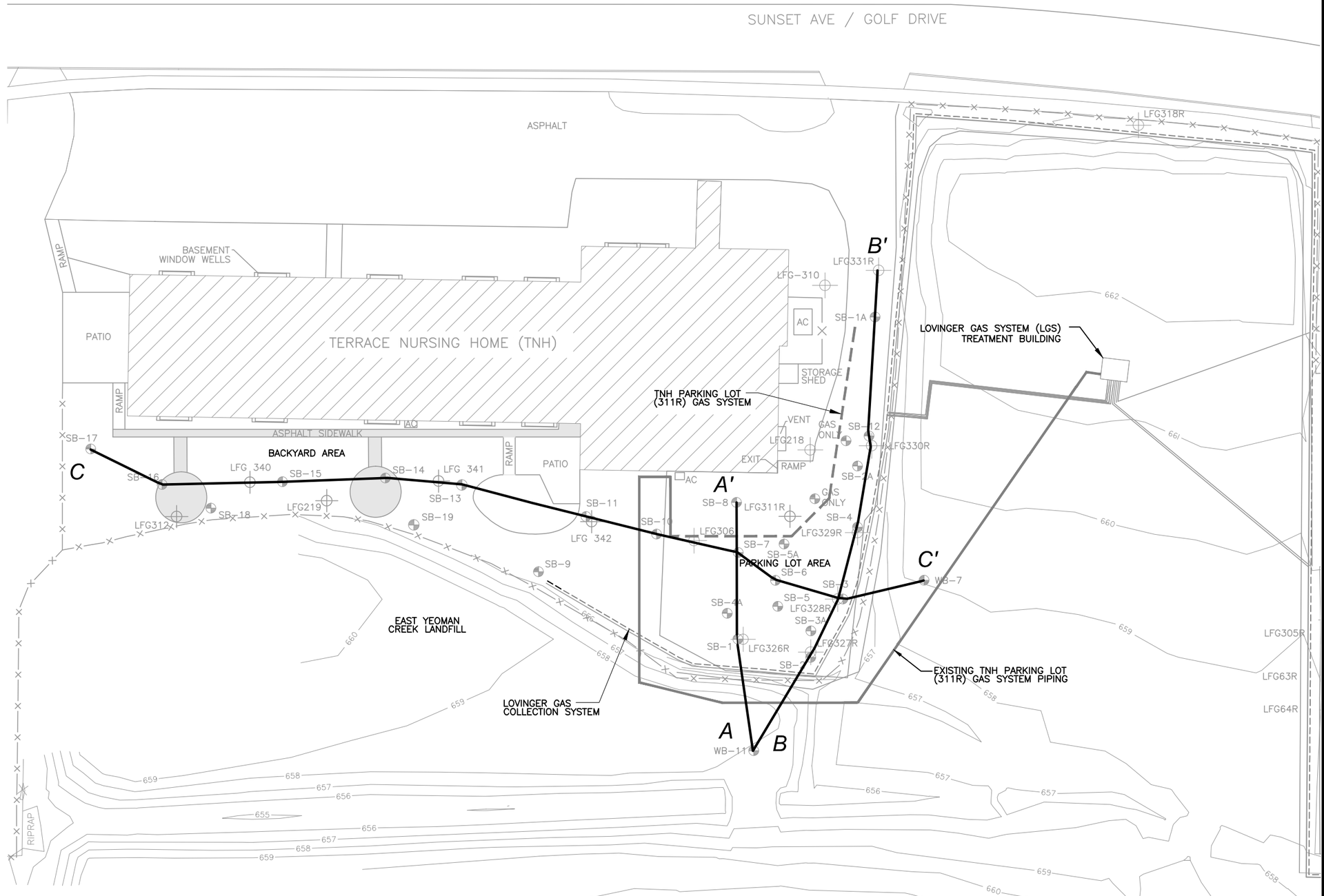

SCALE IN FEET

0 40 80

*HAND SIGNATURE ON FILE

REFERENCE

SOIL BORING LOCATION MAP DRAWING 174031-F1 PREPARED BY aetherdbs
DATED: JUNE 10, 2011.

CEC
Civil & Environmental Consultants, Inc.
555 Butterfield Road, Suite 300 - Lombard, IL 60148
630-963-6026 · 877-963-6026
www.cecinc.com

YEOMAN CREEK LANDFILL
PHASE 2
ADDITIONAL PROTECTIVE MEASURES
WAUKEGAN, ILLINOIS

GEOLOGIC SECTION LOCATIONS

DRAWN BY:	RJF	CHECKED BY:	AMK	APPROVED BY:	BRH*	FIGURE NO.:
DATE:	DECEMBER 2015	DWG SCALE:	1"=40'	PROJECT NO:	121-067	C100

P:\2012\121-067\-CADD\Dwg\SW02-Phase II-Construction Set-11X17\121067-C100-Geologic Section Locations.dwg[C100] LS:(12/21/2015 - akrueger) - LP: 12/21/2015 2:48 PM

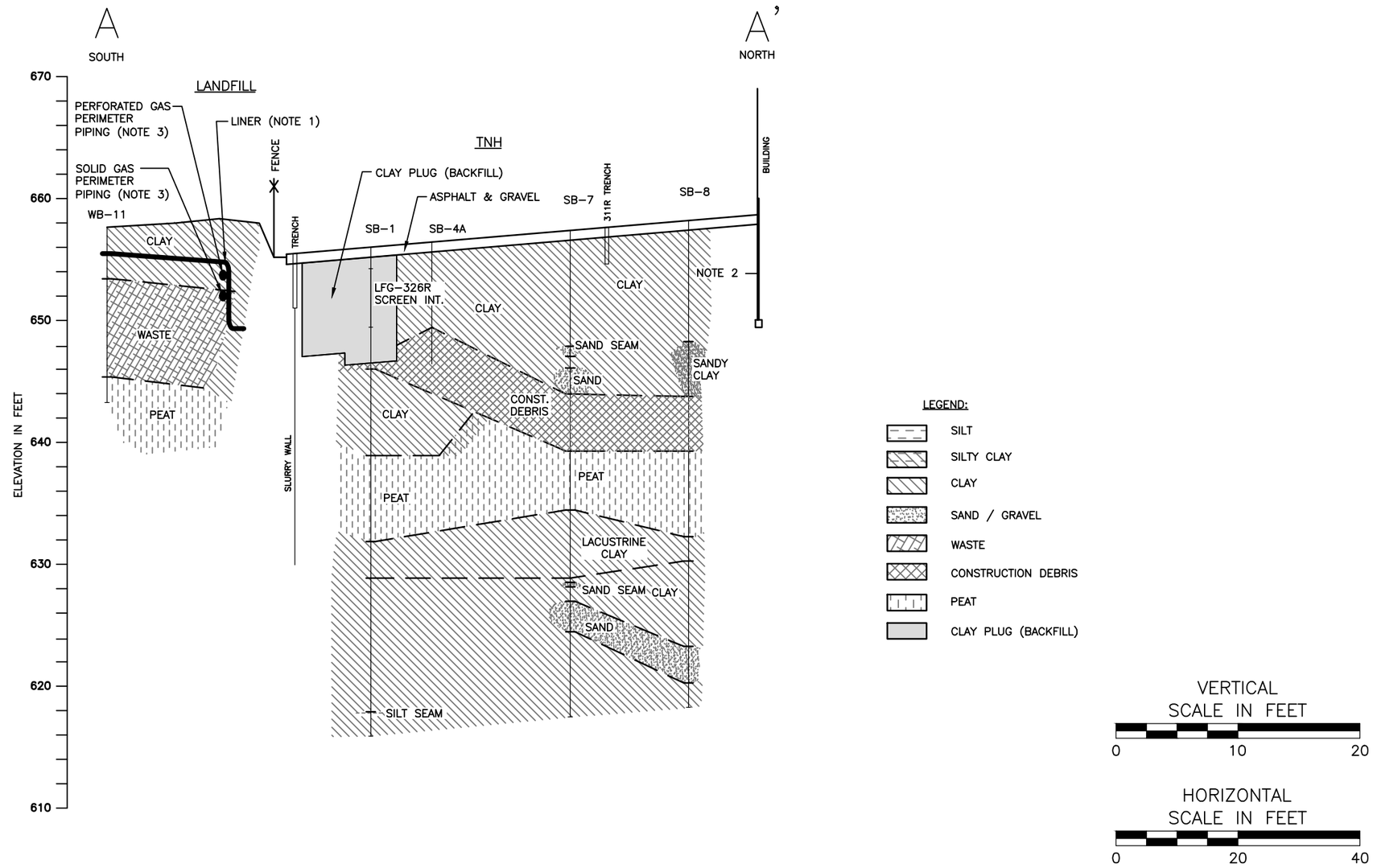

NOTES:

1. EXTENT OF LANDFILL LINER APPROXIMATED.
2. BUILDING FOUNDATION APPROXIMATED.
3. PERIMETER PIPING BASED UPON AS-BUILT DRAWINGS BY MCCLURE ENGINEERING ASSOC, DATED 1-25-06.
4. BACKFILLED CLAY FROM EXCAVATIONS IN FALL 2004.

REFERENCE

1. SOIL BORINGS LOCATION MAP DRAWING 174031-F1 PREPARED BY aether dbs DATED JUNE 10, 2011.
2. GEOLOGICAL CROSS SECTION MAP DRAWING 174031-F4 PREPARED BY aether dbs DATED AUGUST 25, 2011.

*HAND SIGNATURE ON FILE

CEC
Civil & Environmental Consultants, Inc.
555 Butterfield Road, Suite 300 - Lombard, IL 60148
630-963-6026 · 877-963-6026
www.cecinc.com

YEOMAN CREEK LANDFILL
PHASE 2
ADDITIONAL PROTECTIVE MEASURES
WAUKEGAN, ILLINOIS

GEOLOGICAL CROSS SECTION A-A'

DRAWN BY:	MSK	CHECKED BY:	AMK	APPROVED BY:	BRH*	FIGURE NO.:
DATE:	DECEMBER 2015	DWG SCALE:	AS SHOWN	PROJECT NO:	121-067	C101

P:\2012\121-067\-CADD\Dwg\SW02-Phase II-Construction Set-11X17\121067-C101-Geo Section A-A.dwg{C101} LS:(12/21/2015 - aknueger) - LP: 12/21/2015 2:49 PM

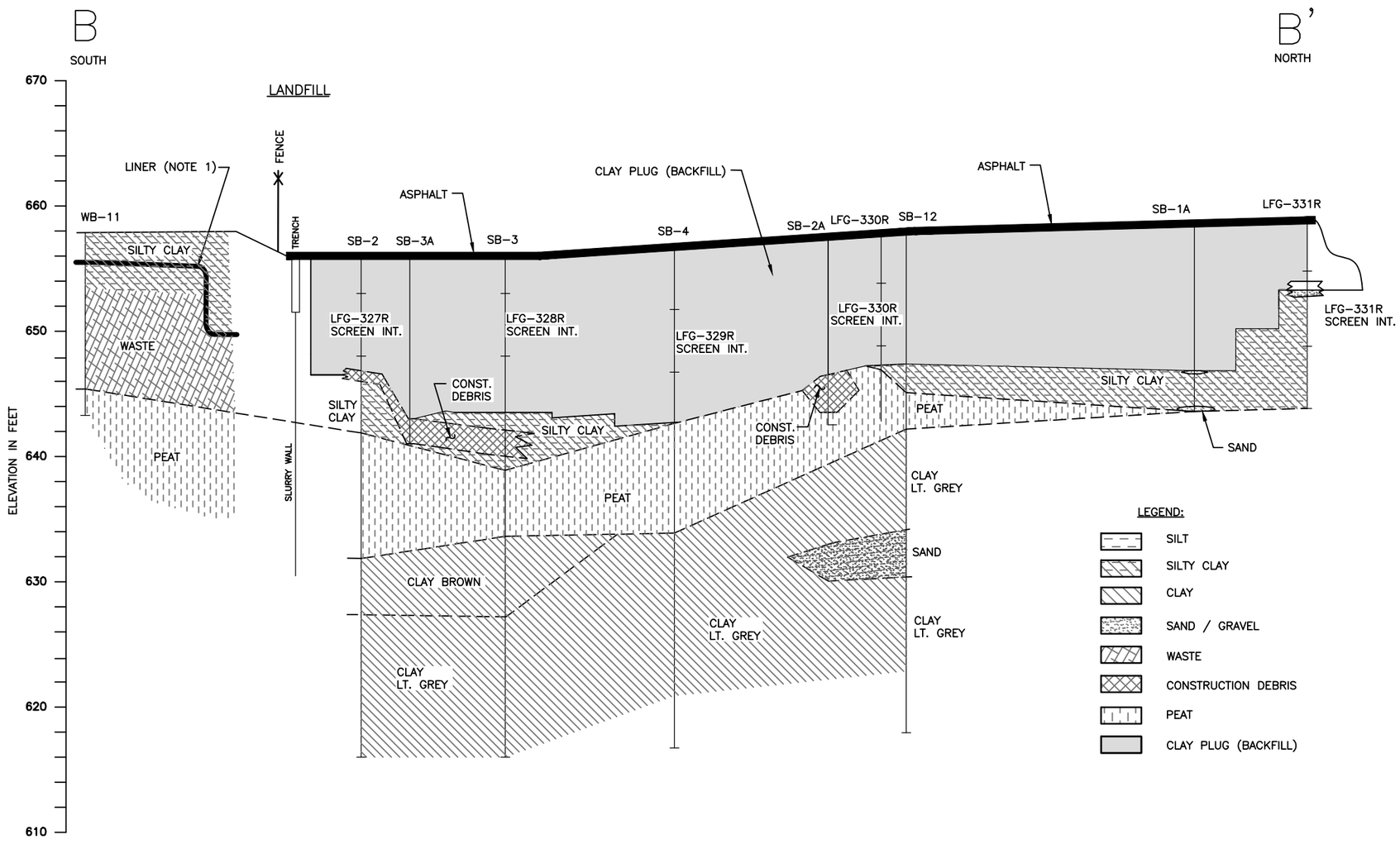

NOTES:

1. EXTENT OF LANDFILL LINER APPROXIMATED.
2. BACKFILLED CLAY FROM EXCAVATIONS IN FALL 2004.

REFERENCE

1. SOIL BORINGS LOCATION MAP DRAWING 174031-F1 PREPARED BY aether dbs DATED JUNE 10, 2011.
2. GEOLOGICAL CROSS SECTION MAP DRAWING 174031-F4 PREPARED BY aether dbs DATED AUGUST 25, 2011.

*HAND SIGNATURE ON FILE

CEC
Civil & Environmental Consultants, Inc.
555 Butterfield Road, Suite 300 - Lombard, IL 60148
630-963-6026 · 877-963-6026
www.cecinc.com

YEOMAN CREEK LANDFILL
PHASE 2
ADDITIONAL PROTECTIVE MEASURES
WAUKEGAN, ILLINOIS

GEOLOGICAL CROSS SECTION B-B'

DRAWN BY:	MSK	CHECKED BY:	AMK	APPROVED BY:	BRH*	FIGURE NO.:	C102
DATE:	DECEMBER 2015	DWG SCALE:	AS SHOWN	PROJECT NO:	121-067		

P:\2012\121-067\-CADD\Dwg\SW02-Phase II-Construction Set-11X17\121067-C102-Geo Section B-B.dwg{C102} LS:(12/21/2015 - akrueger) - LP: 12/21/2015 2:44 PM

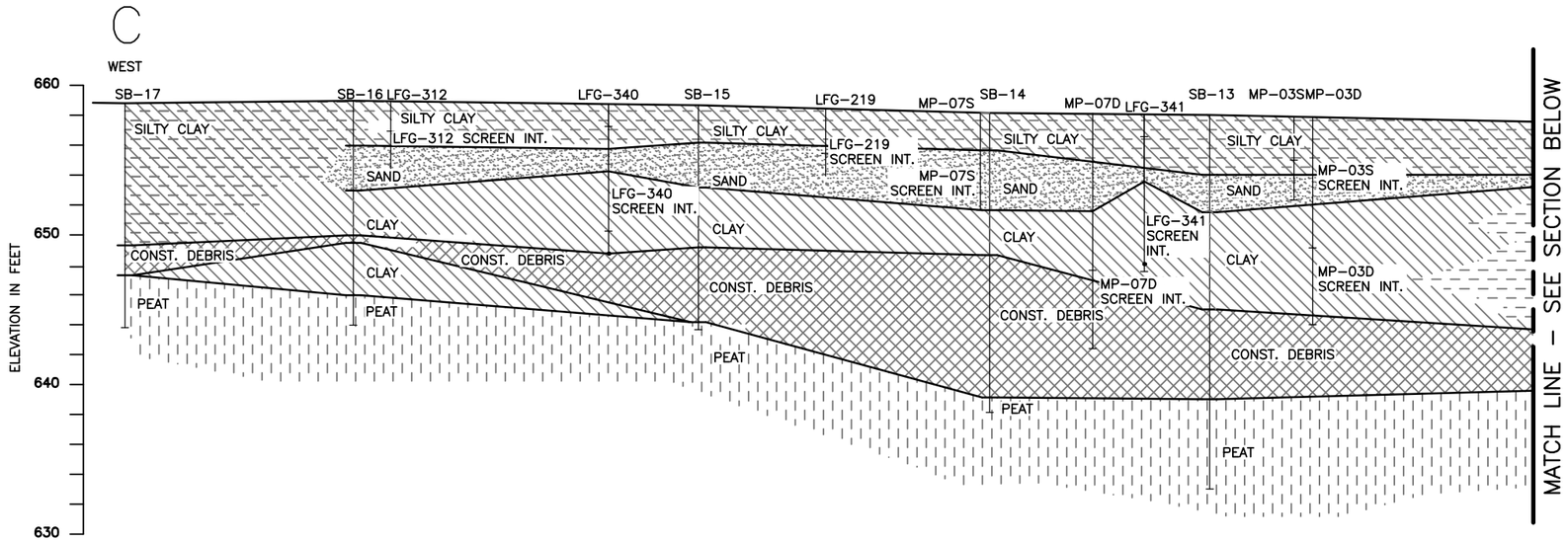

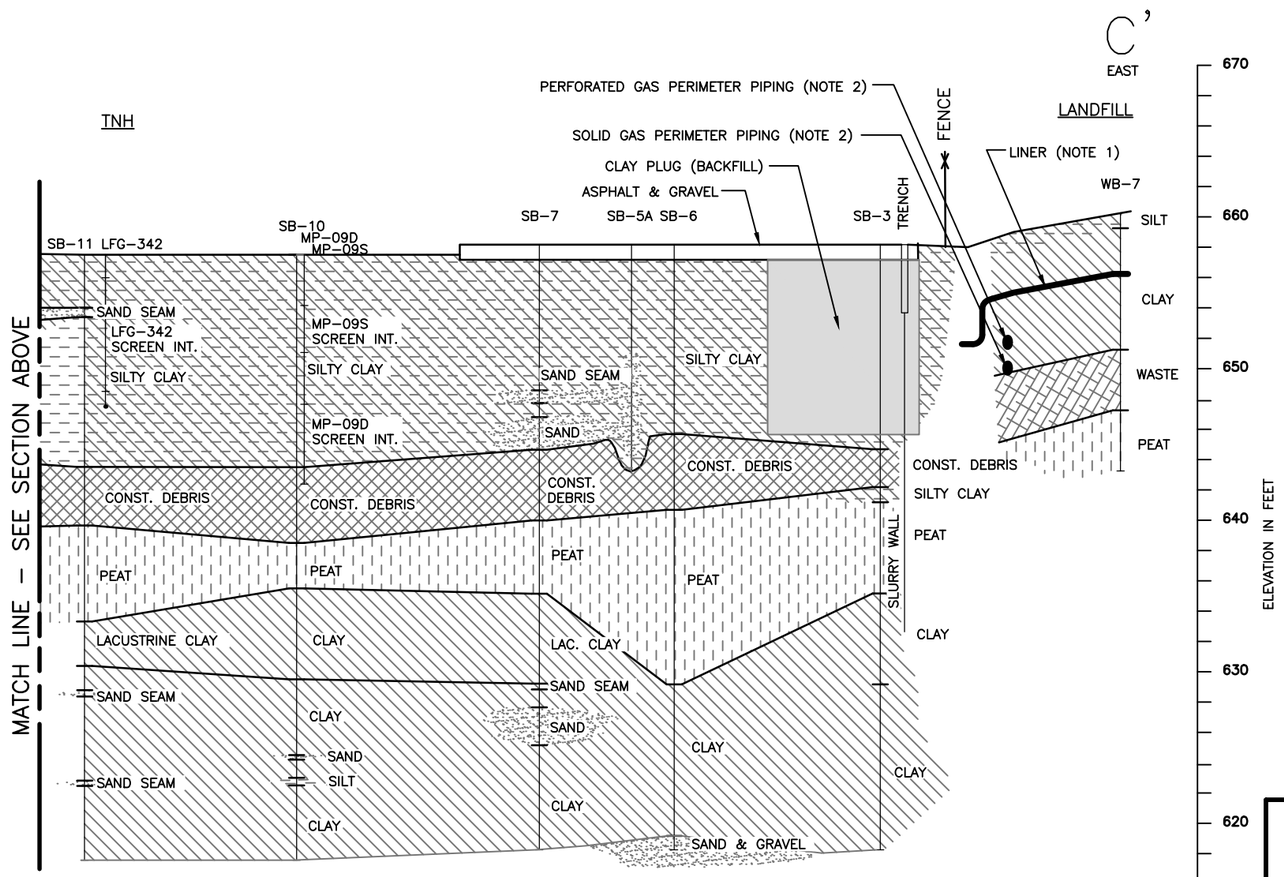

LEGEND:

- SILT
- SILTY CLAY
- CLAY
- SAND / GRAVEL
- WASTE
- CONSTRUCTION DEBRIS
- PEAT
- CLAY PLUG (BACKFILL)

VERTICAL SCALE IN FEET

0 10 20

HORIZONTAL SCALE IN FEET

0 20 40

NOTES:

1. EXTENT OF LANDFILL LINER APPROXIMATED.
2. PERIMETER PIPING BASED UPON AS-BUILT DRAWINGS BY MCCLURE ENGINEERING ASSOC, DATED 1-25-06.

REFERENCE

1. SOIL BORINGS LOCATION MAP DRAWING 174031-F1 PREPARED BY aether dbs DATED JUNE 10, 2011.
2. GEOLOGICAL CROSS SECTION MAP DRAWING 174031-F4 PREPARED BY aether dbs DATED AUGUST 25, 2011.

*HAND SIGNATURE ON FILE

Civil & Environmental Consultants, Inc.
555 Butterfield Road, Suite 300 - Lombard, IL 60148
630-963-6026 · 877-963-6026
www.cecinc.com

YEOMAN CREEK LANDFILL
PHASE 2
ADDITIONAL PROTECTIVE MEASURES
WAUKEGAN, ILLINOIS

GEOLOGICAL CROSS SECTION C-C'

DRAWN BY:	MSK	CHECKED BY:	AMK	APPROVED BY:	BRH*	FIGURE NO.:
DATE:	DECEMBER 2015	DWG SCALE:	AS SHOWN	PROJECT NO:	121-067	C103

P:\2012\121-067\-CADD\Dwg\SW02-Phase II-Construction Set-11X17\121067-C103-Geo Section C-C.dwg{C103} LS:(12/21/2015 - akrueger) - LP: 12/21/2015 3:50 PM

NORTH

LEGEND:

- MP-07 S — EXISTING SHALLOW WATER LEVEL MONITORING PROBE
- MP-07 D — EXISTING DEEP WATER LEVEL MONITORING PROBE
- EXISTING GAS SYSTEM PIPELINE
- EXISTING GAS SYSTEM TRENCH
- EXISTING LOVINGER GAS COLLECTION SYSTEM
- EXISTING PAVED AREA
- CT-12 — EXISTING CONDENSATE TRAP
- P-1W — EXISTING LGS PIEZOMETER
- CV-19 — EXISTING CONTROL VALVE
- LFG306 — EXISTING GAS PROBE
- SB-7 — EXISTING SOIL OR WASTE BORING
- EXISTING FENCE
- EXISTING BUTTERFLY CONTROL VALVE
- EXISTING SYSTEM BLIND FLANGE

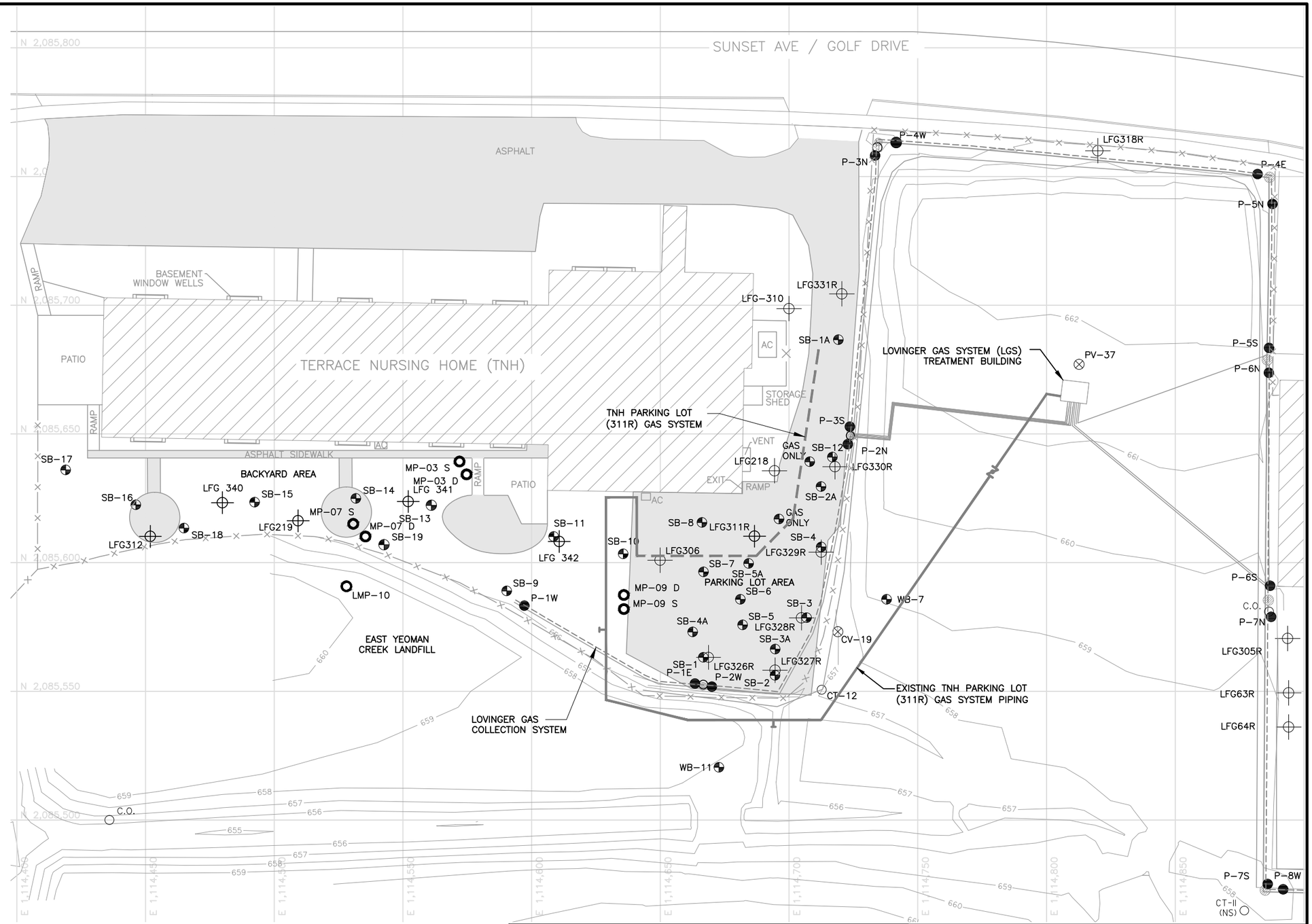

REFERENCE

1. SOIL BORING LOCATION MAP DRAWING 174031-F1 PREPARED BY aetherdbs DATED: JUNE 10, 2011.
2. SOIL BORING AND GAS PROBE LOCATIONS MAP DRAWING "C100" "ADDITIONAL BACKYARD SUBSURFACE INVESTIGATION" BY CEC; SEPTEMBER 2015.

*HAND SIGNATURE ON FILE

SCALE IN FEET
0 40 80

CEC
Civil & Environmental Consultants, Inc.
555 Butterfield Road, Suite 300 - Lombard, IL 60148
630-963-6026 · 877-963-6026
www.cecinc.com

YEOMAN CREEK LANDFILL
PHASE 2
ADDITIONAL PROTECTIVE MEASURES
WAUKEGAN, ILLINOIS

TNH EXISTING PROPERTY FEATURES

DRAWN BY:	RJF	CHECKED BY:	AMK	APPROVED BY:	BRH*	DRAWING NO.:	C200
DATE:	DECEMBER 2015	DWG SCALE:	1"= 40'	PROJECT NO:	121-067		

P:\2012\121-067\-CADD\Dwg\SW02-Phase II-Construction Set-11X17\121067-C200-TNH Property Features.DWG{C200} LS:(12/21/2015 - aknueger) - LP: 12/21/2015 4:01 PM

NORTH

LEGEND:

—10—	PROPOSED 10 FOOT EXCAVATION CONTOUR
—6—	PROPOSED 2 FOOT EXCAVATION CONTOUR
- - - - - -	EXISTING LOVINGER GAS COLLECTION SYSTEM
—×—×—×—	EXISTING FENCE
LFG306	EXISTING GAS PROBE
SB-7	EXISTING SOIL BORING

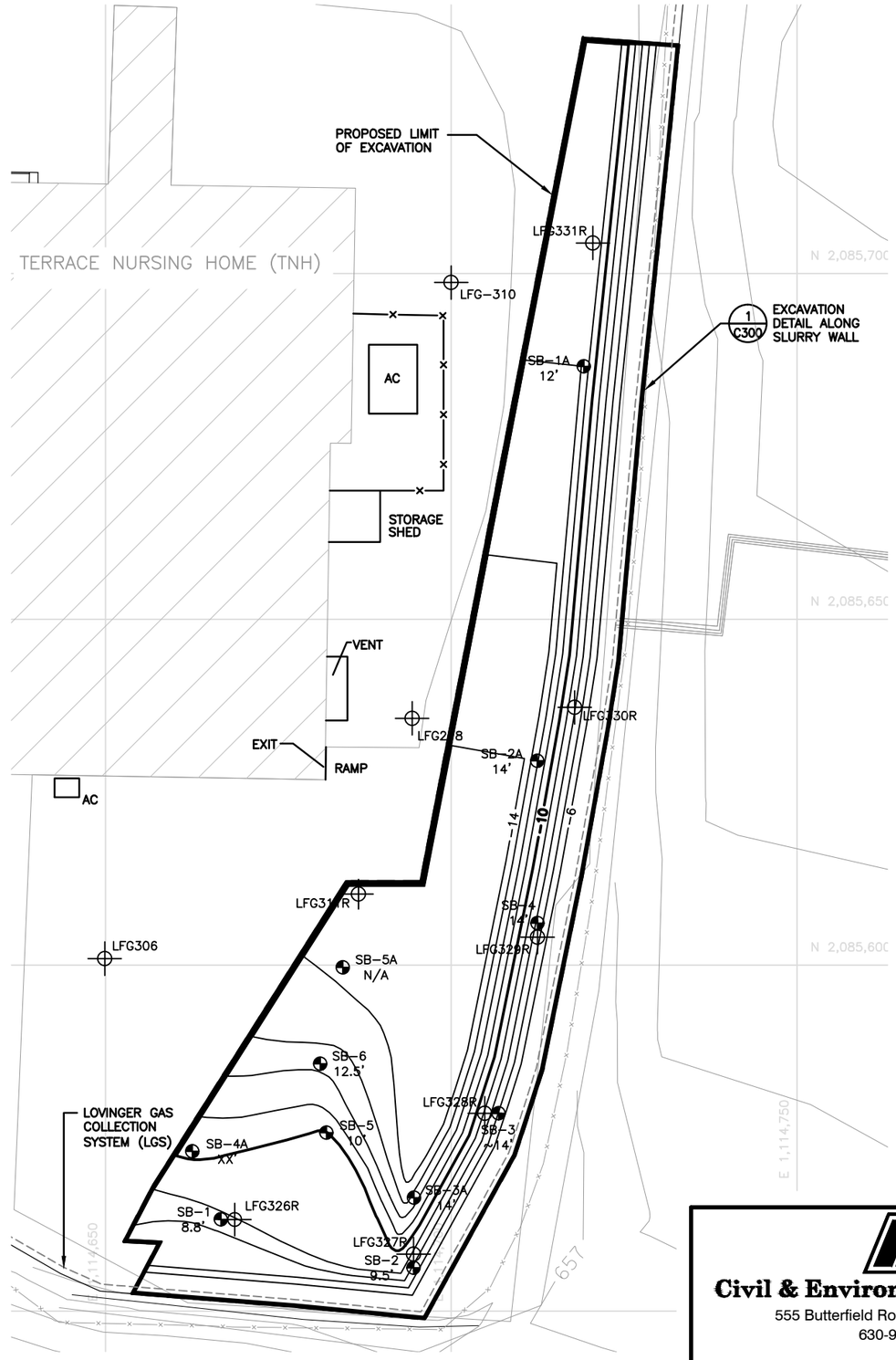

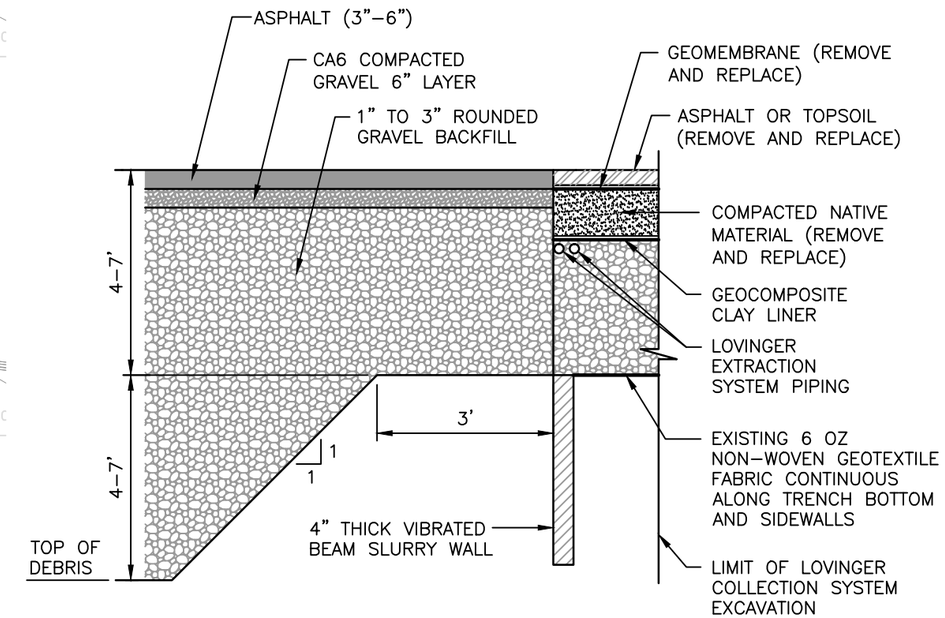

EXCAVATION DETAIL ALONG SLURRY WALL

1 / C300

NOT TO SCALE

NOTES:

1. CONTRACTOR SHALL VERIFY LOCATIONS OF ALL UNDER GROUND UTILITIES AND NOTIFY APPROPRIATE UTILITY PERSONNEL AT LEAST 72 HOURS PRIOR TO DRILLING OR EXCAVATION.
2. ALL EXCAVATED AREAS SHALL BE RESTORED TO THEIR ORIGINAL GRADE AND CONDITION.
3. EXCAVATION WILL BE TERMINATED AT THE TOP OF THE DEBRIS LAYER OR BOTTOM OF THE CLAY PLUG WHERE THE DEBRIS LAYER IS ABSENT.
4. EXCAVATION WILL BE BACKFILLED WITH 1"–3" GRAVEL OR SIMILAR MATERIAL IMMEDIATELY AFTER REACHING BOTTOM OF EXCAVATION GRADE.
5. EXCAVATION WALLS AWAY FROM SLURRY WALL WILL BE AS STEEP AS THE NATIVE SOILS ALLOW. NO SHORING OR SLOPE STABILITY ENHANCEMENT WILL BE UTILIZED.
6. LOVINGER EXTRACTION TRENCH MATERIALS (GCL, COMPACTED SOIL, ETC.) WILL BE SEGREGATED AND REUSED AFTER THE EXCAVATION IS BACKFILLED. ANY EXTRACTION TRENCH POROUS MEDIA WILL BE REUSED IN THE EXCAVATION.
7. ALL EXCAVATED SOIL WILL BE USED TO GRADE AREAS ON EAST YEOMAN CREEK LANDFILL.

REFERENCE

1. SOIL BORING LOCATION MAP DRAWING 174031–F1 PREPARED BY aetherdbs DATED: JUNE 10, 2011.
2. SOIL BORING AND GAS PROBE LOCATIONS MAP DRAWING "C100" "ADDITIONAL BACKYARD SUBSURFACE INVESTIGATION" BY CEC; SEPTEMBER 2015.

*HAND SIGNATURE ON FILE

SCALE IN FEET

0 20 40

CEC
Civil & Environmental Consultants, Inc.
555 Butterfield Road, Suite 300 - Lombard, IL 60148
630-963-6026 · 877-963-6026
www.cecinc.com

YEOMAN CREEK LANDFILL
PHASE 2
ADDITIONAL PROTECTIVE MEASURES
WAUKEGAN, ILLINOIS

PROPOSED PARKING LOT EXCAVATION PLAN

DRAWN BY:	MSK	CHECKED BY:	AMK	APPROVED BY:	BRH*	DRAWING NO.:	C300
DATE:	DECEMBER 2015	DWG SCALE:	1"= 20'	PROJECT NO:	121-067		

P:\2012\121-067\-CADD\Dwg\SW02-Phase II-Construction Set-11X17\121067-C300-Phase 2 Parking Lot Excavation Plan.dwg{C300} LS:(12/21/2015 - akrueger) - LP: 12/21/2015 2:54 PM

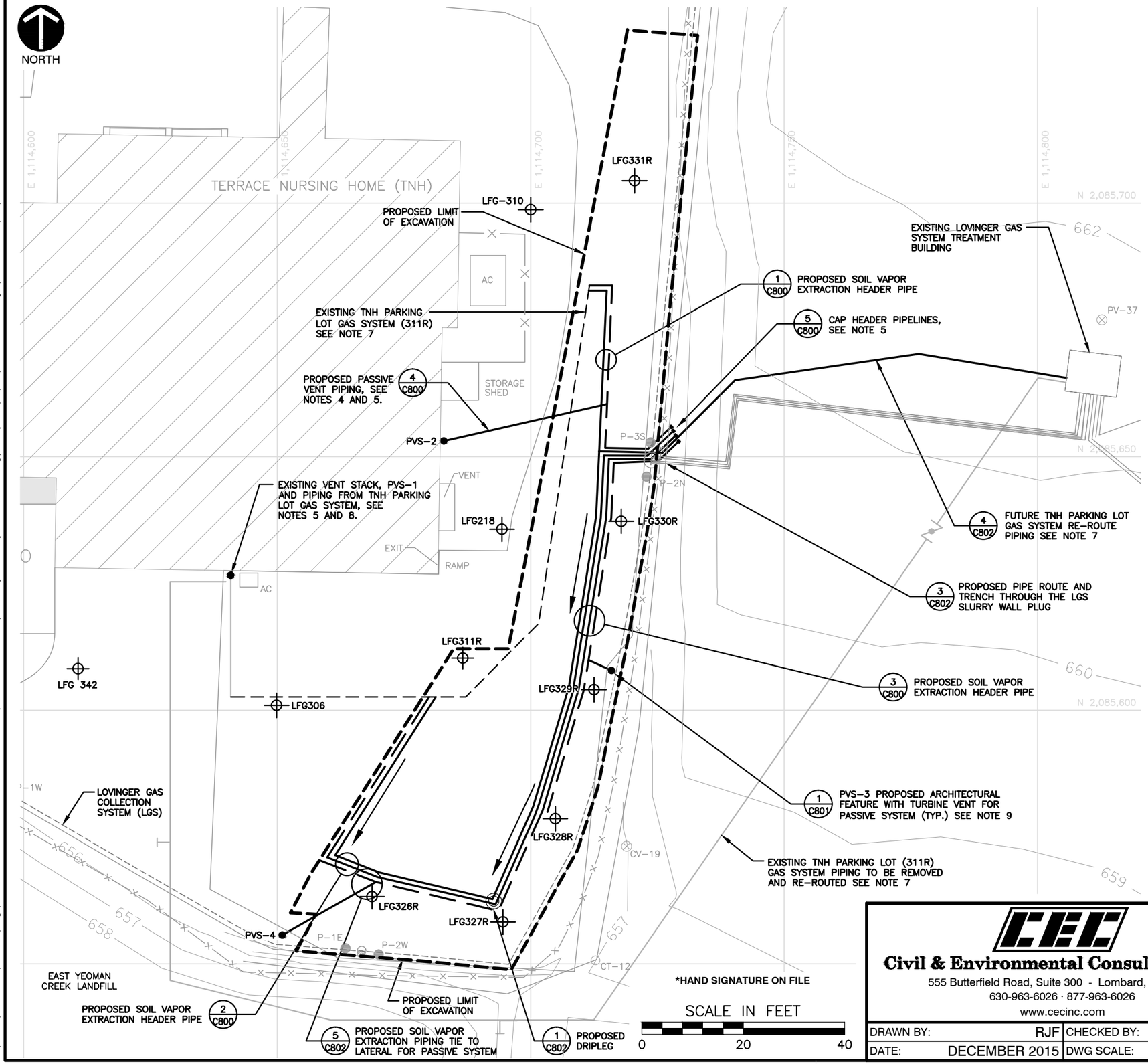

*HAND SIGNATURE ON FILE

SCALE IN FEET

0 20 40

LEGEND:

- PROPOSED HDPE VACUUM AND SLOPE DIRECTION
- PROPOSED SOIL VAPOR PIPING
- PVS-1 ● PROPOSED VENT STACK
- PROPOSED DRIPLEG
- EXISTING GAS SYSTEM PIPELINE
- EXISTING GAS SYSTEM TRENCH (311R)
- EXISTING LOVINGER GAS COLLECTION SYSTEM
- EXISTING PAVED AREA
- EXISTING FENCE
- CT-12 EXISTING CONDENSATE TRAP
- P-1W EXISTING LGS PIEZOMETER
- CV-19 EXISTING CONTROL VALVE
- LFG306 EXISTING GAS PROBE
- EXISTING BUTTERFLY CONTROL VALVE
- EXISTING BLIND FLANGE

NOTES:

1. CONTRACTOR SHALL VERIFY LOCATIONS OF ALL UNDER GROUND UTILITIES AND NOTIFY APPROPRIATE UTILITY PERSONNEL AT LEAST 72 HOURS PRIOR TO DRILLING OR EXCAVATION.
2. MAGNETIC TRACER TAPE SHALL BE INSTALLED 6-INCHES ABOVE ALL PIPING.
3. ALL EXCAVATED AREAS SHALL BE RESTORED TO THEIR ORIGINAL GRADE AND CONDITION.
4. VENT STACK AND PIPING (PVS-2) WILL BE VENTED TO THE ROOF WITH A TURBINE, 6-FEET ABOVE THE ROOF LINE.
5. VACUUM HEADER PIPES WILL BE STUBBED AND CAPPED. ALL PIPING WILL BE BURIED UNDERGROUND FOR THE POTENTIAL ACTIVE SYSTEM, WITH A POST FOR LOCATION.
6. PASSIVE VENTS STACKS (PVS-1, PVS-2) IN PARKING LOT AREA THAT RUN ALONG THE ROOF WILL HAVE A BLIND FLANGE CONNECTION AT THE BASE, IF IN THE FUTURE THIS SYSTEM IS CONVERTED TO ACTIVE, A PLATE WILL BE INSTALLED IN THE BLIND FLANGE.
7. TNH PARKING LOT GAS SYSTEM (311R) TO REMAIN ONLINE WHILE PHASE 2 SYSTEM IS IN PASSIVE MODE. THE EXISTING PIPING WILL BE REPLACED IF AFFECTED BY EXCAVATION.
8. PASSIVE VENT STACK (PVS-1) CONNECTED TO EXISTING TNH PARKING LOT SYSTEM TO REMAIN CLOSED (NON-PASSIVE) DURING ACTIVE OPERATION OF THE TNH PHASE 2 GAS SYSTEM PASSIVE PHASE.
9. PROPOSED ARCHITECTURAL FEATURE WITH TURBINE VENT (PVS-3, PVS-4) IN PARKING WILL BE USED PASSIVELY AND IF POTENTIAL ACTIVE SYSTEM IS NEEDED, A MANUAL VALVE IN THE BASE OF THE FEATURE WILL BE SHUT.
10. EXISTING GAS PROBES IN EXCAVATION AREA WILL BE REPLACED AS SHOWN IN DETAIL 2/C801.

REFERENCE

1. SOIL BORING LOCATION MAP DRAWING 174031-F1 PREPARED BY aetherdbs DATED: JUNE 10, 2011.
2. SOIL BORING AND GAS PROBE LOCATIONS MAP DRAWING "C100" "ADDITIONAL BACKYARD SUBSURFACE INVESTIGATION" BY CEC; SEPTEMBER 2015.

CEC
Civil & Environmental Consultants, Inc.
555 Butterfield Road, Suite 300 - Lombard, IL 60148
630-963-6026 · 877-963-6026
www.cecinc.com

YEOMAN CREEK LANDFILL
PHASE 2
ADDITIONAL PROTECTIVE MEASURES
WAUKEGAN, ILLINOIS

PROPOSED PHASE 2 SYSTEM LAYOUT (PASSIVE)

DRAWN BY:	RJF	CHECKED BY:	AMK	APPROVED BY:	BRH*	DRAWING NO.:	C301
DATE:	DECEMBER 2015	DWG SCALE:	1"= 20'	PROJECT NO:	121-067		

P:\2012\121-067\-CADD\Dwg\SW02-Phase II-Construction Set-11X17\121067-C301-Proposed System Layout-Passive.dwg{C301} LS:(12/21/2015 - akrueger) - LP: 12/21/2015 2:58 PM

NORTH

LEGEND:

- ACTIVE HDPE VACUUM AND SLOPE DIRECTION
- ACTIVE SOIL VAPOR TRENCH
- PVS-2 PASSIVE VENT STACK
- EXISTING DRIPLEG
- EXISTING GAS SYSTEM PIPELINE
- EXISTING GAS SYSTEM TRENCH (311R)
- EXISTING LOVINGER GAS COLLECTION SYSTEM
- EXISTING FENCE
- EXISTING PAVED AREA
- CT-12 EXISTING CONDENSATE TRAP
- P-1W EXISTING LGS PIEZOMETER
- CV-19 EXISTING CONTROL VALVE
- LFG306 EXISTING GAS PROBE

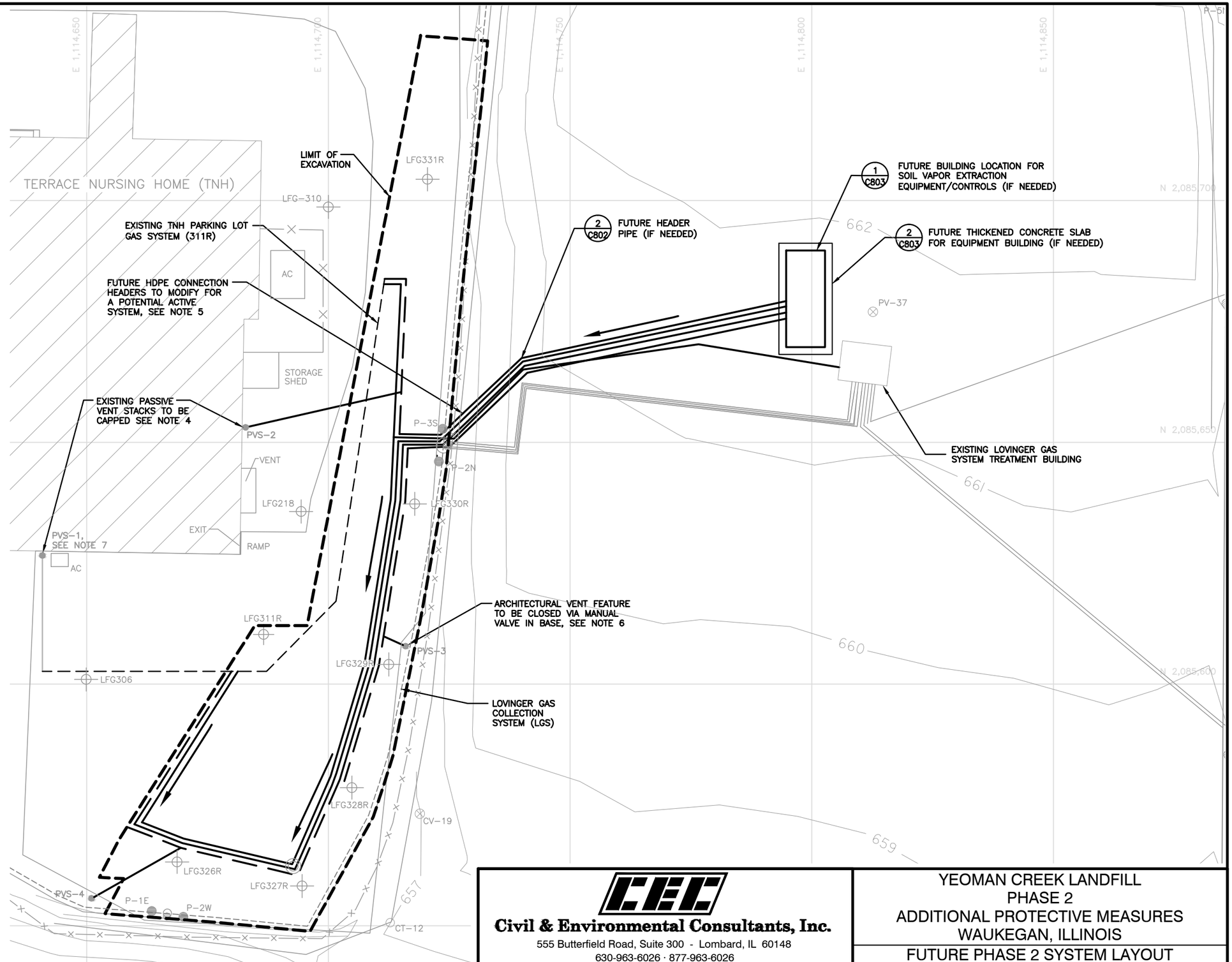

NOTES:

1. CONTRACTOR SHALL VERIFY LOCATIONS OF ALL UNDER GROUND UTILITIES AND NOTIFY APPROPRIATE UTILITY PERSONNEL AT LEAST 72 HOURS PRIOR TO DRILLING OR EXCAVATION.
2. MAGNETIC TRACER TAPE SHALL BE INSTALLED 6-INCHES ABOVE ALL PIPING.
3. ALL EXCAVATED AREAS SHALL BE RESTORED TO THEIR ORIGINAL GRADE AND CONDITION.
4. VENT STACKS (PVS-1, PVS-2) INSTALLED FOR THE PASSIVE SYSTEM WILL HAVE VERTICAL PVC PIPING THAT IS FLANGED AND OPEN FOR PASSIVE, IF THE SYSTEM IS POTENTIALLY CONVERTED TO ACTIVE, A PLATE WILL BE INSTALLED IN THE BLIND FLANGE TO STOP PASSIVE GAS TO THE ATMOSPHERE AND CLOSE OUT THE VACUUM LOOP.
5. VACUUM HEADER PIPES WHICH WILL BE STUBBED AND CAPPED FOR POTENTIAL ACTIVE SYSTEM INSTALLATION. PIPING LINES SHOWN FOR CLARITY, SEE DETAILS ON SHEET C802.
6. ARCHITECTURAL VENT FEATURE (PVS-3, PVS-4) IN PARKING LOT TO BE CLOSED VIA MANUAL VALVE IN BASE OF STACK FOR POTENTIAL ACTIVE SYSTEM.
7. PASSIVE VENT STACK (PVS-1) CONNECTED TO EXISTING TNH PARKING LOT (311R) SYSTEM TO REMAIN CLOSED (NON-PASSIVE) DURING ACTIVE OPERATION OF THAT SYSTEM.

REFERENCE

1. SOIL BORING LOCATION MAP DRAWING 174031-F1 PREPARED BY aetherdbs DATED: JUNE 10, 2011.
2. SOIL BORING AND GAS PROBE LOCATIONS MAP DRAWING "C100" "ADDITIONAL BACKYARD SUBSURFACE INVESTIGATION" BY CEC; SEPTEMBER 2015.

*HAND SIGNATURE ON FILE

SCALE IN FEET
0 20 40

CEC
Civil & Environmental Consultants, Inc.
555 Butterfield Road, Suite 300 - Lombard, IL 60148
630-963-6026 · 877-963-6026
www.cecinc.com

YEOMAN CREEK LANDFILL
PHASE 2
ADDITIONAL PROTECTIVE MEASURES
WAUKEGAN, ILLINOIS

FUTURE PHASE 2 SYSTEM LAYOUT (ACTIVE)

DRAWN BY:	RJF	CHECKED BY:	AMK	APPROVED BY:	BRH*	DRAWING NO.:
DATE:	DECEMBER 2015	DWG SCALE:	1"= 20'	PROJECT NO:	121-067	C302

P:\2012\121-067\-CADD\Dwg\SW02-Phase II-Construction Set-11X17\121067-C302-Proposed System Layout-Active_7-25-14.DWG{C302} LS:(12/21/2015 - aknueger) - LP: 12/21/2015 3:02 PM

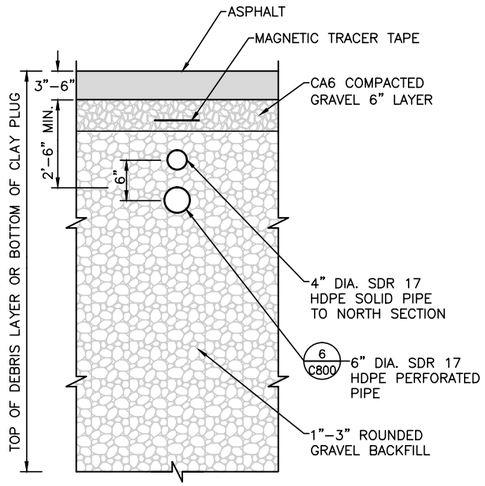

NOTES:

1. ASPHALT SHALL BE GRADE CRS–2 OR CRS–2P OR APPROVED EQUAL.

1 C800 SOIL VAPOR EXTRACTION PIPING BELOW ASPHALT PARKING LOT DETAIL

NOT TO SCALE

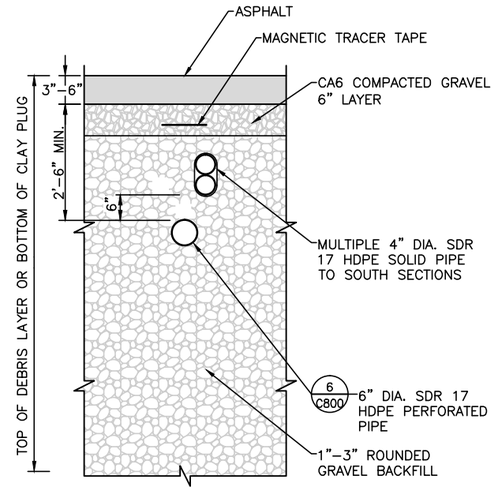

NOTES:

1. ASPHALT SHALL BE GRADE CRS–2 OR CRS–2P OR APPROVED EQUAL.

2 C800 SOIL VAPOR EXTRACTION PIPING BELOW ASPHALT PARKING LOT DETAIL

NOT TO SCALE

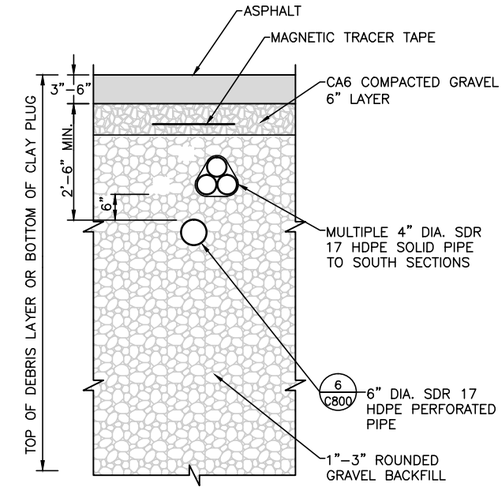

NOTES:

1. ASPHALT SHALL BE GRADE CRS–2 OR CRS–2P OR APPROVED EQUAL.

3 C800 SOIL VAPOR EXTRACTION PIPING BELOW ASPHALT PARKING LOT DETAIL

NOT TO SCALE

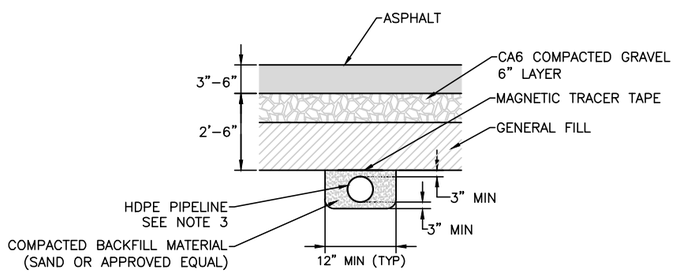

NOTES:

1. ASPHALT SHALL BE GRADE CRS–2 OR CRS–2P OR APPROVED EQUAL.
2. COMPACT SAND BEDDING AND BACKFILL WITH VIBRATORY PLATE OR EQUAL.
3. PIPE WILL BE 4" DIA. SDR 17 HDPE FOR GAS PIPELINES.

4 C800 PASSIVE VENT PIPING BELOW ASPHALT PARKING LOT DETAIL

NOT TO SCALE

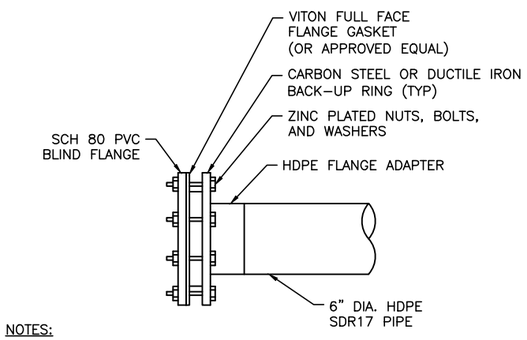

NOTES:

1. WRAP FLANGE CONNECTION WITH PLASTIC WRAP AND TAPE FOR FUTURE CONNECTION.
2. INSTALL TREATED LUMBER POST WITH SIGN NEAR BLIND FLANGE.

5 C800 BLIND FLANGE

NOT TO SCALE

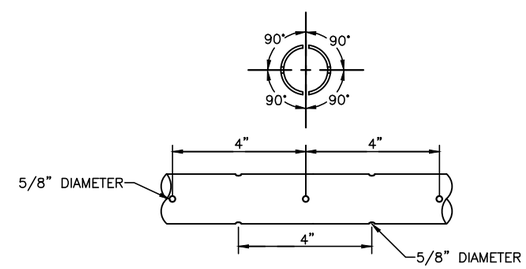

NOTE:

PIPE SHALL BE PERFORATED EVERY 4" ON 180° TURNS THEN ROTATE 90° WITH THE SAME PATTERN AND STAGGERED.

6 C800 PERFORATED PIPE DETAIL

NOT TO SCALE

*HAND SIGNATURE ON FILE

Civil & Environmental Consultants, Inc.
555 Butterfield Road, Suite 300 - Lombard, IL 60148
630-963-6026 · 877-963-6026
www.cecinc.com

YEOMAN CREEK LANDFILL
PHASE 2
ADDITIONAL PROTECTIVE MEASURES
WAUKEGAN, ILLINOIS

DETAIL SHEET I

DRAWN BY:	RJF	CHECKED BY:	AMK	APPROVED BY:	BRH*	DRAWING NO.:	C800
DATE:	DECEMBER 2015	DWG SCALE:	NOT TO SCALE	PROJECT NO:	121-067		

P:\2012\121-067\-CADD\Dwg\SW02-Phase II-Construction Set-11X17\121067-C800-803-Detail Sheets.dwg{C800} LS:(12/3/2015 - akrueger) - LP: 12/21/2015 3:25 PM

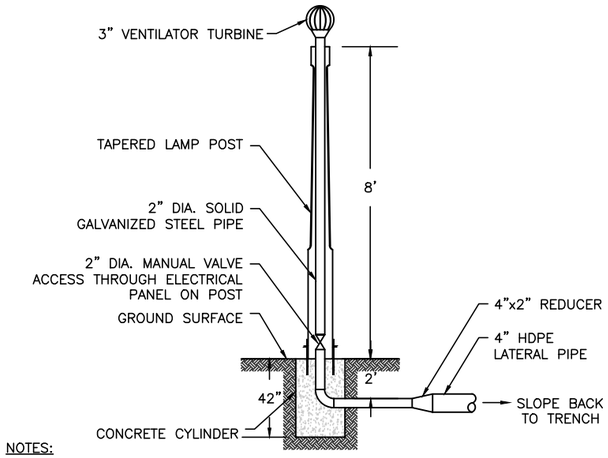

NOTES:

1. INSTALL 2" DIA. SOLID PIPE IN 42" CYLINDER CONCRETE BASE, WHICH WILL CONNECT TO 2" DIA. INTERIOR GALVANIZED STEEL PIPE.
2. BOLT TAPERED LAMP POST TO CYLINDER CONCRETE BASE AND CONNECT 3" VENTILATOR TURBINE TO TOP OF LAMP POST AND STEEL PIPE WITH REDUCER.

1 / C801 **ARCHITECTURAL FEATURE WITH TURBINE DETAIL**
NOT TO SCALE

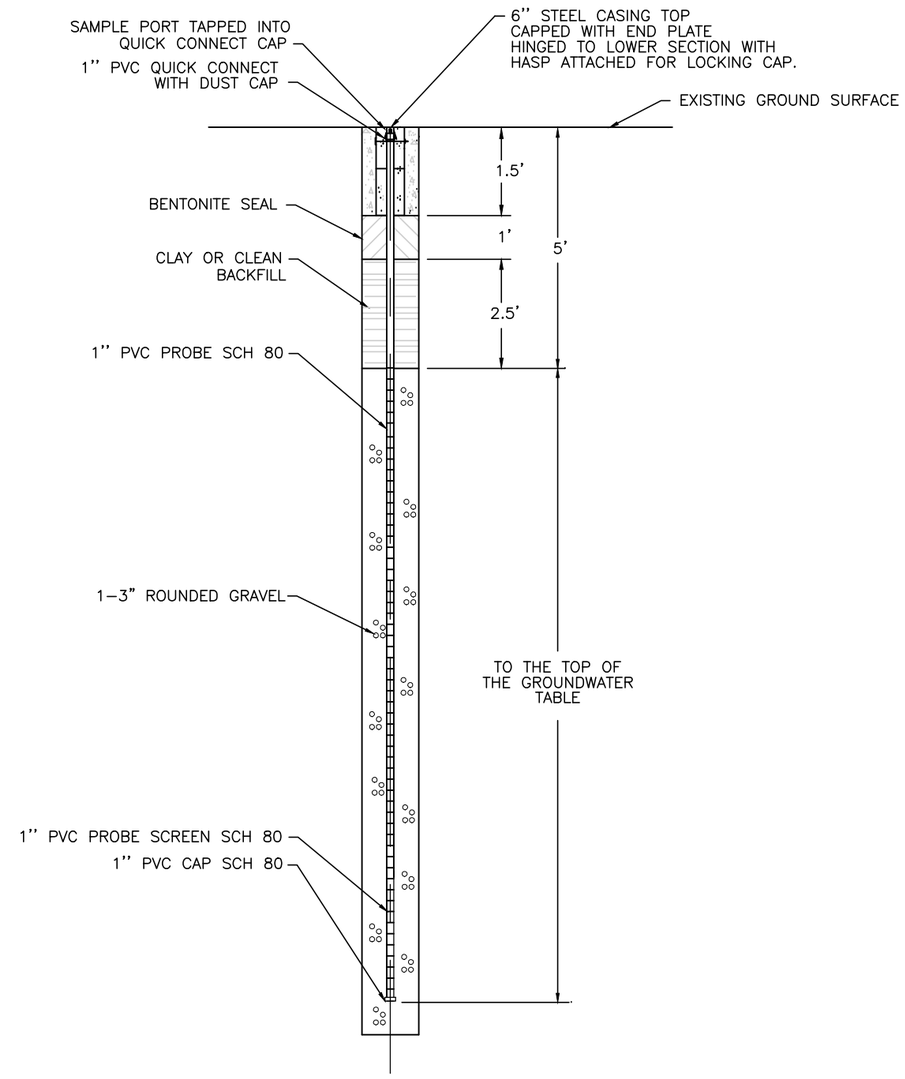

2 / C801 **REPLACMENT GAS PROBE IN PARKING LOT**
NOT TO SCALE

*HAND SIGNATURE ON FILE

Civil & Environmental Consultants, Inc.
555 Butterfield Road, Suite 300 - Lombard, IL 60148
630-963-6026 · 877-963-6026
www.cecinc.com

YEOMAN CREEK LANDFILL
PHASE 2
ADDITIONAL PROTECTIVE MEASURES
WAUKEGAN, ILLINOIS

DETAIL SHEET II

DRAWN BY:	RJF	CHECKED BY:	AMK	APPROVED BY:	BRH*	DRAWING NO.:	C801
DATE:	DECEMBER 2015	DWG SCALE:	NOT TO SCALE	PROJECT NO:	121-067		

P:\2012\121-067\-CADD\Dwg\SW02-Phase II-Construction Set-11X17\121067-C800-803-Detail Sheets.dwg(C801) LS:(12/3/2015 - akrueger) - LP: 12/21/2015 3:27 PM

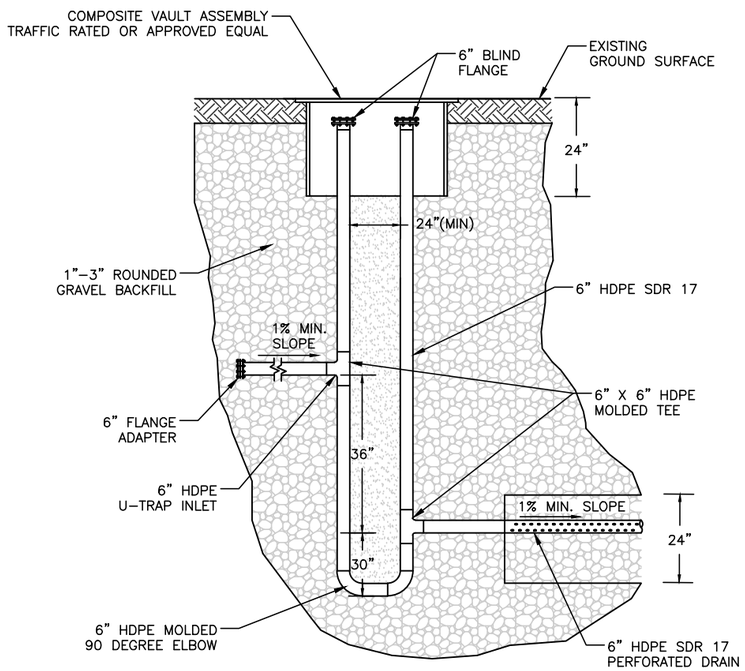

NOTE:

1. COMPLETELY FILL U–TRAP WITH WATER TO ELEVATION OF 6" PIPE OUTLET.
2. DRIP LEG DESIGNED FOR A MAXIMUM VACUUM OF 36" W.C.
3. DRIP LEG WILL BE INSTALLED IN BACKFILL MATERIAL FOR PARKING LOT.

1 C802 **DRIP LEG AND GRAVITY DRAIN DETAIL**
NOT TO SCALE

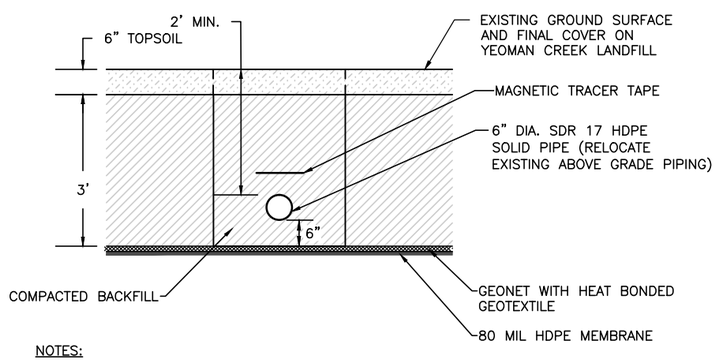

NOTES:

1. TRENCH TO TOP OF GEONET/GEOMEMBRANE LAYER, APPROXIMATELY 2–3 FEET BELOW GRADE.
2. BACKFILL SHALL BE MATERIAL EXCAVATED AND RETURNED TO THE TRENCH ABOVE THE LANDFILL.

4 C802 **PROPOSED TNH PARKING LOT (311R) GAS SYSTEM PIPING DETAIL**
NOT TO SCALE

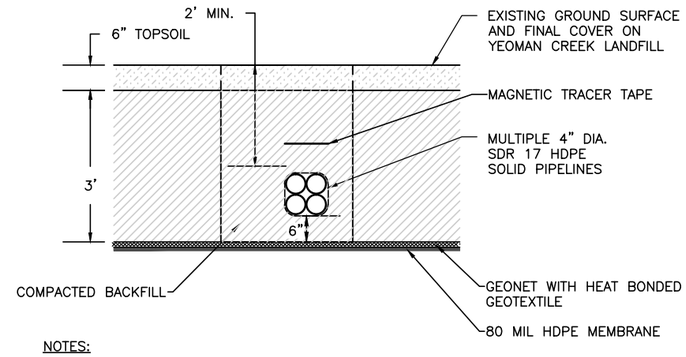

NOTES:

1. TRENCH TO TOP OF GEONET/GEOMEMBRANE LAYER, APPROXIMATELY 2–3 FEET BELOW GRADE.
2. BACKFILL SHALL BE MATERIAL EXCAVATED AND RETURNED TO TRENCH.

2 C802 **FUTURE HEADER PIPE TRENCH ABOVE EXISTING LANDFILL COVER DETAIL**
NOT TO SCALE

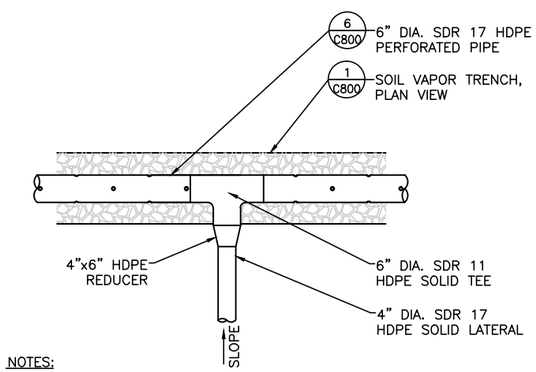

NOTES:

1. PLAN VIEW SHOWN WITHOUT ADDITIONAL PIPE, MAGNETIC TRACER, AND ASPHALT FOR CLARITY.
2. HDPE 6" TEE SHOWN WILL CONNECT LATERALLY VIA FUSION TO LATERAL PIPE FOR PASSIVE SYSTEM, SLOPE LATERAL BACK TO 6" PERFORATED PIPE AND TRENCH FOR DRAINAGE, REDUCE TO 4" HDPE FOR LATERAL PIPING.

5 C802 **LATERAL TIE TO PIPING DETAIL**
NOT TO SCALE

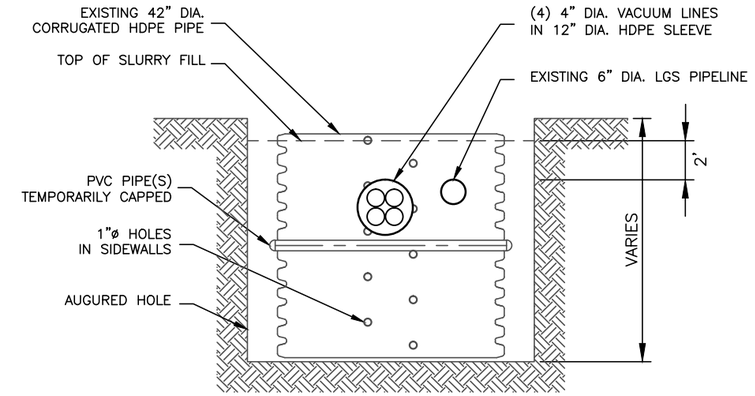

SECTION

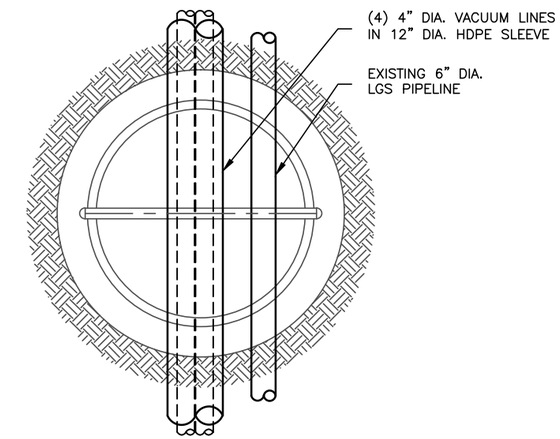

PLAN

NOTES:

1. EXCAVATE 3–FEET BELOW GRADE AROUND AUGURED HOLE/42" DIA. CORRUGATED HDPE PIPE, DRILL HOLES FOR PVC SLEEVES AS SHOWN ON DRAWING.
2. HDPE SLEEVES WILL BE USED TO ROUTE EXISTING LGS PIPE, AND VACUUM PIPES FOR SOIL VAPOR EXTRACTION.
3. USE ORIGINAL EXCAVATION MATERIAL AS PLUG BACKFILL, AND RE–GRADE TO ASSURE THAT THE EXCAVATED AREA DOES NOT SETTLE BELOW ORIGINAL GRADE, SLOPE AWAY FROM PLUG.
4. ALL EXCAVATED AREAS SHALL BE RESTORED TO THEIR ORIGINAL GRADE AND CONDITION.

3 C802 **PROPOSED PIPE ROUTE AND TRENCH THROUGH THE LGS DETAIL**
NOT TO SCALE

*HAND SIGNATURE ON FILE

CEC
Civil & Environmental Consultants, Inc.
555 Butterfield Road, Suite 300 - Lombard, IL 60148
630-963-6026 · 877-963-6026
www.cecinc.com

YEOMAN CREEK LANDFILL
PHASE 2
ADDITIONAL PROTECTIVE MEASURES
WAUKEGAN, ILLINOIS

DETAIL SHEET III

DRAWN BY:	RJF	CHECKED BY:	AMK	APPROVED BY:	BRH*	DRAWING NO.:	C802
DATE:	DECEMBER 2015	DWG SCALE:	NOT TO SCALE	PROJECT NO:	121-067		

P:\2012\121-067\-CADD\Dwg\SW02-Phase II-Construction Set-11X17\121067-C800-803-Detail Sheets.dwg{C802} LS:(12/21/2015 - akrueger) - LP: 12/21/2015 3:34 PM

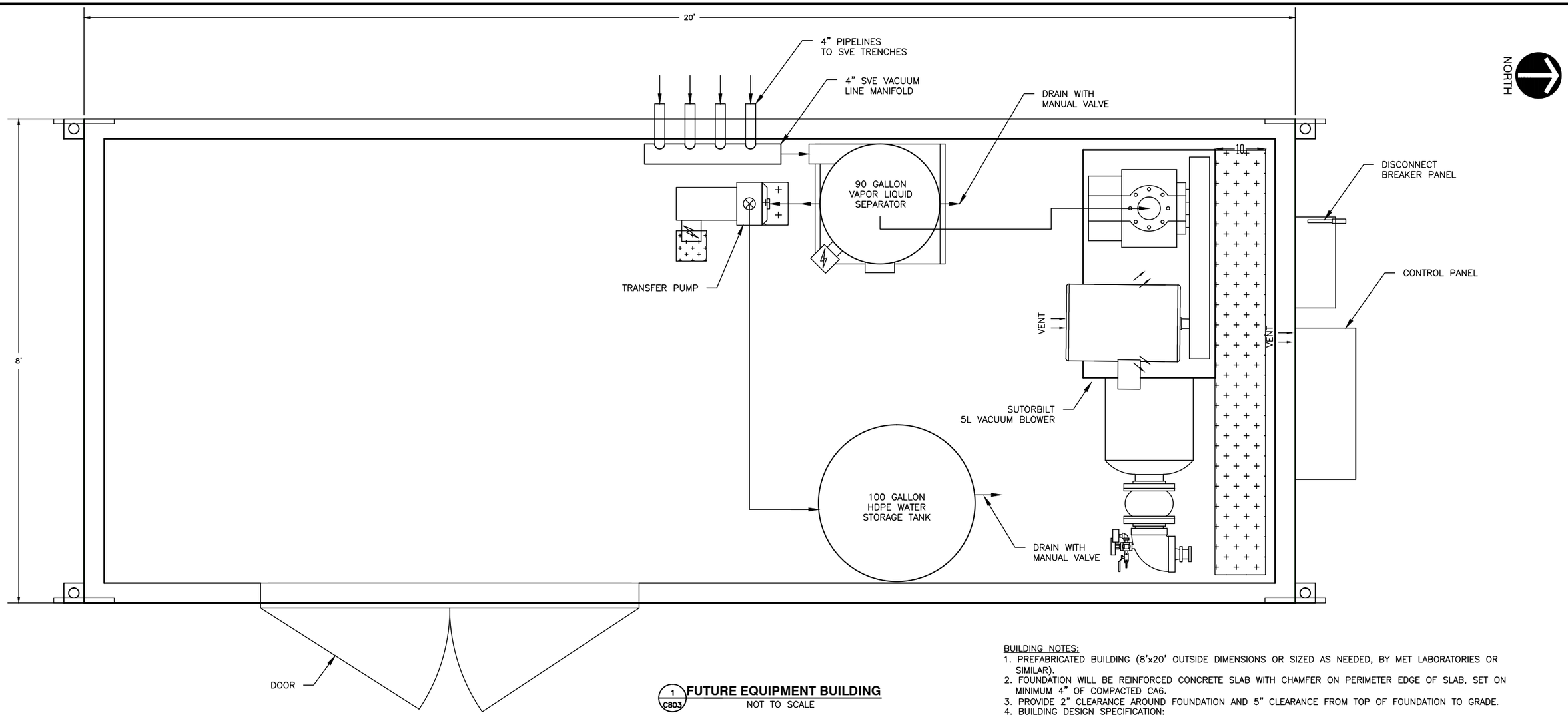

1 C803 **FUTURE EQUIPMENT BUILDING**
NOT TO SCALE

BUILDING NOTES:
1. PREFABRICATED BUILDING (8'x20' OUTSIDE DIMENSIONS OR SIZED AS NEEDED, BY MET LABORATORIES OR SIMILAR).
2. FOUNDATION WILL BE REINFORCED CONCRETE SLAB WITH CHAMFER ON PERIMETER EDGE OF SLAB, SET ON MINIMUM 4" OF COMPACTED CA6.
3. PROVIDE 2" CLEARANCE AROUND FOUNDATION AND 5" CLEARANCE FROM TOP OF FOUNDATION TO GRADE.
4. BUILDING DESIGN SPECIFICATION:
   A) ROOF TOTAL LOAD= 45 PSF
      ROOF LIVE LOAD= 40 PSF
      ROOF DEAD LOAD= 5 PSF
      GROUND SNOW LOAD= NA
   B) WIND LOAD= 110 MPH
   C) SEISMIC ZONE= 0
5. THE BUILDING TO CONFORM TO THE FOLLOWING CODES:
   2003 INTERNATIONAL BUILDING CODE
   2003 INTERNATIONAL MECHANICAL CODE
   2002 NATIONAL ELECTRICAL CODE

GENERAL NOTES:
1. EQUIPMENT FOUNDATION, BUILDING, CONTROLS, POWER DROP, & CONTENTS WILL ONLY BE INSTALLED AFTER ACTIVE OPERATION IS DEEMED NECESSARY.
2. EQUIPMENT LAYOUT IS GENERAL MAY VARY AT TIME OF INSTALLATION.
3. ELECTRICAL POWER DROP, DISTRIBUTION DETAILS, SINGLE LINE DIAGRAM, AND GROUNDING PLAN TO BE PREPARED FOR USE BY CONSTRUCTION CONTRACTOR.

SOIL VAPOR EXTRACTION (SVE) EQUIPMENT NOTES:
1. THIS CONFIGURATION IS FOR A SVE SYSTEM THAT IS CAPABLE OF 500 STANDARD CUBIC FEET PER MINUTE (SCFM) FLOW AT 25 INCHES OF WATER COLUMN ("W.C.).
2. THE MANIFOLD WILL BE 4-INCH DIAMETER WITH FOUR (4) 2-INCH LEGS, EACH LEG WILL CONTAIN A VACUUM GAUGE, SAMPLE PORT AND FLOW CONTROL VALVE THAT WILL TRANSITION TO 4" HDPE IN THE FIELD.
3. THE VAPOR LIQUID SEPARATOR, NEWTERRA MODEL VLW-90, WILL INCLUDE A GOULDS CENTRIFUGAL TRANSFER PUMP CAPABLE OF 5 GALLONS PER MINUTE (GPM) AT 50-FEET TOTAL DYNAMIC HEAD (TDH) OR EQUAL.
4. THE VACUUM BLOWER, MODEL SUTORBILT 5L, IS A 10 HORSE POWER (HP), 208-230/460V TEFC CLASS S1 DIVISION 2 MOTOR.

ELECTRICAL NOTES:
1. ELECTRICAL EQUIPMENT AND CONDUIT INSTALLATION WILL BE CLASS I DIVISION 2 LOCATION FOR THE EQUIPMENT.
2. POWER AT SITE IS 240 VOLT THREE-PHASE POWER.
3. THE CONTROL PANEL AND BREAKER WILL BE LOCATED IN A NON HAZARDOUS LOCATION AND DESIGNED FOR OUTSIDE USE ONLY.
4. AMBIENT TEMPERATURE UP TO 100 DEGREES F.
5. MET LABORATORIES CERTIFIED RELAY BASED CONTROL SYSTEM WITH AUTODIALER.

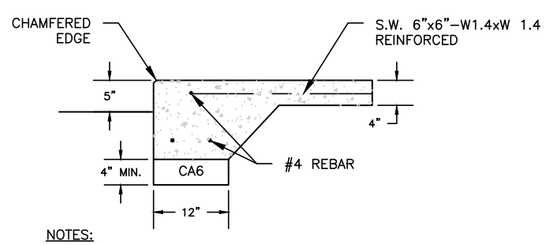

NOTES:
1. REBAR TO HAVE MINIMUM 2" EMBEDMENT.
2. CONCRETE TO BE 4,000 PSI @ 28 DAYS.

2 C803 **THICKENED SLAB**
NOT TO SCALE

***HAND SIGNATURE ON FILE**

Civil & Environmental Consultants, Inc.
555 Butterfield Road, Suite 300 - Lombard, IL 60148
630-963-6026 · 877-963-6026
www.cecinc.com

YEOMAN CREEK LANDFILL
PHASE 2
ADDITIONAL PROTECTIVE MEASURES
WAUKEGAN, ILLINOIS

FUTURE EQUIPMENT BUILDING LAYOUT AND SPECIFICATIONS

DRAWN BY:	RJF	CHECKED BY:	AMK	APPROVED BY:	BRH*	DRAWING NO.:	C803
DATE:	DECEMBER 2015	DWG SCALE:	NOT TO SCALE	PROJECT NO:	121-067		

P:\2012\121-067\-CADD\Dwg\SW02-Phase II-Construction Set-11X17\121067-C800-803-Detail Sheets.dwg{C803} LS:(12/21/2015 - akrueger) - LP: 12/21/2015 3:35 PM

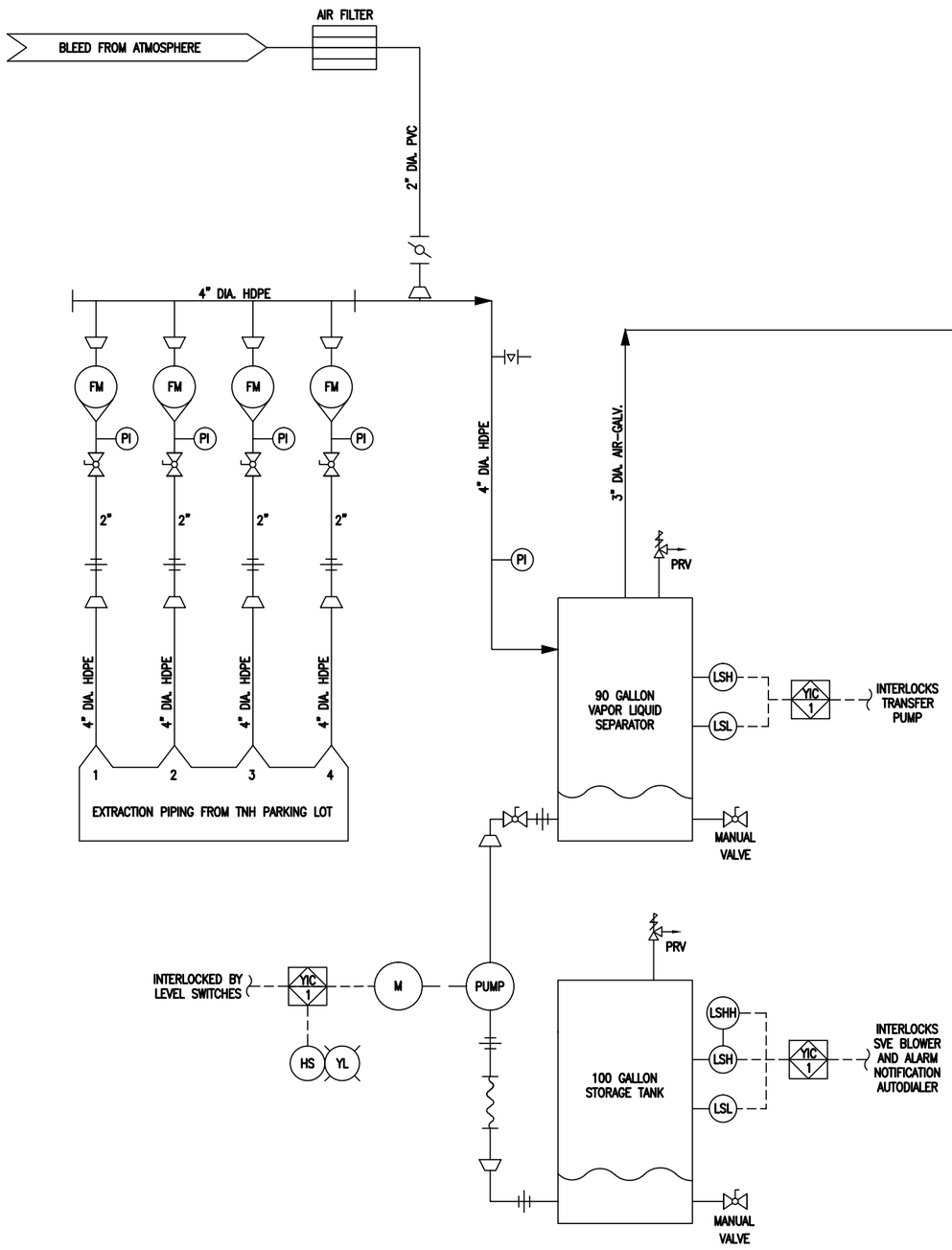

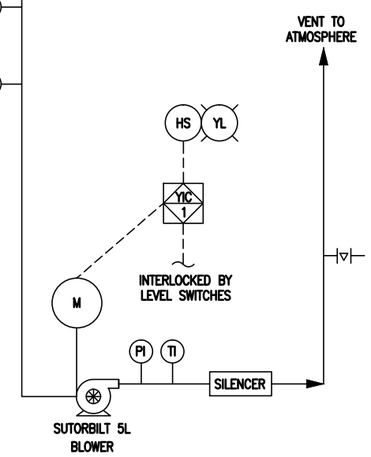

P&ID SYMBOL LEGEND

CA – COMPRESSED AIR FITTING
FM – FLOW METER
HS – HAND SWITCH
LSL – LEVEL SWITCH LOW
LSH – LEVEL SWITCH HIGH
LSHH – LEVEL SWITCH HIGH HIGH
PI – PRESSURE INDICATOR
PRV – PRESSURE RELIEF VALVE
TI – TEMPERATURE INDICATOR
TS – TEMPERATURE SWITCH
YL – RUN LIGHT

FM AS5 — VARIABLE AREA FLOW METER
M — ELECTRIC MOTOR
YIC 1 — INTERLOCK TO CONTROL PANEL
BALL VALVE
NEEDLE VALVE
CHECK VALVE
BUTTERFLY VALVE
PRESSURE SAFETY RELIEF VALVE
PETCOCK
BLOWER
UNION CONNECTION
CAM–LOCK CONNECTION
SS FLEXIBLE CONNECTION
PIPE TRANSITION
PIPE
INTERLOCK/CONTROL
PIPE CAP
LINE SIZE REDUCTION

*HAND SIGNATURE ON FILE

Civil & Environmental Consultants, Inc.
555 Butterfield Road, Suite 300 - Lombard, IL 60148
630-963-6026 · 877-963-6026
www.cecinc.com

YEOMAN CREEK LANDFILL
PHASE 2
ADDITIONAL PROTECTIVE MEASURES
WAUKEGAN, ILLINOIS

FUTURE P&ID SOIL VAPOR EXTRACTION

DRAWN BY:	RJF	CHECKED BY:	AMK	APPROVED BY:	BRH*	DRAWING NO.:
DATE:	DECEMBER 2015	DWG SCALE:	NOT TO SCALE	PROJECT NO:	121-067	C804

P:\2012\121-067\-CADD\Dwg\SW02-Phase II-Construction Set-11X17\121067-C804-P&ID Sheets.dwg{C804} LS:(12/21/2015 - akrueger) - LP: 12/21/2015 3:37 PM

TECHNICAL SPECIFICATIONS

I. GENERAL PROJECT LAYOUT AND CONSTRUCTION

1. CONTRACTOR SHALL BE AWARE OF THE PRESENT TOPOGRAPHIC CONDITIONS OF THE PROJECT SITE AND OF ALL INSTALLATION REQUIREMENTS FOR THE PROPOSED PHASE 2 SYSTEM PRESENTED AND SPECIFIED IN THE DESIGN PLANS, PRIOR TO PERFORMING ANY WORK.

2. PASSIVE SYSTEM FOR PHASE 2 SHALL BE ORIGINALLY INSTALLED AT THE TIME OF THIS CONSTRUCTION, IF DEEMED NECESSARY THE ACTIVE SYSTEM FOR PHASE 2 SHALL BE INSTALLED AT A LATER DATE, THAT INCLUDES ALL MATERIALS ON SHEET C302 AND ASSOCIATED DETAILS.

3. CONTRACTOR SHALL BE AWARE OF THE DANGERS INVOLVED WITH WORKING IN THE CONFINED SPACE OF THE EXCAVATION AND/OR EXCAVATED HEADER AND LATERAL PIPELINE TRENCH AND MUST TAKE APPROPRIATE SAFETY MEASURES AND ADHERE TO ALL SAFETY REQUIREMENTS. ALL WORK SHALL BE PERFORMED IN ACCORDANCE WITH THE SAFETY TASK FORCE, "A COMPILATION OF FIELD PRACTICES AND PROCEDURES, HEALTH AND SAFETY" DATED AUGUST 1991, AND ANY APPLICABLE FEDERAL AND STATE REGULATIONS. THE CONTRACTOR WILL PROVIDE A SITE SPECIFIC HEALTH AND SAFETY PLAN FOR REVIEW AND APPROVAL BY THE PROJECT COORDINATOR.

4. THE CONTRACTOR SHALL BE RESPONSIBLE FOR LOCATING ALL UTILITIES WITHIN THE CONSTRUCTION AREA. THE CONTRACTOR SHALL NOTIFY THE DIGGER'S HOTLINE OF ILLINOIS (HOTLINE), JULIE @ PHONE NO. 1–800–892–0123, AT LEAST 72–HOURS IN ADVANCE OF THE COMMENCEMENT OF WORK AT ANY SITE TO ALLOW THE MEMBER UTILITIES TO EXAMINE THE CONSTRUCTION SITE AND MARK THE LOCATION OF THE UTILITIES' RESPECTIVE FACILITIES. CONTRACTOR SHALL BE RESPONSIBLE FOR REPAIRING ANY DAMAGE TO LOCATED EXISTING FACILITIES DUE TO CONTRACTORS' CONSTRUCTION, AT NO ADDITIONAL COST TO CLIENT. REPAIR OF ANY DAMAGE TO UN–LOCATED UTILITIES DUE TO CONTRACTOR'S CONSTRUCTION, SHALL BE AT ADDITIONAL COST TO THE CLIENT.

5. CONTRACTORS CONSTRUCTION SEQUENCE SHALL BE SUBJECT TO PROJECT COORDINATOR APPROVAL ESPECIALLY FOR THE INSTALLATION OF HEADER PIPELINES NEAR AND ACROSS ACCESS ROADS, PARKING LOTS, HUMAN TRAFFIC AREAS TO LIMIT IMPEDIMENT OF NORMAL OPERATIONS.

6. ALL HEADER PIPELINES SHALL BE INSTALLED AT A MINIMUM 0.5–PERCENT SLOPE FOR PROPER GRAVITY DRAINAGE OF ACCUMULATED CONDENSATE BACK TO THE SOIL VAPOR EXTRACTION (SVE) PIPING, OR THE DRIPLEG FOR THE SOLID PIPING, AS APPLICABLE.

7. LOCATION AND INSTALLATION OF HEADER PIPELINES, AND OTHER GAS MANAGEMENT FACILITIES MAY VARY TO ACCOMMODATE FIELD CONDITIONS, AND TO MAINTAIN A MINIMUM REQUIRED PIPELINE SLOPE. CONTRACTOR SHALL FIELD STAKE PRIOR TO INSTALLATION PROPOSED HEADER PIPELINE ROUTE TO ENSURE ALL PIPELINE ROUTE ALIGNMENTS, LOCATIONS AND ELEVATIONS WILL FIT ACTUAL FIELD CONDITIONS, AND MEET THE SYSTEM DESIGN OBJECTIVES PRESENTED IN THESE DRAWINGS. CONTRACTOR SHALL PREPARE PIPELINE ROUTE SURVEY NOTES TO INCLUDE PIPELINE STATIONING, SITE GRID COORDINATES, PIPELINE INVERT ELEVATION, EXISTING GROUND ELEVATION, PIPELINE DEPTH, PIPELINE SLOPE, CONSTRUCTION NOTES, PIPELINE FITTING INFORMATION, AND A COMPLETE JOB PIPELINE SUMMARY.

II. SYSTEM PIPING

1. ALL POLYVINYL CHLORIDE (PVC) PIPE AND FITTINGS SHALL BE SCHEDULE 80, OR APPROVED EQUIVALENT. THE PVC PIPE SHALL MEET ASTM D–1785 AND F–441 CLASSIFICATION AND ALL PVC FITTINGS SHALL MEET ASTM D–2467 AND F–439 CLASSIFICATION.

2. THE PHASE II SYSTEM SVE HEADER PIPELINES ARE TO BE CONSTRUCTED OF HIGH DENSITY POLYETHYLENE (HDPE) PIPE OF TYPE PE3408 RESIN. ALL HDPE PIPE SHALL MEET ASTM D–3350 CELL CLASSIFICATION PE345434C REQUIREMENTS WITH A MINIMUM RATED SDR 17 UNLESS OTHERWISE SPECIFIED. ALL HDPE FITTINGS SHALL HAVE A MINIMUM RATED SDR 11 OR APPROVED EQUIVALENT.

III. POLYETHYLENE PIPELINE INSTALLATION

1. DURING TRENCH (OUTSIDE OF PARKING LOT) AND PARKING LOT EXCAVATION AND PIPELINE INSTALLATION, PROPER SIDESLOPE OR BENCHING IS REQUIRED PER OSHA STANDARDS FOR ANY TRENCH/AREA WITH THE DEPTH OF FOUR (4) FEET OR MORE.

2. A LASER LEVEL OR EQUIVALENT METHOD SHALL BE USED TO MAINTAIN GRADES OF 0.5–PERCENT DURING EXCAVATION AND BEDDING GRADING FOR INSTALLATION OF ALL HDPE HEADER PIPELINES AS SHOWN ON DRAWINGS.

3. GRANULAR SAND BEDDING BACKFILL SHALL BE PLACED IN THE TRENCH (FOR OUTSIDE OF THE PARKING LOT INSTALLATION) ENSURING MATERIAL IS PLACED UNDER THE HAUNCHES OF THE PIPELINE. THE GRANULAR SAND BEDDING MATERIAL SHALL BE CLEAN FILL SAND FREE FROM CLAY LUMPS, ORGANIC AND OTHER DELETERIOUS MATERIAL. THE GRANULAR SAND BEDDING MATERIAL SHALL HAVE NO PARTICLES LARGER THAN ¼–INCH AND NO MORE THAN 10–PERCENT BY WEIGHT OF MATERIAL PASSING THE 200–SIEVE. THE BEDDING MATERIAL SHALL BE PLACED AND COMPACTED USING A MECHANICAL COMPACTION DEVICE SUCH AS A WALK BEHIND VIBRATORY COMPACTOR OR EQUIVALENT, IN A LOOSE LIFT NOT TO EXCEED NINE (9) INCHES ABOVE THE TOP OF THE PIPELINE. COMPACTION SHALL BE TO A DENSITY WHERE SUBSEQUENT PASSES WITH THE MECHANICAL COMPACTION DEVICE WILL NOT REDUCE THE SURFACE ELEVATION OF THE BACKFILL BY MORE THAN THREE–QUARTERS OF AN INCH.

4. EXCAVATED TRENCH MATERIAL (SOIL COVER) WILL BE USED AS A GENERAL BACKFILL TO THE LOWER DEPTH OF THE EXISTING COVER FOR PIPE THAT RUNS ACROSS LOVINGER, PROVIDED IT IS FREE OF REFUSE, ROCKS AND FOREIGN MATERIAL. THE REMAINING TRENCH SHALL BE BACKFILLED WITH COVER SOIL MATERIAL TO EQUIVALENT COMPACTION, AND THICKNESS. BACKFILLED AREAS SHALL BE GRADED TO MATCH ORIGINAL GRADE UNLESS SPECIFIED OTHERWISE IN THE DESIGN DRAWINGS. ALL AREAS TRENCHED SHALL BE BROUGHT BACK TO THE ORIGINAL CONDITION OR BETTER. AREAS IN THE PARKING LOT SHALL BE BROUGHT BACK TO THE SAME CONDITION OR BETTER.

5. EXCAVATION PARKING LOT PIPELINE ROUTES WILL BE BACKFILLED WITH 1"–3" GRAVEL STONE AND SHALL BE CLEAN FILL GRAVEL FREE FROM CLAY LUMPS AND OTHER DELETERIOUS MATERIAL, THIS PIPING WILL SIT ON GRAVEL FROM THE EXCAVATION.

IV. HEADER AND LATERAL PIPELINE PRESSURE TESTING

1. THE PROJECT COORDINATOR SHALL BE NOTIFIED BEFORE THE CONTRACTOR PERFORMS ANY PRESSURE TESTING PROCEDURE, SHALL BE PRESENT DURING THE TEST, AND APPROVE WITH SIGNATURE ALL PRESSURE TESTING REPORTS.

2. PRIOR TO PIPELINE INSTALLATION, SIMILAR SIZES OF POLYETHYLENE PIPELINE SHALL BE BUTT WELDED TOGETHER INTO TESTING SEGMENTS NOT TO EXCEED 1,000–FEET. SEGMENTS SHALL BE FITTED WITH A TEMPORARY CAP ON ONE END AND TESTING APPARATUS ON THE OTHER. THE SEGMENT TO BE TESTED SHALL BE LAID ON THE GROUND SURFACE AND ALLOWED TIME TO REACH CONSTANT AND/OR AMBIENT TEMPERATURE BEFORE INITIATING THE TEST. THE PRESSURE TEST SHALL BE PERFORMED DURING A PERIOD WHEN THE PIPELINE SEGMENT WILL BE OUT OF DIRECT SUNLIGHT WHEN POSSIBLE, I.E., EARLY MORNING, LATE EVENING, OR CLOUDY DAYS. THIS PROCEDURE WILL MINIMIZE THE PRESSURE CHANGES WHICH WILL OCCUR DURING TEMPERATURE FLUCTUATIONS.

3. THE TEST PRESSURE SHALL BE PERFORMED AT A MINIMUM 100 PSIG. PRESSURE TESTING GAUGE SHALL HAVE MAXIMUM INCREMENTS OF 0.1–PSIG. CONTRACTOR SHALL SUBMIT VERIFICATION AND RESULTS OF GAUGE CALIBRATION TO THE PROJECT COORDINATOR FOR APPROVAL.

4. THE ALLOWABLE PRESSURE DROP OBSERVED DURING THE TEST SHALL NOT EXCEED ONE PERCENT OF THE TESTING GAUGE PRESSURE OVER A PERIOD OF THREE (3) HOURS. THIS PRESSURE DROP SHALL BE CORRECTED FOR TEMPERATURE CHANGES BEFORE DETERMINING PASS OR FAILURE.

V. CONTROL VALVES

1. ALL CONTROL VALVES SHALL BE COMPLETE WITH ALL NECESSARY OPERATORS, ACTUATORS, HAND–WHEELS, WORM–GEAR OR LEVER ACTUATORS, STEM EXTENSIONS AND FLANGED STEM EXTENSION CASINGS AND OTHER ACCESSORIES OR APPURTENANCES WHICH ARE REQUIRED FOR THE INTENDED OPERATION.

2. CONTROL VALVES SHALL BE CAREFULLY INSPECTED DURING INSTALLATION. THE CONTROL VALVES SHALL BE OPENED WIDE AND THEN TIGHTLY CLOSED AND THE MOUNTING HARDWARE SHALL BE TESTED FOR TIGHTNESS. SPECIAL CARE SHALL BE TAKEN TO PREVENT ANY FOREIGN MATERIALS FROM BECOMING LODGED IN THE VALVE SEAT. ALL CONTROL VALVES SHALL BE CHECKED AND ADJUSTED FOR SMOOTH OPERATION.

3. INSTALL CONTROL VALVES WITH THE OPERATING STEM IN A POSITION WITH SUFFICIENT CLEARANCE AROUND THE CONTROL VALVE OPERATOR FOR PROPER OPERATION.

VI. ELECTRICAL SERVICE SPECIFICATIONS

1. DUE TO CLOSE PROXIMITY TO REFUSE, ALL UNDERGROUND WIRING AND COMPONENTS ARE TO BE OF EXPLOSION–PROOF CONSTRUCTION TO PREVENT GAS BUILD UP INTO ELECTRICAL COMPONENTS. SEAL OFF FITTINGS SHALL BE USED AT ALL ENCLOSURE PENETRATIONS.

2. ALL ELECTRICAL WORK TO BE DESIGNED AND EXECUTED IN ACCORDANCE WITH NATIONAL, STATE, LOCAL ELECTRICAL CODES, AND ANY OTHER BOARD HAVING JURISDICTION OVER THE ELECTRICAL INSTALLATION. ELECTRICAL SHOP DRAWINGS SHALL BE PREPARED AND PROVIDED BY THE ELECTRICAL CONTRACTOR FOR REVIEW BY THE PROJECT COORDINATOR PRIOR TO CONSTRUCTION. THE ELECTRICAL CONTRACTOR SHALL PROVIDE, AT THE TIME OF PROJECT COMPLETION, A COMPLETE "RECORD DRAWING" OF THE SAME.

***HAND SIGNATURE ON FILE**

Civil & Environmental Consultants, Inc.
555 Butterfield Road, Suite 300 - Lombard, IL 60148
630-963-6026 · 877-963-6026
www.cecinc.com

YEOMAN CREEK LANDFILL
PHASE 2
ADDITIONAL PROTECTIVE MEASURES
WAUKEGAN, ILLINOIS

TECHNICAL SPECIFICATIONS

DRAWN BY:	RJF	CHECKED BY:	AMK	APPROVED BY:	BRH*	DRAWING NO.:	C001
DATE:	DECEMBER 2015	DWG SCALE:	NOT TO SCALE	PROJECT NO:	121-067		

P:\2012\121-067\-CADD\Dwg\SW02-Phase II-Construction Set-11X17\121067-C001-Spec Sheet Revised.dwg{C001} LS:(12/21/2015 - akrueger) - LP: 12/21/2015 3:41 PM

TABLES

Table 1
Comparison of Soil Sampling Analytical Data to TACO Residential Standards
Yeoman Creek Landfill Superfund Site

Analyte	TACO Tier 1 Soil Remediation Objectives[a] for Residential Properties		SB-1A 6-7'	SB-2A 7-8'	SB-3A 7-8'	SB-4A 6-7'	SB-5A 6-7'
	Ingestion (mg/kg)	Inhalation (mg/kg)	8/21/2015	8/21/2015	8/21/2015	8/21/2015	8/21/2015
Organics							
1,1,1-Trichloroethane	---[c]	1,200[d]	<0.0011	<0.0011	<0.0011	<0.0011	<0.0013
1,1,2-Trichloroethane	310[b]	1,800[d]	<0.00092	<0.00093	<0.00091	<0.00090	<0.0011
1,1-Dichloroethane	7,800[b]	1,300[b, x]	<0.00098	<0.00099	<0.00097	<0.00095	<0.0011
1,1-Dichloroethylene	3,900[b]	290[b, x]	<0.0017	<0.0018	<0.0017	<0.0017	<0.0020
1,2,4-Trichlorobenzene	780[b]	3,200[b, x]	<0.039	<0.040	<0.040	<0.041	<0.043
1,2-Dibromo-3-chloropropane	0.46[e]	11[b, x]	<0.0020	<0.0021	<0.0020	<0.0020	<0.0024
1,2-Dibromoethane (Ethylene dibromide)	0.32[e]	0.06[e]	<0.0012	<0.0012	<0.0012	<0.0012	<0.0014
1,2-Dichlorobenzene (o – Dichlorobenzene)	7,000[b]	560[d, x]	<0.044	<0.044	<0.044	<0.045	<0.048
1,2-Dichloroethane (Ethylene dichloride)	7[e]	0.4[e]	<0.00070	<0.00071	<0.00070	<0.00069	<0.00082
1,2-Dichloropropane	9[e]	15[b, x]	<0.0012	<0.0013	<0.0012	<0.0012	<0.0014
1,3-Dichloropropene (1,3-Dichloropropylene, cis + trans)	6.4[e]	1.1[e, x]	<0.0013	<0.0014	<0.0013	<0.0013	<0.0016
1,4-Dichlorobenzene (p – Dichlorobenzene)	---[c]	11,000[b, x]	<0.047	<0.048	<0.048	<0.049	<0.052
2,4,5-TP (Silvex)	630[b]	---[c]	<0.097	<0.095	<0.096	<0.10	<0.11
2,4,5-Trichlorophenol	7,800[b]	---[c]	<0.083	<0.085	<0.085	<0.087	<0.092
2,4,6-Trichlorophenol	58[e]	200[e]	<0.13	<0.13	<0.13	<0.13	<0.14
2,4-Dichlorophenol	230[b]	---[c]	<0.087	<0.088	<0.088	<0.090	<0.096
2,4-Dimethylphenol	1,600[b]	---[c]	<0.14	<0.14	<0.14	<0.14	<0.15
2,4-Dinitrophenol	160[b]	---[c]	<0.64	<0.65	<0.65	<0.67	<0.71
2,4-Dinitrotoluene	0.9[e]	---[c]	<0.058	<0.059	<0.059	<0.060	<0.064
2,4-D[o]	780[b]	---[c]	<0.11	<0.11	<0.11	<0.11	<0.12
2,6-Dinitrotoluene	0.9[e]	---[c]	<0.072	<0.073	<0.073	<0.075	<0.079
2-Chlorophenol	390[b]	53,000[d]	<0.062	<0.063	<0.063	<0.065	<0.069
2-Methylphenol (o – Cresol)	3,900[b]	---[c]	<0.059	<0.059	<0.060	<0.061	<0.065
3,3'-Dichlorobenzidine	1[e]	---[c]	<0.051	<0.052	<0.052	<0.053	<0.056
4-Chloroaniline (p-Chloroaniline)	310[b]	---[c]	<0.17	<0.17	<0.17	<0.18	<0.19
Acenaphthene	4,700[b]	---[c]	<0.0066	<0.0067	0.019	<0.0068	<0.0073
Acetone	70,000[b]	100,000[d]	<0.0037	<0.0037	<0.0036	<0.0036	0.039
Alachlor[o]	8[e]	---[c]	<0.066	<0.064	<0.064	<0.14	<0.15
Aldicarb[o]	78[b]	---[c]	<0.36	<0.37	<0.37	<0.38	<0.40
Aldrin	0.04[e]	3[e]	<0.0075	<0.016	<0.017	<0.0077	<0.0075
Alpha -HCH (*alpha* -BHC)	0.1[e]	0.8[e]	<0.0046	<0.010	<0.010	<0.0047	<0.0046
Anthracene	23,000[b]	---[c]	<0.0061	<0.0062	0.048	<0.0063	<0.0067
Atrazine[o]	2700[b]	---[c]	<0.39	<0.38	<0.38	<0.83	<0.86
Benzene	12[e]	0.8[e]	<0.0011	<0.0011	<0.0010	<0.0010	<0.0012
Benzo(a)anthracene	0.9[e,w]	---[c]	0.015	0.007	0.11	0.012	0.013
Benzo(*a*)pyrene	0.9[e, w]	---[c]	0.016	<0.0072	0.094	<0.0073	0.016
Benzo(*b*)fluoranthene	0.9[e,w]	---[c]	0.021	<0.0080	0.14	0.017	0.027
Benzo(*k*)fluoranthene	9[e]	---[c]	0.014	<0.011	0.049	<0.011	<0.012
Benzoic Acid	310,000[b]	---[c]	<0.36	<0.37	<0.37	<0.38	<0.40
Bis(2-chloroethyl)ether	0.6[e]	0.2[e,]	<0.055	<0.056	<0.056	<0.057	<0.061
Bis(2-ethylhexyl)phthalate	46[e]	31,000[d]	<0.067	<0.068	<0.068	<0.069	<0.074
Bromodichloromethane (Dichlorobromomethane)	10[e]	3,000[d]	<0.00080	<0.00081	<0.00079	<0.00078	<0.00093
Bromoform	81[e]	53[e]	<0.00097	<0.00098	<0.00096	<0.00094	<0.0011

Table 1
Comparison of Soil Sampling Analytical Data to TACO Residential Standards
Yeoman Creek Landfill Superfund Site

Analyte	TACO Tier 1 Soil Remediation Objectives[a] for Residential Properties		SB-1A 6-7'	SB-2A 7-8'	SB-3A 7-8'	SB-4A 6-7'	SB-5A 6-7'
	Ingestion (mg/kg)	Inhalation (mg/kg)	8/21/2015	8/21/2015	8/21/2015	8/21/2015	8/21/2015
Butanol	7,800[b]	10,000[d]	<0.024	<0.024	<0.024	<0.023	<0.028
Butyl benzyl phthalate	16,000[b]	930[d]	<0.070	<0.070	<0.071	<0.072	<0.077
Carbazole	32[e]	---[c]	<0.091	<0.093	<0.093	<0.095	<0.10
Carbofuran[o]	390[b]	---[c]	<0.084	<0.085	<0.086	<0.088	<0.093
Carbon disulfide	7,800[b]	720[d, x]	<0.0017	<0.0018	<0.0017	<0.0017	<0.0020
Carbon tetrachloride	5[e]	0.3[e]	<0.0010	<0.0010	<0.0010	<0.00099	<0.0012
Chlordane	1.8[e]	72[e, x]	<0.036	<0.035	<0.035	<0.077	<0.080
Chlorobenzene (Monochlorobenzene)	1,600[b]	130[b, x]	<0.0011	<0.0011	<0.0011	<0.0011	<0.0013
Chlorodibromomethane (Dibromochloromethane)	1,600[b]	1,300[d]	<0.00055	<0.00055	<0.00054	<0.00053	<0.00064
Chloroform	100[e]	0.3[e]	<0.00093	<0.00094	<0.00092	<0.00090	<0.0011
Chrysene	88[e]	---[c]	0.028	0.018	0.13	0.015	0.02
cis -1,2-Dichloroethylene	780[b]	1,200[d]	<0.00097	<0.00098	<0.00096	<0.00094	<0.0011
Dalapon[o]	2,300[b]	---[c]	<0.088	<0.087	<0.088	<0.092	<0.096
DDD	3[e]	---[c]	<0.0037	<0.0036	<0.0036	<0.0079	<0.0082
DDE	2[e]	---[c]	<0.0031	<0.0030	<0.0030	<0.0065	<0.0068
DDT	2[e]	---[g, x]	<0.0098	<0.0095	<0.0095	<0.021	<0.022
Dibenzo(*a,h*)anthracene	0.09[e, w]	---[c]	<0.0071	<0.0072	0.021	<0.0073	<0.0078
Dieldrin[n]	0.04[e]	1[e]	<0.0025	<0.0025	<0.0025	<0.0054	<0.0056
Diethyl phthalate	63,000[b]	2,000[d]	<0.062	<0.063	<0.063	<0.064	<0.068
Di-*n* -butyl phthalate	7,800[b]	2,300[d]	<0.056	<0.056	<0.057	<0.058	<0.061
Di-*n* -octyl phthalate	1,600[b]	10,000[d]	<0.060	<0.060	<0.061	<0.062	<0.066
Dinoseb[o]	78[b]	---[c]	<0.19	<0.19	<0.19	<0.20	<0.21
Endosulfan[o] I	470[b]	---[c]	<0.0081	<0.0079	<0.0079	<0.017	<0.018
Endosulfan[o] II	470[b]	---[c]	<0.0030	<0.0029	<0.0029	<0.0064	<0.0067
Endothall[o]	1,600[b]	---[c]	Not analyzed				
Endrin	23[b]	---[c]	<0.0026	<0.0025	<0.0025	<0.0055	<0.0057
Ethylbenzene	7,800[b]	400[d, x]	<0.0012	<0.0012	<0.0012	<0.0011	<0.0014
Fluoranthene	3,100[b]	---[c]	0.035	0.014	0.32	0.032	0.032
Fluorene	3,100[b]	---[c]	<0.0051	<0.0052	0.044	<0.0053	<0.0057
Gamma -HCH (Lindane)[n]	0.5[e]	---[c, x]	<0.0040	<0.0039	<0.0039	<0.0085	<0.0089
Heptachlor	0.1[e]	0.1[e]	<0.0078	<0.0076	<0.0076	<0.017	<0.017
Heptachlor epoxide	0.07[e]	5[e]	<0.0066	<0.0064	<0.0064	<0.014	<0.015
Hexachlorobenzene	0.4[e]	1[e]	<0.0085	<0.0086	<0.0086	<0.0088	<0.0094
Hexachlorocyclopentadiene	550[b]	10[b, x]	<0.21	<0.21	<0.21	<0.22	<0.23
Hexachloroethane	78[b]	---[c]	<0.056	<0.056	<0.056	<0.058	<0.061
Indeno(1,2,3-*c,d*)pyrene	0.9[e,w]	---[c]	<0.0095	<0.0096	0.063	<0.0098	<0.010
Isophorone	15,600[b]	4,600[d]	<0.041	<0.042	<0.042	<0.043	<0.045
Methoxychlor[o]	390[b]	---[c]	<0.0036	<0.0035	<0.0035	<0.0076	<0.0080
Methyl bromide (Bromomethane)	110[b]	10[b, x]	<0.0017	<0.0018	<0.0017	<0.0017	<0.0020
Methyl tertiary-butyl ether	780[b]	8,800[d, x]	<0.0011	<0.0011	<0.0011	<0.0011	<0.0013
Methylene chloride (Dichloromethane)	85[e]	13[e]	<0.0036	<0.0036	<0.0035	<0.0035	<0.0042
Naphthalene	1,600[b]	170[b, x]	<0.0056	<0.0057	0.029	<0.0058	<0.0062
Nitrobenzene	39[b]	92[b, x]	<0.0091	<0.0092	<0.0093	<0.0095	<0.010
N -Nitrosodi-*n* -propylamine	0.09[e,]	---[c]	<0.045	<0.045	<0.045	<0.046	<0.049
N -Nitrosodiphenylamine	130[e]	---[c]	<0.043	<0.044	<0.044	<0.045	<0.048

Table 1
Comparison of Soil Sampling Analytical Data to TACO Residential Standards
Yeoman Creek Landfill Superfund Site

Analyte	TACO Tier 1 Soil Remediation Objectives[a] for Residential Properties		SB-1A 6-7'	SB-2A 7-8'	SB-3A 7-8'	SB-4A 6-7'	SB-5A 6-7'
	Ingestion (mg/kg)	Inhalation (mg/kg)	8/21/2015	8/21/2015	8/21/2015	8/21/2015	8/21/2015
Pentachlorophenol	3[e,j]	---[c]	<0.069	<0.068	<0.069	<0.072	<0.075
Phenol	23,000[b]	---[c]	<0.081	<0.082	<0.082	<0.084	<0.090
Picloram[o]	5,500[b]	---[c]	<0.079	<0.077	<0.078	<0.082	<0.085
Polychlorinated biphenyls (PCBs)[n]	1[h]	---[c,h]	<0.0036	<0.0035	0.16	<0.0038	<0.0039
Pyrene	2,300[b]	---[c]	0.036	0.017	0.21	0.026	0.03
Simazine[o]	390[b]	---[c]	<0.15	<0.14	<0.14	<0.31	<0.32
Styrene	16,000[b]	1,500[d, x]	<0.0011	<0.0011	<0.0011	<0.0011	<0.0013
Tetrachloroethylene (Perchloroethylene)	12[e]	11[e]	<0.00099	<0.0010	<0.00098	<0.00096	<0.0011
Toluene	16,000[b]	650[d, x]	<0.0017	<0.0017	<0.0016	<0.0016	<0.0019
Toxaphene[n]	0.6[e]	89[e]	<0.078	<0.076	<0.076	<0.17	<0.17
trans -1,2-Dichloroethylene	1,600[b]	3,100[d]	<0.0012	<0.0012	<0.0012	<0.0012	<0.0014
Trichloroethylene	58[e]	5[e]	<0.0013	<0.0013	<0.0013	<0.0012	<0.0015
Vinyl acetate	78,000[b]	1,000[b, x]	<0.0013	<0.0013	<0.0013	<0.0012	<0.0015
Vinyl chloride	0.46[e]	0.28[e]	<0.0011	<0.0011	<0.0011	<0.0011	<0.0013
Xylenes, Total	16,000[b]	320[d, x]	<0.0018	<0.0018	<0.0017	<0.0017	<0.0020
Inorganics							
Antimony	31[b]	---[c]	0.26	0.42	0.34	<0.24	0.32
Arsenic[l,n]	---[t]	750[e]	5.3	6.3	5.7	6.6	6.7
Barium	5,500[b]	690,000[b]	48	42	42	67	70
Beryllium	160[b]	1,300[e]	0.63	0.58	0.55	0.68	0.63
Boron	16,000[b]	---[c]	14.0	13.0	12.0	5.9	8.8
Cadmium[l,n]	78[b, r]	1,800[e]	0.24	0.24	0.2	0.14	0.25
Calcium[n]	---[g]	---[c]	73,000	76,000	42,000	11,000	21,000
Chloride	---[c]	---[c]	63	30	8.5	180	610
Chromium, Total	230[b]	270[e]	18	16	16	18	19
Chromium, ion, trivalent	120,000[b]	---[c]	Not analyzed; see Chromium, total				
Chromium, ion, hexavalent	230[b]	270[e]	Not analyzed; see Chromium, total				
Cobalt	4,700[b]	---[c]	8.3	8.9	7.9	11	9.3
Copper[n]	2,900[b]	---[c]	19	19	19	14	19
Cyanide (amenable)	1,600[b]	---[c]	<0.17	<0.17	<0.19	<0.19	<0.20
Fluoride	4,700[b]	---[c]	2.5	2.5	1	1.6	2.2
Iron	---[c]	---[c]	17,000	16,000	16,000	19,000	18,000
Lead	400[k]	---[c]	8.5	14	8.2	12	20
Magnesium[n]	325,000	---[c]	33000	34000	32000	8300	12000
Manganese	1,600[b,v]	69,000[b, x]	440	460	440	1000	520
Mercury[l,n,s]	23[b]	10[b, x]	<0.0060	<0.0063	0.018	0.011	0.038
Nickel[l]	1,600[b]	13,000[e]	21	22	19	20	19
Nitrate as N[p]	130,000[b]	---[c]	1.1	1.4	0.92	1.1	1.4
Phosphorus[n]	---[g]	---[c]	260	250	250	290	280
Potassium[n]	---[g]	---[c]	3700	3400	3200	1500	2100
Selenium[l,n]	390[b]	---[c]	<0.28	<0.27	<0.26	<0.29	0.31
Silver	390[b]	---[c]	<0.066	<0.063	<0.061	<0.069	<0.070
Sodium[n]	---[g]	---[c]	270	290	230	320	650
Sulfate	---[c]	---[c]	260	330	460	5	750

Table 1
Comparison of Soil Sampling Analytical Data to TACO Residential Standards
Yeoman Creek Landfill Superfund Site

Analyte	TACO Tier 1 Soil Remediation Objectives[a] for Residential Properties		SB-1A 6-7'	SB-2A 7-8'	SB-3A 7-8'	SB-4A 6-7'	SB-5A 6-7'
	Ingestion (mg/kg)	Inhalation (mg/kg)	8/21/2015	8/21/2015	8/21/2015	8/21/2015	8/21/2015
Thallium	6.3[b,u]	---[c]	<0.28	<0.27	<0.26	<0.29	<0.29
Vanadium	550[b]	---[c]	21	19	19	32	26
Zinc[l]	23,000[b]	---[c]	39	38	37	32	57

Notes:

[a] Soil remediation objectives based on human health criteria only.

[b] Calculated values correspond to a target hazard quotient of 1.

[c] No toxicity criteria available for the route of exposure.

[d] Soil saturation concentration (C [sat]) = the concentration at which the absorptive limits of the soil particles, the solubility limits of the available soil moisture, and saturation of soil pore air have been reached. Above the soil saturation concentration, the assumptions regarding vapor transport to air and/or dissolved phase transport to groundwater (for chemicals which are liquid at ambient soil temperatures) have been violated, and alternative modeling approaches are required.

[e] Calculated values correspond to a cancer risk level of 1 in 1,000,000.

[g] Chemical-specific properties are such that this route is not of concern at any soil contaminant concentration.

[h] 40 CFR 761 contains applicability requirements and methodologies for the development of PCB remediation objectives.

[i] Soil remediation objective for pH of 6.8. If soil pH is other than 6.8, refer to Appendix B, Tables C and D of Title 35 IAC Part 742.

[j] Ingestion soil remediation objective adjusted by a factor of 0.5 to account for dermal route.

[k] A preliminary remediation goal of 400 mg/kg has been set for lead based on Revised Interim Soil Lead Guidance for CERCLA Sites and RCRA Corrective Action Facilities, OSWER Directive #9355.4-12.

[l] Potential for soil-plant-human exposure.

[m] The person conducting the remediation has the option to use: 1) TCLP or SPLP test results to compare with the remediation objectives listed in this Table; 2) where applicable, the total amount of contaminant in the soil sample results to compare with pH specific remediation objectives listed in Appendix B, Table C or D of this Part (see Section 742.510); or 3) the appropriate background value listed in Appendix A, Table G. If the person conducting the remediation wishes to calculate soil remediation objectives based on background concentrations, this should be done in accordance with Subpart D of Title 35 IAC Part 742.

[n] The Agency reserves the right to evaluate the potential for remaining contaminant concentrations to pose significant threats to crops, livestock, or wildlife.

[o] For agrichemical facilities, remediation objectives for surficial soils which are based on field application rates may be more appropriate for currently registered pesticides. Consult the Agency for further information.

[p] For agrichemical facilities, soil remediation objectives based on site-specific background concentrations of Nitrate as N may be more appropriate. Such determinations shall be conducted in accordance with the procedures set forth in Subparts D and I of Title 35 IAC Part 742.

[q] The TCLP extraction must be done using water at a pH of 7.0.

[r] Value based on dietary Reference Dose.

[s] Value for Ingestion based on Reference Dose for Mercuric chloride (CAS No. 7487-94-7); value for Inhalation based on Reference Concentration for elemental Mercury (CAS No. 7439-97-6). Inhalation remediation objective only applies at sites where elemental mercury is a contaminant of concern.

[t] See "Concentrations of Inorganic Chemicals in Background Soils", Table G of Appendix A, Title 35 IAC Part 742.

[u] Value based on Reference Dose for Thallium sulfate (CAS No. 7446-18-6).

[v] Value based on Reference Dose adjusted for dietary intake.

[w] For sites located in any populated area as defined in Section 742.200, Appendix A, Table H may be used.

[x] The remediation objectives for these chemicals must also include the construction worker inhalation objective in Appendix B, Table B.

Table 2
Phase 2 Protective Measures - Proposed Methane Monitoring Schedule
Yeoman Creek Landfill Superfund Site

Probe ID	Current Monitoring Schedule	Proposed Monitoring Schedule	Justification
201	Weekly	Monthly	No methane detected (data back to Sept 2006).
218R	4 days per week	2 Days per week	Reduced frequency based upon lack of detections in 2014.
219	Weekly	Monthly	No methane detected (data back to Sept 2006).
306	Weekly	Weekly	No change proposed.
310	4 days per week	2 Days per week	Historically low sporadic detections only.
311R	4 days per week	2 Days per week	Week Historically low sporadic detections only; exceedances occurred in late 2014 (Oct - Dec).
312	Weekly	Monthly	No methane detected since 2006.
326R	4 days per week	2 Days per week	Exceedances of LEL continue; reduced frequency based upon LFG-311R and LFG-218R being closer to the TNH Bldg.
327R	4 days per week	2 Days per week	Exceedances of LEL continue; reduced frequency based upon LFG-311R and LFG-218R being closer to the TNH Bldg.
328R	4 days per week	2 Days per week	Exceedances of LEL continue; reduced frequency based upon LFG-311R and LFG-218R being closer to the TNH Bldg.
329R	4 days per week	2 Days per week	Exceedances of LEL continue; reduced frequency based upon LFG-311R and LFG-218R being closer to the TNH Bldg.
330R	4 days per week	2 Days per week	Exceedances of LEL continue; reduced frequency based upon LFG-311R and LFG-218R being closer to the TNH Bldg.
331R	4 days per week	2 Days per week	Historically low sporadic detections only.
340	1 day per week	Monthly	Installed August 2015; change to monthly monitoring after 6 months of observations below 50% of the LEL
341	1 day per week	Monthly	Installed August 2015; change to monthly monitoring after 6 months of observations below 50% of the LEL
342	1 day per week	Monthly	Installed August 2015; change to monthly monitoring after 6 months of observations below 50% of the LEL
Terrace Nursing Home Parking Lot System			
Riser Pipe	4 days per week	2 Days per week	Monitoring only when the parking lot system is on.
Terrace Nursing Home - Phase 2 Extraction System			
PVS-1	Weekly	Weekly	Passive vent for the Phase 2 Extraction System
PVS-2	Weekly	Weekly	Passive vent for the Phase 2 Extraction System

Table 2
Phase 2 Protective Measures - Proposed Methane Monitoring Schedule
Yeoman Creek Landfill Superfund Site

Probe ID	Current Monitoring Schedule	Proposed Monitoring Schedule	Justification
PVS-3	Weekly	Weekly	Passive vent for the Phase 2 Extraction System
PVS-4	Weekly	Weekly	Passive vent for the Phase 2 Extraction System
PVS-5	Weekly	Weekly	Passive vent for the Phase 2 Extraction System
Terrace Nursing Home - Basement Continuous Methane Detectors			
MD-1	Continuous	Continuous	Methane Detector (installed Jan 2014, alarm set @10% LEL)
MD-2	Continuous	Continuous	Methane Detector (installed Jan 2014, alarm set @10% LEL)
MD-3	Continuous	Continuous	Methane Detector (installed Jan 2014, alarm set @10% LEL)
MD-4	Continuous	Continuous	Methane Detector (installed Jan 2014, alarm set @10% LEL)
MD-5	Continuous	Continuous	Methane Detector (installed Jan 2014, alarm set @10% LEL)
MD-6	Continuous	Continuous	Methane Detector (installed Jan 2014, alarm set @10% LEL)
MD-7	Continuous	Continuous	Methane Detector (installed Jan 2014, alarm set @10% LEL)
MD-8	Continuous	Continuous	Methane Detector (installed Jan 2014, alarm set @10% LEL)

TABLE 3
PHASE 2 PROTECTIVE MEASURES IMPLEMENTATION/CONSTRUCTION SCHEDULE
YEOMAN CREEK LANDFILL SUPERFUND SITE

Task	Estimated Duration (Days)	1st Month				2nd Month			
Phase 2 Protective Measures Implementation and Construction	20								
Site Preparation	5								
Parking Lot Excavation/Soil Placement	15								
TNH Gas System Construction	5								
Parking Lot Restoration	5								
Gas Probe Replacement	2								
TNH Gas System Startup	2								
Construction Summary to USEPA/IEPA	20								

Days = working days
Schedule/dates shown are tentative and are subject to USEPA/IEPA approval and coordination with TNH.

APPENDIX A

PARKING LOT BORING LOGS

Civil & Environmental Consultants, Inc.
333 Baldwin Road
Pittsburgh, PA 15205

BORING NUMBER LFG 340

CLIENT Yeoman Creek Remediation Group
PROJECT NAME Yeoman Creek Landfill Superfund Site
PROJECT NUMBER CEC Project 121-067
PROJECT LOCATION Terrace Nursing Home, Waukegan, Illinois
DATE STARTED 8/21/15 **COMPLETED** 8/21/15
GROUND ELEVATION **BACKFILL** Set Gas Probe
DRILLING CONTRACTOR Johnson Probing
GROUND WATER LEVELS:
DRILLING METHOD Geoprobe MC5
BEFORE CORING ---
CEC REP JDL **CHECKED BY** BRH
AT END OF DRILLING ---
NOTES LFG 340 installed in boring after completion
AFTER DRILLING ---

DEPTH (ft)	SAMPLE TYPE NUMBER	TESTS	GRAPHIC LOG	MATERIAL DESCRIPTION
0				Dark brown silty CLAY, trace fine to medium sand, moist, medium stiff, fill
				Light brown silty CLAY, moist, medium stiff, fill
		Methane Reading 17.4% at 1215 Methane Reading 1.0% at 1321		Orangish brown silty SAND, moist, loose, fill
5				Brown silty CLAY, some medium to coarse gravel, moist, medium stiff, fill
				Dark gray silty CLAY, trace fine sand, moist, soft, thin gravel layers throughout, fill
10				Bottom of hole at 10.0 feet.

BORING NUMBER LFG 341

Civil & Environmental Consultants, Inc.
333 Baldwin Road
Pittsburgh, PA 15205

CLIENT Yeoman Creek Remediation Group
PROJECT NAME Yeoman Creek Landfill Superfund Site
PROJECT NUMBER CEC Project 121-067
PROJECT LOCATION Terrace Nursing Home, Waukegan, Illinois
DATE STARTED 8/21/15 **COMPLETED** 8/21/15
GROUND ELEVATION ____ **BACKFILL** Set Gas Probe
DRILLING CONTRACTOR Johnson Probing
GROUND WATER LEVELS:
DRILLING METHOD Geoprobe MC5
BEFORE CORING ---
CEC REP JDL **CHECKED BY** BRH
AT END OF DRILLING ---
NOTES LFG 341 installed in boring after completion
AFTER DRILLING ---

DEPTH (ft)	SAMPLE TYPE NUMBER	TESTS	GRAPHIC LOG	MATERIAL DESCRIPTION
0				Dark brown silty CLAY, trace fine to medium sand, moist, medium stiff, fill
				Light brown clayey SILT, trace fine gravel, moist, medium stiff, fill
		Methane Reading 0.0% at 1130		Orangish brown silty SAND, moist, loose, fill
5		Methane Reading 0.2% at 1302		Light brown silty CLAY, trace fine gravel, and fine to medium sand, moist, soft, fill
				Gray silty CLAY, trace fine to medium sand, moist, soft, fill
10				Bottom of hole at 10.0 feet.

BORING NUMBER LFG 342

Civil & Environmental Consultants, Inc.
333 Baldwin Road
Pittsburgh, PA 15205

CLIENT Yeoman Creek Remediation Group
PROJECT NAME Yeoman Creek Landfill Superfund Site
PROJECT NUMBER CEC Project 121-067
PROJECT LOCATION Terrace Nursing Home, Waukegan, Illinois
DATE STARTED 8/21/15 **COMPLETED** 8/21/15
GROUND ELEVATION ____ **BACKFILL** Set Gas Probe
DRILLING CONTRACTOR Johnson Probing
GROUND WATER LEVELS:
DRILLING METHOD Geoprobe MC5
BEFORE CORING ---
CEC REP JDL **CHECKED BY** BRH
AT END OF DRILLING ---
NOTES LFG 342 installed in boring after completion
AFTER DRILLING ---

DEPTH (ft)	SAMPLE TYPE NUMBER	TESTS	GRAPHIC LOG	MATERIAL DESCRIPTION
0				Light brown clayey SILT, some fine to medium gravel, moist, medium stiff, fill
				Dark gray to black CINDERS, moist, loose, fill
				Light brown clayey SILT, trace coarse sand, moist, soft, fill
		Methane Reading 0.0% at 1100		
5		Methane Reading 0.1% at 1245		
				Light gray silty CLAY, some fine to medium gravel, moist, soft, fill
10				Bottom of hole at 10.0 feet.

Civil & Environmental Consultants, Inc.
333 Baldwin Road
Pittsburgh, PA 15205

BORING NUMBER SB-1A

CLIENT Yeoman Creek Remediation Group
PROJECT NAME Yeoman Creek Landfill Superfund Site
PROJECT NUMBER CEC Project 121-067
PROJECT LOCATION Terrace Nursing Home, Waukegan, Illinois
DATE STARTED 8/21/15 **COMPLETED** 8/21/15
GROUND ELEVATION ---
BACKFILL Cuttings/Bentonite
DRILLING CONTRACTOR Johnson Probing
GROUND WATER LEVELS:
DRILLING METHOD Geoprobe MC5
BEFORE CORING ---
CEC REP JDL **CHECKED BY** BRH
AT END OF DRILLING ---
NOTES Boring backfilled with soil cuttings and bentonite after completion.
AFTER DRILLING ---

DEPTH (ft)	SAMPLE TYPE NUMBER	RECOVERY %	TESTS	GRAPHIC LOG	MATERIAL DESCRIPTION	PID (ppm)
0					ASPHALT, and gravel	
		95	Soil Sample Collected from 6-7' (Full CCDD MAC List)		Brown silty CLAY, trace fine gravel, and fine to coarse sand, moist, very stiff, clay plug	0.0
5		95				0.0
		65			Brown silty CLAY, trace fine gravel, and fine to coarse sand, moist, soft, clay plug	0.2
		95			Brown silty CLAY, with peat, moist, soft, clay plug	0.0
10		95			Brown silty CLAY, trace fine to medium sand, moist, soft, clay plug	0.0
					Brown silty CLAY, with peat, moist, soft, clay plug	
		95			Gray silty CLAY, trace fine sand, wet, soft, sand lense at 14'	0.0
15					Gray silty CLAY, trace fine sand, and coarse gravel, moist, soft	
					Bottom of hole at 15.0 feet.	

Civil & Environmental Consultants, Inc.
333 Baldwin Road
Pittsburgh, PA 15205

BORING NUMBER SB-2A

CLIENT Yeoman Creek Remediation Group
PROJECT NAME Yeoman Creek Landfill Superfund Site
PROJECT NUMBER CEC Project 121-067
PROJECT LOCATION Terrace Nursing Home, Waukegan, Illinois
DATE STARTED 8/21/15 **COMPLETED** 8/21/15
GROUND ELEVATION ---
BACKFILL Cuttings/Bentonite
DRILLING CONTRACTOR Johnson Probing
GROUND WATER LEVELS:
DRILLING METHOD Geoprobe MC5
BEFORE CORING ---
CEC REP JDL **CHECKED BY** BRH
AT END OF DRILLING ---
NOTES Boring backfilled with soil cuttings and bentonite after completion.
AFTER DRILLING ---

DEPTH (ft)	SAMPLE TYPE NUMBER	RECOVERY %	TESTS	GRAPHIC LOG	MATERIAL DESCRIPTION	PID (ppm)
0					ASPHALT, and gravel	
		96	Soil Sample Collected from 7-8' (Full CCDD MAC List)		Brown silty CLAY, trace fine gravel, and fine to coarse sand, moist, very stiff, clay plug	0.0
5		95				3.6
10					Brown silty CLAY, with peat, moist, soft, clay plug	0.0
					Brown silty CLAY, trace coarse gravel, moist, soft, clay plug	0.6
		96			Black PEAT, with brick and coarse gravel, moist, soft, debris layer	0.0
15					Black PEAT, with plant fragments, moist, soft	
					Bottom of hole at 15.0 feet.	

Civil & Environmental Consultants, Inc.
333 Baldwin Road
Pittsburgh, PA 15205

BORING NUMBER SB-3A

CLIENT Yeoman Creek Remediation Group
PROJECT NAME Yeoman Creek Landfill Superfund Site
PROJECT NUMBER CEC Project 121-067
PROJECT LOCATION Terrace Nursing Home, Waukegan, Illinois
DATE STARTED 8/21/15 **COMPLETED** 8/21/15
GROUND ELEVATION **BACKFILL** Cuttings/Bentonite
DRILLING CONTRACTOR Johnson Probing
GROUND WATER LEVELS:
DRILLING METHOD Geoprobe MC5
BEFORE CORING ---
CEC REP JDL **CHECKED BY** BRH
AT END OF DRILLING ---
NOTES Methane Reading 2.9% at 1115; Boring backfilled with soil cuttings and cement/bentonite after completion.
AFTER DRILLING ---

DEPTH (ft)	SAMPLE TYPE NUMBER	RECOVERY %	TESTS	GRAPHIC LOG	MATERIAL DESCRIPTION	PID (ppm)
0					ASPHALT, and gravel	
		96	Soil Sample Collected from 7-8' (Full CCDD MAC List)		Brown silty CLAY, trace fine gravel, and fine to coarse sand, moist, very stiff, clay plug	0.0
5		93				0.0
10		95			Brown silty CLAY, trace fine gravel, and fine to coarse sand, moist, medium stiff, with brick pieces, clay plug	0.0
		95				0.0
					Dark gray silty CLAY, trace medium gravel, and brick and wood, wet, loose, fill	
15		95			Brown silty SAND, trace fine gravel, and fine to coarse sand, moist, soft, debris	0.0
					Bottom of hole at 15.0 feet.	

BORING NUMBER SB-4A

Civil & Environmental Consultants, Inc.
333 Baldwin Road
Pittsburgh, PA 15205

CLIENT Yeoman Creek Remediation Group
PROJECT NAME Yeoman Creek Landfill Superfund Site
PROJECT NUMBER CEC Project 121-067
PROJECT LOCATION Terrace Nursing Home, Waukegan, Illinois
DATE STARTED 8/21/15 **COMPLETED** 8/21/15
GROUND ELEVATION **BACKFILL** Cuttings/Bentonite
DRILLING CONTRACTOR Johnson Probing
GROUND WATER LEVELS:
DRILLING METHOD Geoprobe MC5
BEFORE CORING ---
CEC REP JDL **CHECKED BY** BRH
AT END OF DRILLING ---
NOTES Methane Reading 2.2% at 1120; Boring backfilled with soil cuttings and bentonite after completion.
AFTER DRILLING ---

DEPTH (ft)	SAMPLE TYPE NUMBER	RECOVERY %	TESTS	GRAPHIC LOG	MATERIAL DESCRIPTION
0					ASPHALT, and gravel
		71			Brown silty CLAY, trace fine gravel, and fine to coarse sand, moist, medium stiff, fill
5		95	Soil Sample Collected from 6-7' (Full CCDD MAC List)		
		93			Dark gray silty GRAVEL, trace fine to medium sand, and brick, wet, loose, debris layer
					Gray silty CLAY, trace fine to medium gravel, and wood fragments, moist, soft, debris layer
10					Bottom of hole at 10.0 feet.

GENERAL BH / TP / WELL CCDD BORING LOGS.GPJ CEC.GDT 9/30/15

Civil & Environmental Consultants, Inc.
333 Baldwin Road
Pittsburgh, PA 15205

BORING NUMBER SB-5A

CLIENT Yeoman Creek Remediation Group
PROJECT NAME Yeoman Creek Landfill Superfund Site
PROJECT NUMBER CEC Project 121-067
PROJECT LOCATION Terrace Nursing Home, Waukegan, Illinois
DATE STARTED 8/21/15 **COMPLETED** 8/21/15
GROUND ELEVATION ---
BACKFILL Cuttings/Bentonite
DRILLING CONTRACTOR Johnson Probing
GROUND WATER LEVELS:
DRILLING METHOD Geoprobe MC5
BEFORE CORING ---
CEC REP JDL **CHECKED BY** BRH
AT END OF DRILLING ---
NOTES Methane Reading 0.0% at 1110; Boring backfilled with soil cuttings and cement/bentonite after completion.
AFTER DRILLING ---

DEPTH (ft)	SAMPLE TYPE NUMBER	RECOVERY %	TESTS	GRAPHIC LOG	MATERIAL DESCRIPTION	PID (ppm)
0					ASPHALT, and gravel	
		71	Soil Sample Collected from 6-7' (Full CCDD MAC List)		Reddish brown silty CLAY, some fine to coarse sand, trace coarse gravel, moist, medium stiff, gravel layer at 2.5', fill	0.4
5		85			Dark brown gravelly CLAY, some fine to coarse sand, moist, soft, fill, LFG 311R extraction trench	0.4
		75			Gray silty SAND, trace fine to medium gravel, wet, loose, fill, LFG 311R extraction trench	
10		0				
15					Light gray silty CLAY, some wood and brick fragments, moist, medium stiff, fill	0.0
					Bottom of hole at 15.0 feet.	

APPENDIX B

SOIL SAMPLING LABORATORY ANALYSIS

TestAmerica

THE LEADER IN ENVIRONMENTAL TESTING

ANALYTICAL REPORT

TestAmerica Laboratories, Inc.
TestAmerica Chicago
2417 Bond Street
University Park, IL 60484
Tel: (708)534-5200

TestAmerica Job ID: 500-100254-1
Client Project/Site: CCDD - Yeoman Creek

For:
Civil & Environmental Consultants Inc
555 Butterfield Road
Suite 300
Lombard, Illinois 60148

Attn: Angela M. Krueger

Jodie Bracken

Authorized for release by:
8/28/2015 5:33:16 PM
Jodie Bracken, Project Management Assistant II
jodie.bracken@testamericainc.com

Designee for

Richard Wright, Senior Project Manager
(708)534-5200
richard.wright@testamericainc.com

LINKS

Review your project results through TotalAccess

Have a Question? Ask The Expert

Visit us at: www.testamericainc.com

The test results in this report meet all 2003 NELAC and 2009 TNI requirements for accredited parameters, exceptions are noted in this report. This report may not be reproduced except in full, and with written approval from the laboratory. For questions please contact the Project Manager at the e-mail address or telephone number listed on this page.

This report has been electronically signed and authorized by the signatory. Electronic signature is intended to be the legally binding equivalent of a traditionally handwritten signature.

Results relate only to the items tested and the sample(s) as received by the laboratory.

Table of Contents

Cover Page 1
Table of Contents 2
Case Narrative 3
Detection Summary 5
Method Summary 9
Sample Summary 10
Client Sample Results 11
Definitions 31
QC Association 33
Surrogate Summary 39
QC Sample Results 41
Chronicle 60
Certification Summary 66
Chain of Custody 67
Receipt Checklists 68

Job ID: 500-100254-1

Laboratory: TestAmerica Chicago

Narrative

Job Narrative
500-100254-1

Comments
No additional comments.

Receipt
The samples were received on 8/21/2015 3:15 PM; the samples arrived in good condition, properly preserved and, where required, on ice. The temperature of the cooler at receipt was 3.4º C.

GC/MS VOA
Method(s) 8260B: The following analyte recovered outside control limits for the LCS/LCSD associated with 500-301819: Bromomethane. This is not indicative of a systematic control problem because this was a random marginal exceedance. Qualified results have been reported.

Method(s) 8260B: The following analyte recovered outside control limits for theLCS associated with 301884: Bromomethane. This is not indicative of a systematic control problem because these were random marginal exceedances. Qualified results have been reported.

No additional analytical or quality issues were noted, other than those described above or in the Definitions/Glossary page.

GC/MS Semi VOA
No analytical or quality issues were noted, other than those described in the Definitions/Glossary page.

GC Semi VOA
Method(s) 8081B: The laboratory control sample (LCS) for preparation batch 500-301630 and analytical batch 500-301736 recovered outside control limits for the following analytes: Endosulfan II, alpha-Chlordane and 4,4'-DDT. These analytes were biased high in the LCS and were not detected in the associated samples; therefore, the data have been reported.

Method(s) 8081B: The following samples was diluted due to the nature of the sample matrix: SB-3A 7-8' (500-100254-1), SB-4A 6-7' (500-100254-2), SB-5A 6-7' (500-100254-3), SB-1A 6-7' (500-100254-4), SB-2A 7-8' (500-100254-5), (500-100254-F-1-C MS) and (500-100254-F-1-D MSD). Elevated reporting limits (RLs) are provided.

Method(s) 8081B: The following samples required a dilution due to the nature of the sample matrix: SB-4A 6-7' (500-100254-2) and SB-5A 6-7' (500-100254-3). Because of this dilution, the surrogate spike concentration in the sample was reduced to a level where the recovery calculation does not provide useful information.

Method(s) 8081B: The following samples required a mercury clean-up, via EPA Method 3660A, to reduce matrix interferences caused by sulfur: SB-4A 6-7' (500-100254-2) and SB-5A 6-7' (500-100254-3). The reagent lot number used was: 114634.

Method(s) 8082A: The following samples required a mercury clean-up, via EPA Method 3660A, to reduce matrix interferences caused by sulfur: SB-3A 7-8' (500-100254-1), SB-4A 6-7' (500-100254-2), SB-5A 6-7' (500-100254-3), (500-100254-F-1-E MS) and (500-100254-F-1-F MSD). The reagent lot number used was: 114634.

No additional analytical or quality issues were noted, other than those described above or in the Definitions/Glossary page.

Metals
No analytical or quality issues were noted, other than those described in the Definitions/Glossary page.

General Chemistry
Method(s) 300.0, 9056, 9056A: Manual integration was performed on the following IC8 samples in batch 500-301403 due to the software identifying the baseline incorrectly: SB-3A 7-8' (500-100254-1), SB-4A 6-7' (500-100254-2), SB-5A 6-7' (500-100254-3), SB-1A 6-7' (500-100254-4), SB-2A 7-8' (500-100254-5), (CCB 500-301403/31), (CCV 500-301403/16), (CCV 500-301403/30), (CCV 500-301403/49), (CCV 500-301403/9), (ICB 500-301403/2), (ICV 500-301403/1), (LCS 500-301361/2-A) and (MB 500-301361/1-A).

Method(s) 300.0, 9056A: Manual integration was performed on the following IC8 samples in batch 500-301734 due to the software

Job ID: 500-100254-1 (Continued)

Laboratory: TestAmerica Chicago (Continued)

identifying the baseline incorrectly: SB-4A 6-7' (500-100254-2), SB-5A 6-7' (500-100254-3), (CCB 500-301734/14), (CCV 500-301734/13), (ICB 500-301734/2), (ICV 500-301734/1), (LCS 500-301361/2-A) and (MB 500-301361/1-A).

No additional analytical or quality issues were noted, other than those described above or in the Definitions/Glossary page.

Organic Prep
No analytical or quality issues were noted, other than those described in the Definitions/Glossary page.

Detection Summary

Client: Civil & Environmental Consultants Inc
Project/Site: CCDD - Yeoman Creek

TestAmerica Job ID: 500-100254-1

Client Sample ID: SB-3A 7-8' — Lab Sample ID: 500-100254-1

Analyte	Result	Qualifier	RL	MDL	Unit	Dil Fac	D	Method	Prep Type
Acenaphthene	0.019	J	0.037	0.0067	mg/Kg	1	☼	8270D	Total/NA
Acenaphthylene	0.0061	J	0.037	0.0049	mg/Kg	1	☼	8270D	Total/NA
Anthracene	0.048		0.037	0.0062	mg/Kg	1	☼	8270D	Total/NA
Benzo[a]anthracene	0.11		0.037	0.0050	mg/Kg	1	☼	8270D	Total/NA
Benzo[a]pyrene	0.094		0.037	0.0072	mg/Kg	1	☼	8270D	Total/NA
Benzo[b]fluoranthene	0.14		0.037	0.0080	mg/Kg	1	☼	8270D	Total/NA
Benzo[g,h,i]perylene	0.049		0.037	0.012	mg/Kg	1	☼	8270D	Total/NA
Benzo[k]fluoranthene	0.049		0.037	0.011	mg/Kg	1	☼	8270D	Total/NA
Chrysene	0.13		0.037	0.010	mg/Kg	1	☼	8270D	Total/NA
Dibenz(a,h)anthracene	0.021	J	0.037	0.0072	mg/Kg	1	☼	8270D	Total/NA
Fluoranthene	0.32		0.037	0.0069	mg/Kg	1	☼	8270D	Total/NA
Fluorene	0.044		0.037	0.0052	mg/Kg	1	☼	8270D	Total/NA
Indeno[1,2,3-cd]pyrene	0.063		0.037	0.0096	mg/Kg	1	☼	8270D	Total/NA
Naphthalene	0.029	J	0.037	0.0057	mg/Kg	1	☼	8270D	Total/NA
Phenanthrene	0.30		0.037	0.0052	mg/Kg	1	☼	8270D	Total/NA
Pyrene	0.21		0.037	0.0074	mg/Kg	1	☼	8270D	Total/NA
PCB-1248	0.16		0.018	0.0071	mg/Kg	1	☼	8082A	Total/NA
Polychlorinated biphenyls, Total	0.16		0.018	0.0035	mg/Kg	1	☼	8082A	Total/NA
Aluminum	9100		10	2.6	mg/Kg	1	☼	6010B	Total/NA
Antimony	0.34	J F1	1.0	0.22	mg/Kg	1	☼	6010B	Total/NA
Arsenic	5.7		0.52	0.24	mg/Kg	1	☼	6010B	Total/NA
Barium	42		0.52	0.096	mg/Kg	1	☼	6010B	Total/NA
Beryllium	0.55		0.21	0.045	mg/Kg	1	☼	6010B	Total/NA
Boron	12		2.6	0.37	mg/Kg	1	☼	6010B	Total/NA
Cadmium	0.20		0.10	0.030	mg/Kg	1	☼	6010B	Total/NA
Calcium	42000		52	17	mg/Kg	5	☼	6010B	Total/NA
Chromium	16		0.52	0.090	mg/Kg	1	☼	6010B	Total/NA
Cobalt	7.9		0.26	0.059	mg/Kg	1	☼	6010B	Total/NA
Copper	19		0.52	0.11	mg/Kg	1	☼	6010B	Total/NA
Iron	16000		10	4.0	mg/Kg	1	☼	6010B	Total/NA
Lead	8.2		0.26	0.13	mg/Kg	1	☼	6010B	Total/NA
Magnesium	32000		5.2	2.1	mg/Kg	1	☼	6010B	Total/NA
Manganese	440		0.52	0.10	mg/Kg	1	☼	6010B	Total/NA
Nickel	19		0.52	0.14	mg/Kg	1	☼	6010B	Total/NA
Potassium	3200		26	4.3	mg/Kg	1	☼	6010B	Total/NA
Sodium	230	F1	52	6.9	mg/Kg	1	☼	6010B	Total/NA
Strontium	54		0.26	0.032	mg/Kg	1	☼	6010B	Total/NA
Vanadium	19		0.26	0.077	mg/Kg	1	☼	6010B	Total/NA
Zinc	37	B	1.0	0.33	mg/Kg	1	☼	6010B	Total/NA
Mercury	0.018		0.018	0.0061	mg/Kg	1	☼	7471B	Total/NA
pH	8.31		0.200	0.200	SU	1		9045D	Total/NA
Chloride	8.5		2.1	0.80	mg/Kg	1	☼	9056A	Total/NA
Fluoride	1.0	J	2.1	0.64	mg/Kg	1	☼	9056A	Total/NA
Nitrate as N	0.92	J	2.1	0.48	mg/Kg	1	☼	9056A	Total/NA
Sulfate	460		11	6.7	mg/Kg	5	☼	9056A	Total/NA
Phosphorus as P	250	F1	75	11	mg/Kg	2	☼	SM 4500 P E	Total/NA

Client Sample ID: SB-4A 6-7' — Lab Sample ID: 500-100254-2

This Detection Summary does not include radiochemical test results.

Client Sample ID: SB-4A 6-7' (Continued) — Lab Sample ID: 500-100254-2

Analyte	Result	Qualifier	RL	MDL	Unit	Dil Fac	D	Method	Prep Type
Benzo[a]anthracene	0.012	J	0.038	0.0051	mg/Kg	1	☼	8270D	Total/NA
Benzo[b]fluoranthene	0.017	J	0.038	0.0082	mg/Kg	1	☼	8270D	Total/NA
Chrysene	0.015	J	0.038	0.010	mg/Kg	1	☼	8270D	Total/NA
Fluoranthene	0.032	J	0.038	0.0070	mg/Kg	1	☼	8270D	Total/NA
Phenanthrene	0.016	J	0.038	0.0053	mg/Kg	1	☼	8270D	Total/NA
Pyrene	0.026	J	0.038	0.0075	mg/Kg	1	☼	8270D	Total/NA
Aluminum	13000		12	2.9	mg/Kg	1	☼	6010B	Total/NA
Arsenic	6.6		0.59	0.27	mg/Kg	1	☼	6010B	Total/NA
Barium	67		0.59	0.11	mg/Kg	1	☼	6010B	Total/NA
Beryllium	0.68		0.24	0.051	mg/Kg	1	☼	6010B	Total/NA
Boron	5.9		3.0	0.41	mg/Kg	1	☼	6010B	Total/NA
Cadmium	0.14		0.12	0.034	mg/Kg	1	☼	6010B	Total/NA
Calcium	11000		12	3.8	mg/Kg	1	☼	6010B	Total/NA
Chromium	18		0.59	0.10	mg/Kg	1	☼	6010B	Total/NA
Cobalt	11		0.30	0.067	mg/Kg	1	☼	6010B	Total/NA
Copper	14		0.59	0.13	mg/Kg	1	☼	6010B	Total/NA
Iron	19000		12	4.5	mg/Kg	1	☼	6010B	Total/NA
Lead	12		0.30	0.15	mg/Kg	1	☼	6010B	Total/NA
Magnesium	8300		5.9	2.4	mg/Kg	1	☼	6010B	Total/NA
Manganese	1000		0.59	0.12	mg/Kg	1	☼	6010B	Total/NA
Nickel	20		0.59	0.16	mg/Kg	1	☼	6010B	Total/NA
Potassium	1500		30	4.8	mg/Kg	1	☼	6010B	Total/NA
Sodium	320		59	7.8	mg/Kg	1	☼	6010B	Total/NA
Strontium	11		0.30	0.036	mg/Kg	1	☼	6010B	Total/NA
Vanadium	32		0.30	0.086	mg/Kg	1	☼	6010B	Total/NA
Zinc	32	B	1.2	0.37	mg/Kg	1	☼	6010B	Total/NA
Mercury	0.011	J	0.018	0.0062	mg/Kg	1	☼	7471B	Total/NA
pH	8.22		0.200	0.200	SU	1		9045D	Total/NA
Chloride	180		11	4.3	mg/Kg	5	☼	9056A	Total/NA
Fluoride	1.6	J	2.2	0.68	mg/Kg	1	☼	9056A	Total/NA
Nitrate as N	1.1	J	2.2	0.52	mg/Kg	1	☼	9056A	Total/NA
Sulfate	5.0		2.2	1.4	mg/Kg	1	☼	9056A	Total/NA
Phosphorus as P	290		69	10	mg/Kg	2	☼	SM 4500 P E	Total/NA

Client Sample ID: SB-5A 6-7' — Lab Sample ID: 500-100254-3

Analyte	Result	Qualifier	RL	MDL	Unit	Dil Fac	D	Method	Prep Type
Acetone	0.039		0.022	0.0043	mg/Kg	1	☼	8260B	Total/NA
2-Butanone (MEK)	0.0079		0.0055	0.0020	mg/Kg	1	☼	8260B	Total/NA
Benzo[a]anthracene	0.013	J	0.040	0.0054	mg/Kg	1	☼	8270D	Total/NA
Benzo[a]pyrene	0.016	J	0.040	0.0078	mg/Kg	1	☼	8270D	Total/NA
Benzo[b]fluoranthene	0.027	J	0.040	0.0087	mg/Kg	1	☼	8270D	Total/NA
Chrysene	0.020	J	0.040	0.011	mg/Kg	1	☼	8270D	Total/NA
Fluoranthene	0.032	J	0.040	0.0075	mg/Kg	1	☼	8270D	Total/NA
Phenanthrene	0.012	J	0.040	0.0056	mg/Kg	1	☼	8270D	Total/NA
Pyrene	0.030	J	0.040	0.0080	mg/Kg	1	☼	8270D	Total/NA
Aluminum	11000		12	2.9	mg/Kg	1	☼	6010B	Total/NA
Antimony	0.32	J	1.2	0.25	mg/Kg	1	☼	6010B	Total/NA
Arsenic	6.7		0.60	0.28	mg/Kg	1	☼	6010B	Total/NA
Barium	70		0.60	0.11	mg/Kg	1	☼	6010B	Total/NA

This Detection Summary does not include radiochemical test results.

Detection Summary

Client: Civil & Environmental Consultants Inc
Project/Site: CCDD - Yeoman Creek

TestAmerica Job ID: 500-100254-1

Client Sample ID: SB-5A 6-7' (Continued) — Lab Sample ID: 500-100254-3

Analyte	Result	Qualifier	RL	MDL	Unit	Dil Fac	D	Method	Prep Type
Beryllium	0.63		0.24	0.052	mg/Kg	1	☼	6010B	Total/NA
Boron	8.8		3.0	0.42	mg/Kg	1	☼	6010B	Total/NA
Cadmium	0.25		0.12	0.035	mg/Kg	1	☼	6010B	Total/NA
Calcium	21000		12	3.9	mg/Kg	1	☼	6010B	Total/NA
Chromium	19		0.60	0.10	mg/Kg	1	☼	6010B	Total/NA
Cobalt	9.3		0.30	0.068	mg/Kg	1	☼	6010B	Total/NA
Copper	19		0.60	0.13	mg/Kg	1	☼	6010B	Total/NA
Iron	18000		12	4.6	mg/Kg	1	☼	6010B	Total/NA
Lead	20		0.30	0.15	mg/Kg	1	☼	6010B	Total/NA
Magnesium	12000		6.0	2.4	mg/Kg	1	☼	6010B	Total/NA
Manganese	520		0.60	0.12	mg/Kg	1	☼	6010B	Total/NA
Nickel	19		0.60	0.16	mg/Kg	1	☼	6010B	Total/NA
Potassium	2100		30	4.9	mg/Kg	1	☼	6010B	Total/NA
Selenium	0.31	J B	0.60	0.30	mg/Kg	1	☼	6010B	Total/NA
Sodium	650		60	7.9	mg/Kg	1	☼	6010B	Total/NA
Strontium	19		0.30	0.037	mg/Kg	1	☼	6010B	Total/NA
Vanadium	26		0.30	0.087	mg/Kg	1	☼	6010B	Total/NA
Zinc	57	B	1.2	0.38	mg/Kg	1	☼	6010B	Total/NA
Mercury	0.038		0.019	0.0066	mg/Kg	1	☼	7471B	Total/NA
pH	7.62		0.200	0.200	SU	1		9045D	Total/NA
Chloride	610		24	9.0	mg/Kg	10	☼	9056A	Total/NA
Fluoride	2.2	J	2.4	0.73	mg/Kg	1	☼	9056A	Total/NA
Nitrate as N	1.4	J	2.4	0.55	mg/Kg	1	☼	9056A	Total/NA
Sulfate	750		24	15	mg/Kg	10	☼	9056A	Total/NA
Phosphorus as P	280		80	12	mg/Kg	2	☼	SM 4500 P E	Total/NA

Client Sample ID: SB-1A 6-7' — Lab Sample ID: 500-100254-4

Analyte	Result	Qualifier	RL	MDL	Unit	Dil Fac	D	Method	Prep Type
Benzo[a]anthracene	0.015	J	0.036	0.0049	mg/Kg	1	☼	8270D	Total/NA
Benzo[a]pyrene	0.016	J	0.036	0.0071	mg/Kg	1	☼	8270D	Total/NA
Benzo[b]fluoranthene	0.021	J	0.036	0.0079	mg/Kg	1	☼	8270D	Total/NA
Benzo[k]fluoranthene	0.014	J	0.036	0.011	mg/Kg	1	☼	8270D	Total/NA
Chrysene	0.028	J	0.036	0.010	mg/Kg	1	☼	8270D	Total/NA
Fluoranthene	0.035	J	0.036	0.0068	mg/Kg	1	☼	8270D	Total/NA
Phenanthrene	0.034	J	0.036	0.0051	mg/Kg	1	☼	8270D	Total/NA
Pyrene	0.036		0.036	0.0073	mg/Kg	1	☼	8270D	Total/NA
Aluminum	10000		11	2.8	mg/Kg	1	☼	6010B	Total/NA
Antimony	0.26	J	1.1	0.23	mg/Kg	1	☼	6010B	Total/NA
Arsenic	5.3		0.56	0.26	mg/Kg	1	☼	6010B	Total/NA
Barium	48		0.56	0.10	mg/Kg	1	☼	6010B	Total/NA
Beryllium	0.63		0.23	0.049	mg/Kg	1	☼	6010B	Total/NA
Boron	14		2.8	0.39	mg/Kg	1	☼	6010B	Total/NA
Cadmium	0.24		0.11	0.033	mg/Kg	1	☼	6010B	Total/NA
Calcium	73000		110	36	mg/Kg	10	☼	6010B	Total/NA
Chromium	18		0.56	0.097	mg/Kg	1	☼	6010B	Total/NA
Cobalt	8.3		0.28	0.064	mg/Kg	1	☼	6010B	Total/NA
Copper	19		0.56	0.12	mg/Kg	1	☼	6010B	Total/NA
Iron	17000		11	4.4	mg/Kg	1	☼	6010B	Total/NA
Lead	8.5		0.28	0.14	mg/Kg	1	☼	6010B	Total/NA

This Detection Summary does not include radiochemical test results.

Client Sample ID: SB-1A 6-7' (Continued) — Lab Sample ID: 500-100254-4

Analyte	Result	Qualifier	RL	MDL	Unit	Dil Fac	D	Method	Prep Type
Magnesium	33000		5.6	2.3	mg/Kg	1	☼	6010B	Total/NA
Manganese	440		0.56	0.11	mg/Kg	1	☼	6010B	Total/NA
Nickel	21		0.56	0.15	mg/Kg	1	☼	6010B	Total/NA
Potassium	3700		28	4.6	mg/Kg	1	☼	6010B	Total/NA
Sodium	270		56	7.5	mg/Kg	1	☼	6010B	Total/NA
Strontium	60		0.28	0.035	mg/Kg	1	☼	6010B	Total/NA
Vanadium	21		0.28	0.082	mg/Kg	1	☼	6010B	Total/NA
Zinc	39	B	1.1	0.36	mg/Kg	1	☼	6010B	Total/NA
pH	8.47		0.200	0.200	SU	1		9045D	Total/NA
Chloride	63		2.3	0.86	mg/Kg	1	☼	9056A	Total/NA
Fluoride	2.5		2.3	0.69	mg/Kg	1	☼	9056A	Total/NA
Nitrate as N	1.1	J	2.3	0.52	mg/Kg	1	☼	9056A	Total/NA
Sulfate	260		23	14	mg/Kg	10	☼	9056A	Total/NA
Phosphorus as P	260		72	11	mg/Kg	2	☼	SM 4500 P E	Total/NA

Client Sample ID: SB-2A 7-8' — Lab Sample ID: 500-100254-5

Analyte	Result	Qualifier	RL	MDL	Unit	Dil Fac	D	Method	Prep Type
Benzo[a]anthracene	0.0070	J	0.037	0.0050	mg/Kg	1	☼	8270D	Total/NA
Chrysene	0.018	J	0.037	0.010	mg/Kg	1	☼	8270D	Total/NA
Fluoranthene	0.014	J	0.037	0.0069	mg/Kg	1	☼	8270D	Total/NA
Phenanthrene	0.015	J	0.037	0.0052	mg/Kg	1	☼	8270D	Total/NA
Pyrene	0.017	J	0.037	0.0074	mg/Kg	1	☼	8270D	Total/NA
Aluminum	9200		11	2.7	mg/Kg	1	☼	6010B	Total/NA
Antimony	0.42	J	1.1	0.22	mg/Kg	1	☼	6010B	Total/NA
Arsenic	6.3		0.54	0.25	mg/Kg	1	☼	6010B	Total/NA
Barium	42		0.54	0.099	mg/Kg	1	☼	6010B	Total/NA
Beryllium	0.58		0.22	0.047	mg/Kg	1	☼	6010B	Total/NA
Boron	13		2.7	0.38	mg/Kg	1	☼	6010B	Total/NA
Cadmium	0.24		0.11	0.031	mg/Kg	1	☼	6010B	Total/NA
Calcium	76000		110	35	mg/Kg	10	☼	6010B	Total/NA
Chromium	16		0.54	0.093	mg/Kg	1	☼	6010B	Total/NA
Cobalt	8.9		0.27	0.061	mg/Kg	1	☼	6010B	Total/NA
Copper	19		0.54	0.12	mg/Kg	1	☼	6010B	Total/NA
Iron	16000		11	4.2	mg/Kg	1	☼	6010B	Total/NA
Lead	14		0.27	0.13	mg/Kg	1	☼	6010B	Total/NA
Magnesium	34000		5.4	2.2	mg/Kg	1	☼	6010B	Total/NA
Manganese	460		0.54	0.11	mg/Kg	1	☼	6010B	Total/NA
Nickel	22		0.54	0.15	mg/Kg	1	☼	6010B	Total/NA
Potassium	3400		27	4.4	mg/Kg	1	☼	6010B	Total/NA
Sodium	290		54	7.1	mg/Kg	1	☼	6010B	Total/NA
Strontium	54		0.27	0.033	mg/Kg	1	☼	6010B	Total/NA
Vanadium	19		0.27	0.079	mg/Kg	1	☼	6010B	Total/NA
Zinc	38	B	1.1	0.34	mg/Kg	1	☼	6010B	Total/NA
pH	8.49		0.200	0.200	SU	1		9045D	Total/NA
Chloride	30		2.2	0.83	mg/Kg	1	☼	9056A	Total/NA
Fluoride	2.5		2.2	0.67	mg/Kg	1	☼	9056A	Total/NA
Nitrate as N	1.4	J	2.2	0.50	mg/Kg	1	☼	9056A	Total/NA
Sulfate	330		11	6.9	mg/Kg	5	☼	9056A	Total/NA
Phosphorus as P	250		61	9.0	mg/Kg	2	☼	SM 4500 P E	Total/NA

This Detection Summary does not include radiochemical test results.

Method Summary

Client: Civil & Environmental Consultants Inc
Project/Site: CCDD - Yeoman Creek

TestAmerica Job ID: 500-100254-1

Method	Method Description	Protocol	Laboratory
8260B	Volatile Organic Compounds (GC/MS)	SW846	TAL CHI
8270D	Semivolatile Organic Compounds (GC/MS)	SW846	TAL CHI
8081B	Organochlorine Pesticides (GC)	SW846	TAL CHI
8082A	Polychlorinated Biphenyls (PCBs) by Gas Chromatography	SW846	TAL CHI
8151	Herbicides	SW846	TAL CHI
6010B	Total Metals	SW846	TAL CHI
7471B	Mercury (CVAA)	SW846	TAL CHI
7196A	Chromium, Hexavalent	SW846	TAL CHI
9014	Cyanide	SW846	TAL CHI
9045D	pH	SW846	TAL CHI
9056A	Anions, Ion Chromatography	SW846	TAL CHI
Moisture	Percent Moisture	EPA	TAL CHI
SM 4500 P E	Phosphorus	SM	TAL CHI

Protocol References:

EPA = US Environmental Protection Agency
SM = "Standard Methods For The Examination Of Water And Wastewater",
SW846 = "Test Methods For Evaluating Solid Waste, Physical/Chemical Methods", Third Edition, November 1986 And Its Updates.

Laboratory References:

TAL CHI = TestAmerica Chicago, 2417 Bond Street, University Park, IL 60484, TEL (708)534-5200

Sample Summary

Client: Civil & Environmental Consultants Inc
Project/Site: CCDD - Yeoman Creek

TestAmerica Job ID: 500-100254-1

Lab Sample ID	Client Sample ID	Matrix	Collected	Received
500-100254-1	SB-3A 7-8'	Solid	08/21/15 10:30	08/21/15 15:15
500-100254-2	SB-4A 6-7'	Solid	08/21/15 13:00	08/21/15 15:15
500-100254-3	SB-5A 6-7'	Solid	08/21/15 09:49	08/21/15 15:15
500-100254-4	SB-1A 6-7'	Solid	08/21/15 09:00	08/21/15 15:15
500-100254-5	SB-2A 7-8'	Solid	08/21/15 08:54	08/21/15 15:15

Client Sample Results

Client: Civil & Environmental Consultants Inc
Project/Site: CCDD - Yeoman Creek

TestAmerica Job ID: 500-100254-1

Client Sample ID: SB-3A 7-8'

Date Collected: 08/21/15 10:30
Date Received: 08/21/15 15:15

Lab Sample ID: 500-100254-1

Matrix: Solid
Percent Solids: 87.9

Method: 8260B - Volatile Organic Compounds (GC/MS)

Analyte	Result	Qualifier	RL	MDL	Unit	D	Prepared	Analyzed	Dil Fac
Acetone	0.0036	U	0.019	0.0036	mg/Kg	☼	08/21/15 16:10	08/27/15 06:40	1
Benzene	0.0010	U	0.0047	0.0010	mg/Kg	☼	08/21/15 16:10	08/27/15 06:40	1
Bromodichloromethane	0.00079	U	0.0047	0.00079	mg/Kg	☼	08/21/15 16:10	08/27/15 06:40	1
Bromoform	0.00096	U	0.0047	0.00096	mg/Kg	☼	08/21/15 16:10	08/27/15 06:40	1
Bromomethane	0.0017	U *	0.0047	0.0017	mg/Kg	☼	08/21/15 16:10	08/27/15 06:40	1
Carbon disulfide	0.0017	U	0.0047	0.0017	mg/Kg	☼	08/21/15 16:10	08/27/15 06:40	1
Carbon tetrachloride	0.0010	U	0.0047	0.0010	mg/Kg	☼	08/21/15 16:10	08/27/15 06:40	1
Chlorobenzene	0.0011	U	0.0047	0.0011	mg/Kg	☼	08/21/15 16:10	08/27/15 06:40	1
Chloroform	0.00092	U	0.0047	0.00092	mg/Kg	☼	08/21/15 16:10	08/27/15 06:40	1
cis-1,2-Dichloroethene	0.00096	U	0.0047	0.00096	mg/Kg	☼	08/21/15 16:10	08/27/15 06:40	1
Dibromochloromethane	0.00054	U	0.0047	0.00054	mg/Kg	☼	08/21/15 16:10	08/27/15 06:40	1
1,2-Dibromo-3-Chloropropane	0.0020	U	0.0047	0.0020	mg/Kg	☼	08/21/15 16:10	08/27/15 06:40	1
1,2-Dibromoethane	0.0012	U	0.0047	0.0012	mg/Kg	☼	08/21/15 16:10	08/27/15 06:40	1
1,1-Dichloroethane	0.00097	U	0.0047	0.00097	mg/Kg	☼	08/21/15 16:10	08/27/15 06:40	1
1,2-Dichloroethane	0.00070	U	0.0047	0.00070	mg/Kg	☼	08/21/15 16:10	08/27/15 06:40	1
1,1-Dichloroethene	0.0017	U	0.0047	0.0017	mg/Kg	☼	08/21/15 16:10	08/27/15 06:40	1
1,2-Dichloropropane	0.0012	U	0.0047	0.0012	mg/Kg	☼	08/21/15 16:10	08/27/15 06:40	1
1,3-Dichloropropene, Total	0.0013	U	0.0047	0.0013	mg/Kg	☼	08/21/15 16:10	08/27/15 06:40	1
Ethylbenzene	0.0012	U	0.0047	0.0012	mg/Kg	☼	08/21/15 16:10	08/27/15 06:40	1
Methylene Chloride	0.0035	U	0.0047	0.0035	mg/Kg	☼	08/21/15 16:10	08/27/15 06:40	1
Methyl tert-butyl ether	0.0011	U	0.0047	0.0011	mg/Kg	☼	08/21/15 16:10	08/27/15 06:40	1
m&p-Xylene	0.0017	U	0.0094	0.0017	mg/Kg	☼	08/21/15 16:10	08/27/15 06:40	1
n-Butyl alcohol	0.024	U	0.12	0.024	mg/Kg	☼	08/21/15 16:10	08/27/15 06:40	1
o-Xylene	0.0012	U	0.0047	0.0012	mg/Kg	☼	08/21/15 16:10	08/27/15 06:40	1
Styrene	0.0011	U	0.0047	0.0011	mg/Kg	☼	08/21/15 16:10	08/27/15 06:40	1
Tetrachloroethene	0.00098	U	0.0047	0.00098	mg/Kg	☼	08/21/15 16:10	08/27/15 06:40	1
Toluene	0.0016	U	0.0047	0.0016	mg/Kg	☼	08/21/15 16:10	08/27/15 06:40	1
2-Butanone (MEK)	0.0017	U	0.0047	0.0017	mg/Kg	☼	08/21/15 16:10	08/27/15 06:40	1
trans-1,2-Dichloroethene	0.0012	U	0.0047	0.0012	mg/Kg	☼	08/21/15 16:10	08/27/15 06:40	1
1,1,1-Trichloroethane	0.0011	U	0.0047	0.0011	mg/Kg	☼	08/21/15 16:10	08/27/15 06:40	1
1,1,2-Trichloroethane	0.00091	U	0.0047	0.00091	mg/Kg	☼	08/21/15 16:10	08/27/15 06:40	1
Trichloroethene	0.0013	U	0.0047	0.0013	mg/Kg	☼	08/21/15 16:10	08/27/15 06:40	1
Vinyl acetate	0.0013	U	0.0047	0.0013	mg/Kg	☼	08/21/15 16:10	08/27/15 06:40	1
Vinyl chloride	0.0011	U	0.0047	0.0011	mg/Kg	☼	08/21/15 16:10	08/27/15 06:40	1
Xylenes, Total	0.0017	U	0.0094	0.0017	mg/Kg	☼	08/21/15 16:10	08/27/15 06:40	1

Surrogate	*%Recovery*	*Qualifier*	*Limits*	*Prepared*	*Analyzed*	*Dil Fac*
4-Bromofluorobenzene (Surr)	*111*		*70 - 122*	*08/21/15 16:10*	*08/27/15 06:40*	*1*
Dibromofluoromethane	*102*		*75 - 120*	*08/21/15 16:10*	*08/27/15 06:40*	*1*
1,2-Dichloroethane-d4 (Surr)	*115*		*70 - 134*	*08/21/15 16:10*	*08/27/15 06:40*	*1*
Toluene-d8 (Surr)	*114*		*75 - 122*	*08/21/15 16:10*	*08/27/15 06:40*	*1*

Method: 8270D - Semivolatile Organic Compounds (GC/MS)

Analyte	Result	Qualifier	RL	MDL	Unit	D	Prepared	Analyzed	Dil Fac
Acenaphthene	**0.019**	**J**	0.037	0.0067	mg/Kg	☼	08/26/15 07:31	08/28/15 15:24	1
Acenaphthylene	**0.0061**	**J**	0.037	0.0049	mg/Kg	☼	08/26/15 07:31	08/28/15 15:24	1
Aldicarb	0.37	U	0.75	0.37	mg/Kg	☼	08/26/15 07:31	08/28/15 15:24	1
Anthracene	**0.048**		0.037	0.0062	mg/Kg	☼	08/26/15 07:31	08/28/15 15:24	1
Benzo[a]anthracene	**0.11**		0.037	0.0050	mg/Kg	☼	08/26/15 07:31	08/28/15 15:24	1
Benzo[a]pyrene	**0.094**		0.037	0.0072	mg/Kg	☼	08/26/15 07:31	08/28/15 15:24	1

Client Sample ID: SB-3A 7-8'

Date Collected: 08/21/15 10:30
Date Received: 08/21/15 15:15

Lab Sample ID: 500-100254-1
Matrix: Solid
Percent Solids: 87.9

Method: 8270D - Semivolatile Organic Compounds (GC/MS) (Continued)

Analyte	Result	Qualifier	RL	MDL	Unit	D	Prepared	Analyzed	Dil Fac
Benzo[b]fluoranthene	**0.14**		0.037	0.0080	mg/Kg	☼	08/26/15 07:31	08/28/15 15:24	1
Benzo[g,h,i]perylene	**0.049**		0.037	0.012	mg/Kg	☼	08/26/15 07:31	08/28/15 15:24	1
Benzoic acid	0.37	U	1.9	0.37	mg/Kg	☼	08/26/15 07:31	08/28/15 15:24	1
Benzo[k]fluoranthene	**0.049**		0.037	0.011	mg/Kg	☼	08/26/15 07:31	08/28/15 15:24	1
Bis(2-chloroethyl)ether	0.056	U	0.19	0.056	mg/Kg	☼	08/26/15 07:31	08/28/15 15:24	1
Bis(2-ethylhexyl) phthalate	0.068	U	0.19	0.068	mg/Kg	☼	08/26/15 07:31	08/28/15 15:24	1
Butyl benzyl phthalate	0.071	U	0.19	0.071	mg/Kg	☼	08/26/15 07:31	08/28/15 15:24	1
Carbazole	0.093	U	0.19	0.093	mg/Kg	☼	08/26/15 07:31	08/28/15 15:24	1
Carbofuran	0.086	U	0.75	0.086	mg/Kg	☼	08/26/15 07:31	08/28/15 15:24	1
4-Chloroaniline	0.17	U	0.75	0.17	mg/Kg	☼	08/26/15 07:31	08/28/15 15:24	1
2-Chlorophenol	0.063	U	0.19	0.063	mg/Kg	☼	08/26/15 07:31	08/28/15 15:24	1
Chrysene	**0.13**		0.037	0.010	mg/Kg	☼	08/26/15 07:31	08/28/15 15:24	1
Dibenz(a,h)anthracene	**0.021**	**J**	0.037	0.0072	mg/Kg	☼	08/26/15 07:31	08/28/15 15:24	1
1,2-Dichlorobenzene	0.044	U	0.19	0.044	mg/Kg	☼	08/26/15 07:31	08/28/15 15:24	1
1,4-Dichlorobenzene	0.048	U	0.19	0.048	mg/Kg	☼	08/26/15 07:31	08/28/15 15:24	1
3,3'-Dichlorobenzidine	0.052	U	0.19	0.052	mg/Kg	☼	08/26/15 07:31	08/28/15 15:24	1
2,4-Dichlorophenol	0.088	U	0.37	0.088	mg/Kg	☼	08/26/15 07:31	08/28/15 15:24	1
Diethyl phthalate	0.063	U	0.19	0.063	mg/Kg	☼	08/26/15 07:31	08/28/15 15:24	1
2,4-Dimethylphenol	0.14	U	0.37	0.14	mg/Kg	☼	08/26/15 07:31	08/28/15 15:24	1
Di-n-butyl phthalate	0.057	U	0.19	0.057	mg/Kg	☼	08/26/15 07:31	08/28/15 15:24	1
2,4-Dinitrophenol	0.65	U	0.75	0.65	mg/Kg	☼	08/26/15 07:31	08/28/15 15:24	1
2,4-Dinitrotoluene	0.059	U	0.19	0.059	mg/Kg	☼	08/26/15 07:31	08/28/15 15:24	1
2,6-Dinitrotoluene	0.073	U	0.19	0.073	mg/Kg	☼	08/26/15 07:31	08/28/15 15:24	1
Di-n-octyl phthalate	0.061	U	0.19	0.061	mg/Kg	☼	08/26/15 07:31	08/28/15 15:24	1
Fluoranthene	**0.32**		0.037	0.0069	mg/Kg	☼	08/26/15 07:31	08/28/15 15:24	1
Fluorene	**0.044**		0.037	0.0052	mg/Kg	☼	08/26/15 07:31	08/28/15 15:24	1
Hexachlorobenzene	0.0086	U	0.075	0.0086	mg/Kg	☼	08/26/15 07:31	08/28/15 15:24	1
Hexachlorocyclopentadiene	0.21	U	0.75	0.21	mg/Kg	☼	08/26/15 07:31	08/28/15 15:24	1
Hexachloroethane	0.056	U	0.19	0.056	mg/Kg	☼	08/26/15 07:31	08/28/15 15:24	1
Indeno[1,2,3-cd]pyrene	**0.063**		0.037	0.0096	mg/Kg	☼	08/26/15 07:31	08/28/15 15:24	1
Isophorone	0.042	U	0.19	0.042	mg/Kg	☼	08/26/15 07:31	08/28/15 15:24	1
2-Methylphenol	0.060	U	0.19	0.060	mg/Kg	☼	08/26/15 07:31	08/28/15 15:24	1
Naphthalene	**0.029**	**J**	0.037	0.0057	mg/Kg	☼	08/26/15 07:31	08/28/15 15:24	1
Nitrobenzene	0.0093	U	0.037	0.0093	mg/Kg	☼	08/26/15 07:31	08/28/15 15:24	1
4-Nitrophenol	0.35	U	0.75	0.35	mg/Kg	☼	08/26/15 07:31	08/28/15 15:24	1
N-Nitrosodi-n-propylamine	0.045	U	0.19	0.045	mg/Kg	☼	08/26/15 07:31	08/28/15 15:24	1
N-Nitrosodiphenylamine	0.044	U	0.19	0.044	mg/Kg	☼	08/26/15 07:31	08/28/15 15:24	1
Phenanthrene	**0.30**		0.037	0.0052	mg/Kg	☼	08/26/15 07:31	08/28/15 15:24	1
Phenol	0.082	U	0.19	0.082	mg/Kg	☼	08/26/15 07:31	08/28/15 15:24	1
Pyrene	**0.21**		0.037	0.0074	mg/Kg	☼	08/26/15 07:31	08/28/15 15:24	1
1,2,4-Trichlorobenzene	0.040	U	0.19	0.040	mg/Kg	☼	08/26/15 07:31	08/28/15 15:24	1
2,4,5-Trichlorophenol	0.085	U	0.37	0.085	mg/Kg	☼	08/26/15 07:31	08/28/15 15:24	1
2,4,6-Trichlorophenol	0.13	U	0.37	0.13	mg/Kg	☼	08/26/15 07:31	08/28/15 15:24	1

Surrogate	*%Recovery*	*Qualifier*	*Limits*	*Prepared*	*Analyzed*	*Dil Fac*
2-Fluorobiphenyl	*88*		*25 - 119*	*08/26/15 07:31*	*08/28/15 15:24*	*1*
2-Fluorophenol	*85*		*25 - 110*	*08/26/15 07:31*	*08/28/15 15:24*	*1*
Nitrobenzene-d5	*96*		*25 - 115*	*08/26/15 07:31*	*08/28/15 15:24*	*1*
Phenol-d5	*91*		*31 - 110*	*08/26/15 07:31*	*08/28/15 15:24*	*1*
Terphenyl-d14	*102*		*36 - 134*	*08/26/15 07:31*	*08/28/15 15:24*	*1*

Client Sample ID: SB-3A 7-8'

Date Collected: 08/21/15 10:30
Date Received: 08/21/15 15:15

Lab Sample ID: 500-100254-1

Matrix: Solid
Percent Solids: 87.9

Method: 8270D - Semivolatile Organic Compounds (GC/MS) (Continued)

Surrogate	%Recovery	Qualifier	Limits	Prepared	Analyzed	Dil Fac
2,4,6-Tribromophenol	90		35 - 137	08/26/15 07:31	08/28/15 15:24	1

Method: 8081B - Organochlorine Pesticides (GC)

Analyte	Result	Qualifier	RL	MDL	Unit	D	Prepared	Analyzed	Dil Fac
Alachlor	0.064	U	0.18	0.064	mg/Kg	☼	08/25/15 16:47	08/26/15 12:49	10
Aldrin	0.0075	U F1 F2	0.018	0.0075	mg/Kg	☼	08/25/15 16:47	08/26/15 12:49	10
alpha-BHC	0.0046	U	0.018	0.0046	mg/Kg	☼	08/25/15 16:47	08/26/15 12:49	10
Atrazine	0.38	U	1.8	0.38	mg/Kg	☼	08/25/15 16:47	08/26/15 12:49	10
Chlordane (technical)	0.035	U	0.072	0.035	mg/Kg	☼	08/25/15 16:47	08/26/15 12:49	10
4,4'-DDD	0.0036	U	0.018	0.0036	mg/Kg	☼	08/25/15 16:47	08/26/15 12:49	10
4,4'-DDE	0.0030	U F1 F2	0.018	0.0030	mg/Kg	☼	08/25/15 16:47	08/26/15 12:49	10
4,4'-DDT	0.0095	U * F1	0.018	0.0095	mg/Kg	☼	08/25/15 16:47	08/26/15 12:49	10
Dieldrin	0.0025	U F1 F2	0.018	0.0025	mg/Kg	☼	08/25/15 16:47	08/26/15 12:49	10
Endosulfan I	0.0079	U F1	0.018	0.0079	mg/Kg	☼	08/25/15 16:47	08/26/15 12:49	10
Endosulfan II	0.0029	U * F1	0.018	0.0029	mg/Kg	☼	08/25/15 16:47	08/26/15 12:49	10
Endrin	0.0025	U	0.018	0.0025	mg/Kg	☼	08/25/15 16:47	08/26/15 12:49	10
gamma-BHC (Lindane)	0.0039	U	0.018	0.0039	mg/Kg	☼	08/25/15 16:47	08/26/15 12:49	10
Heptachlor	0.0076	U F1	0.018	0.0076	mg/Kg	☼	08/25/15 16:47	08/26/15 12:49	10
Heptachlor epoxide	0.0064	U	0.018	0.0064	mg/Kg	☼	08/25/15 16:47	08/26/15 12:49	10
Methoxychlor	0.0035	U	0.089	0.0035	mg/Kg	☼	08/25/15 16:47	08/26/15 12:49	10
Simazine	0.14	U	0.72	0.14	mg/Kg	☼	08/25/15 16:47	08/26/15 12:49	10
Toxaphene	0.076	U	0.18	0.076	mg/Kg	☼	08/25/15 16:47	08/26/15 12:49	10

Surrogate	%Recovery	Qualifier	Limits	Prepared	Analyzed	Dil Fac
DCB Decachlorobiphenyl	99		56 - 128	08/25/15 16:47	08/26/15 12:49	10
Tetrachloro-m-xylene	84		45 - 112	08/25/15 16:47	08/26/15 12:49	10

Method: 8082A - Polychlorinated Biphenyls (PCBs) by Gas Chromatography

Analyte	Result	Qualifier	RL	MDL	Unit	D	Prepared	Analyzed	Dil Fac
PCB-1016	0.0064	U F1	0.018	0.0064	mg/Kg	☼	08/25/15 16:47	08/26/15 16:54	1
PCB-1221	0.0079	U	0.018	0.0079	mg/Kg	☼	08/25/15 16:47	08/26/15 16:54	1
PCB-1232	0.0078	U	0.018	0.0078	mg/Kg	☼	08/25/15 16:47	08/26/15 16:54	1
PCB-1242	0.0059	U	0.018	0.0059	mg/Kg	☼	08/25/15 16:47	08/26/15 16:54	1
PCB-1248	**0.16**		0.018	0.0071	mg/Kg	☼	08/25/15 16:47	08/26/15 16:54	1
PCB-1254	0.0039	U	0.018	0.0039	mg/Kg	☼	08/25/15 16:47	08/26/15 16:54	1
PCB-1260	0.0088	U	0.018	0.0088	mg/Kg	☼	08/25/15 16:47	08/26/15 16:54	1
Polychlorinated biphenyls, Total	**0.16**		0.018	0.0035	mg/Kg	☼	08/25/15 16:47	08/26/15 16:54	1

Surrogate	%Recovery	Qualifier	Limits	Prepared	Analyzed	Dil Fac
Tetrachloro-m-xylene	80		50 - 116	08/25/15 16:47	08/26/15 16:54	1
DCB Decachlorobiphenyl	95		48 - 142	08/25/15 16:47	08/26/15 16:54	1

Method: 8151 - Herbicides

Analyte	Result	Qualifier	RL	MDL	Unit	D	Prepared	Analyzed	Dil Fac
2,4-D	0.11	U	0.37	0.11	mg/Kg	☼	08/25/15 15:53	08/27/15 17:15	10
Dalapon	0.088	U	0.76	0.088	mg/Kg	☼	08/25/15 15:53	08/27/15 17:15	10
Dinoseb	0.19	U	0.76	0.19	mg/Kg	☼	08/25/15 15:53	08/27/15 17:15	10
Pentachlorophenol	0.069	U	0.19	0.069	mg/Kg	☼	08/25/15 15:53	08/27/15 17:15	10
Picloram	0.078	U	0.19	0.078	mg/Kg	☼	08/25/15 15:53	08/27/15 17:15	10
Silvex (2,4,5-TP)	0.096	U	0.37	0.096	mg/Kg	☼	08/25/15 15:53	08/27/15 17:15	10

Client Sample Results

Client: Civil & Environmental Consultants Inc
Project/Site: CCDD - Yeoman Creek

TestAmerica Job ID: 500-100254-1

Client Sample ID: SB-3A 7-8'

Date Collected: 08/21/15 10:30
Date Received: 08/21/15 15:15

Lab Sample ID: 500-100254-1

Matrix: Solid
Percent Solids: 87.9

Surrogate	*%Recovery*	*Qualifier*	*Limits*	*Prepared*	*Analyzed*	*Dil Fac*
DCAA	*40*		*32 - 122*	*08/25/15 15:53*	*08/27/15 17:15*	*10*

Method: 6010B - Total Metals

Analyte	Result	Qualifier	RL	MDL	Unit	D	Prepared	Analyzed	Dil Fac
Aluminum	**9100**		10	2.6	mg/Kg	☼	08/25/15 18:58	08/26/15 14:40	1
Antimony	**0.34**	**J F1**	1.0	0.22	mg/Kg	☼	08/25/15 18:58	08/26/15 14:40	1
Arsenic	**5.7**		0.52	0.24	mg/Kg	☼	08/25/15 18:58	08/26/15 14:40	1
Barium	**42**		0.52	0.096	mg/Kg	☼	08/25/15 18:58	08/26/15 14:40	1
Beryllium	**0.55**		0.21	0.045	mg/Kg	☼	08/25/15 18:58	08/26/15 14:40	1
Boron	**12**		2.6	0.37	mg/Kg	☼	08/25/15 18:58	08/26/15 14:40	1
Cadmium	**0.20**		0.10	0.030	mg/Kg	☼	08/25/15 18:58	08/26/15 14:40	1
Calcium	**42000**		52	17	mg/Kg	☼	08/25/15 18:58	08/27/15 14:05	5
Chromium	**16**		0.52	0.090	mg/Kg	☼	08/25/15 18:58	08/26/15 14:40	1
Cobalt	**7.9**		0.26	0.059	mg/Kg	☼	08/25/15 18:58	08/26/15 14:40	1
Copper	**19**		0.52	0.11	mg/Kg	☼	08/25/15 18:58	08/26/15 14:40	1
Iron	**16000**		10	4.0	mg/Kg	☼	08/25/15 18:58	08/26/15 14:40	1
Lead	**8.2**		0.26	0.13	mg/Kg	☼	08/25/15 18:58	08/26/15 14:40	1
Magnesium	**32000**		5.2	2.1	mg/Kg	☼	08/25/15 18:58	08/26/15 14:40	1
Manganese	**440**		0.52	0.10	mg/Kg	☼	08/25/15 18:58	08/26/15 14:40	1
Nickel	**19**		0.52	0.14	mg/Kg	☼	08/25/15 18:58	08/26/15 14:40	1
Potassium	**3200**		26	4.3	mg/Kg	☼	08/25/15 18:58	08/26/15 14:40	1
Selenium	0.26	U	0.52	0.26	mg/Kg	☼	08/25/15 18:58	08/26/15 14:40	1
Silver	0.061	U	0.26	0.061	mg/Kg	☼	08/25/15 18:58	08/26/15 14:40	1
Sodium	**230**	**F1**	52	6.9	mg/Kg	☼	08/25/15 18:58	08/26/15 14:40	1
Strontium	**54**		0.26	0.032	mg/Kg	☼	08/25/15 18:58	08/26/15 14:40	1
Thallium	0.26	U	0.52	0.26	mg/Kg	☼	08/25/15 18:58	08/27/15 13:32	1
Vanadium	**19**		0.26	0.077	mg/Kg	☼	08/25/15 18:58	08/26/15 14:40	1
Zinc	**37**	**B**	1.0	0.33	mg/Kg	☼	08/25/15 18:58	08/26/15 14:40	1

Method: 7471B - Mercury (CVAA)

Analyte	Result	Qualifier	RL	MDL	Unit	D	Prepared	Analyzed	Dil Fac
Mercury	**0.018**		0.018	0.0061	mg/Kg	☼	08/26/15 19:00	08/27/15 10:20	1

General Chemistry

Analyte	Result	Qualifier	RL	MDL	Unit	D	Prepared	Analyzed	Dil Fac
Chromium, hexavalent	0.51	U F1	1.1	0.51	mg/Kg	☼	08/26/15 15:35	08/27/15 14:18	1
Cyanide, Total	0.19	U	0.56	0.19	mg/Kg	☼	08/26/15 19:50	08/26/15 23:07	1
Cyanide, Amenable	0.19	U	0.56	0.19	mg/Kg	☼	08/26/15 19:50	08/26/15 23:07	1
pH	**8.31**		0.200	0.200	SU			08/25/15 14:36	1
Chloride	**8.5**		2.1	0.80	mg/Kg	☼	08/24/15 09:49	08/24/15 18:07	1
Fluoride	**1.0**	**J**	2.1	0.64	mg/Kg	☼	08/24/15 09:49	08/24/15 18:07	1
Nitrate as N	**0.92**	**J**	2.1	0.48	mg/Kg	☼	08/24/15 09:49	08/24/15 18:07	1
Sulfate	**460**		11	6.7	mg/Kg	☼	08/24/15 09:49	08/25/15 18:47	5
Phosphorus as P	**250**	**F1**	75	11	mg/Kg	☼	08/26/15 11:09	08/27/15 10:15	2

Client Sample Results

Client: Civil & Environmental Consultants Inc
Project/Site: CCDD - Yeoman Creek

TestAmerica Job ID: 500-100254-1

Client Sample ID: SB-4A 6-7'

Date Collected: 08/21/15 13:00
Date Received: 08/21/15 15:15

Lab Sample ID: 500-100254-2

Matrix: Solid
Percent Solids: 83.3

Method: 8260B - Volatile Organic Compounds (GC/MS)

Analyte	Result	Qualifier	RL	MDL	Unit	D	Prepared	Analyzed	Dil Fac
Acetone	0.0036	U	0.018	0.0036	mg/Kg	☼	08/21/15 16:10	08/27/15 07:08	1
Benzene	0.0010	U	0.0046	0.0010	mg/Kg	☼	08/21/15 16:10	08/27/15 07:08	1
Bromodichloromethane	0.00078	U	0.0046	0.00078	mg/Kg	☼	08/21/15 16:10	08/27/15 07:08	1
Bromoform	0.00094	U	0.0046	0.00094	mg/Kg	☼	08/21/15 16:10	08/27/15 07:08	1
Bromomethane	0.0017	U *	0.0046	0.0017	mg/Kg	☼	08/21/15 16:10	08/27/15 07:08	1
Carbon disulfide	0.0017	U	0.0046	0.0017	mg/Kg	☼	08/21/15 16:10	08/27/15 07:08	1
Carbon tetrachloride	0.00099	U	0.0046	0.00099	mg/Kg	☼	08/21/15 16:10	08/27/15 07:08	1
Chlorobenzene	0.0011	U	0.0046	0.0011	mg/Kg	☼	08/21/15 16:10	08/27/15 07:08	1
Chloroform	0.00090	U	0.0046	0.00090	mg/Kg	☼	08/21/15 16:10	08/27/15 07:08	1
cis-1,2-Dichloroethene	0.00094	U	0.0046	0.00094	mg/Kg	☼	08/21/15 16:10	08/27/15 07:08	1
Dibromochloromethane	0.00053	U	0.0046	0.00053	mg/Kg	☼	08/21/15 16:10	08/27/15 07:08	1
1,2-Dibromo-3-Chloropropane	0.0020	U	0.0046	0.0020	mg/Kg	☼	08/21/15 16:10	08/27/15 07:08	1
1,2-Dibromoethane	0.0012	U	0.0046	0.0012	mg/Kg	☼	08/21/15 16:10	08/27/15 07:08	1
1,1-Dichloroethane	0.00095	U	0.0046	0.00095	mg/Kg	☼	08/21/15 16:10	08/27/15 07:08	1
1,2-Dichloroethane	0.00069	U	0.0046	0.00069	mg/Kg	☼	08/21/15 16:10	08/27/15 07:08	1
1,1-Dichloroethene	0.0017	U	0.0046	0.0017	mg/Kg	☼	08/21/15 16:10	08/27/15 07:08	1
1,2-Dichloropropane	0.0012	U	0.0046	0.0012	mg/Kg	☼	08/21/15 16:10	08/27/15 07:08	1
1,3-Dichloropropene, Total	0.0013	U	0.0046	0.0013	mg/Kg	☼	08/21/15 16:10	08/27/15 07:08	1
Ethylbenzene	0.0011	U	0.0046	0.0011	mg/Kg	☼	08/21/15 16:10	08/27/15 07:08	1
Methylene Chloride	0.0035	U	0.0046	0.0035	mg/Kg	☼	08/21/15 16:10	08/27/15 07:08	1
Methyl tert-butyl ether	0.0011	U	0.0046	0.0011	mg/Kg	☼	08/21/15 16:10	08/27/15 07:08	1
m&p-Xylene	0.0017	U	0.0092	0.0017	mg/Kg	☼	08/21/15 16:10	08/27/15 07:08	1
n-Butyl alcohol	0.023	U	0.12	0.023	mg/Kg	☼	08/21/15 16:10	08/27/15 07:08	1
o-Xylene	0.0012	U	0.0046	0.0012	mg/Kg	☼	08/21/15 16:10	08/27/15 07:08	1
Styrene	0.0011	U	0.0046	0.0011	mg/Kg	☼	08/21/15 16:10	08/27/15 07:08	1
Tetrachloroethene	0.00096	U	0.0046	0.00096	mg/Kg	☼	08/21/15 16:10	08/27/15 07:08	1
Toluene	0.0016	U	0.0046	0.0016	mg/Kg	☼	08/21/15 16:10	08/27/15 07:08	1
2-Butanone (MEK)	0.0016	U	0.0046	0.0016	mg/Kg	☼	08/21/15 16:10	08/27/15 07:08	1
trans-1,2-Dichloroethene	0.0012	U	0.0046	0.0012	mg/Kg	☼	08/21/15 16:10	08/27/15 07:08	1
1,1,1-Trichloroethane	0.0011	U	0.0046	0.0011	mg/Kg	☼	08/21/15 16:10	08/27/15 07:08	1
1,1,2-Trichloroethane	0.00090	U	0.0046	0.00090	mg/Kg	☼	08/21/15 16:10	08/27/15 07:08	1
Trichloroethene	0.0012	U	0.0046	0.0012	mg/Kg	☼	08/21/15 16:10	08/27/15 07:08	1
Vinyl acetate	0.0012	U	0.0046	0.0012	mg/Kg	☼	08/21/15 16:10	08/27/15 07:08	1
Vinyl chloride	0.0011	U	0.0046	0.0011	mg/Kg	☼	08/21/15 16:10	08/27/15 07:08	1
Xylenes, Total	0.0017	U	0.0092	0.0017	mg/Kg	☼	08/21/15 16:10	08/27/15 07:08	1

Surrogate	*%Recovery*	*Qualifier*	*Limits*	*Prepared*	*Analyzed*	*Dil Fac*
4-Bromofluorobenzene (Surr)	*109*		*70 - 122*	*08/21/15 16:10*	*08/27/15 07:08*	*1*
Dibromofluoromethane	*105*		*75 - 120*	*08/21/15 16:10*	*08/27/15 07:08*	*1*
1,2-Dichloroethane-d4 (Surr)	*117*		*70 - 134*	*08/21/15 16:10*	*08/27/15 07:08*	*1*
Toluene-d8 (Surr)	*112*		*75 - 122*	*08/21/15 16:10*	*08/27/15 07:08*	*1*

Method: 8270D - Semivolatile Organic Compounds (GC/MS)

Analyte	Result	Qualifier	RL	MDL	Unit	D	Prepared	Analyzed	Dil Fac
Acenaphthene	0.0068	U	0.038	0.0068	mg/Kg	☼	08/26/15 07:31	08/28/15 15:53	1
Acenaphthylene	0.0050	U	0.038	0.0050	mg/Kg	☼	08/26/15 07:31	08/28/15 15:53	1
Aldicarb	0.38	U	0.77	0.38	mg/Kg	☼	08/26/15 07:31	08/28/15 15:53	1
Anthracene	0.0063	U	0.038	0.0063	mg/Kg	☼	08/26/15 07:31	08/28/15 15:53	1
Benzo[a]anthracene	**0.012**	**J**	0.038	0.0051	mg/Kg	☼	08/26/15 07:31	08/28/15 15:53	1
Benzo[a]pyrene	0.0073	U	0.038	0.0073	mg/Kg	☼	08/26/15 07:31	08/28/15 15:53	1

Client Sample ID: SB-4A 6-7'

Date Collected: 08/21/15 13:00
Date Received: 08/21/15 15:15

Lab Sample ID: 500-100254-2

Matrix: Solid
Percent Solids: 83.3

Method: 8270D - Semivolatile Organic Compounds (GC/MS) (Continued)

Analyte	Result	Qualifier	RL	MDL	Unit	D	Prepared	Analyzed	Dil Fac
Benzo[b]fluoranthene	**0.017**	**J**	0.038	0.0082	mg/Kg	☼	08/26/15 07:31	08/28/15 15:53	1
Benzo[g,h,i]perylene	0.012	U	0.038	0.012	mg/Kg	☼	08/26/15 07:31	08/28/15 15:53	1
Benzoic acid	0.38	U	1.9	0.38	mg/Kg	☼	08/26/15 07:31	08/28/15 15:53	1
Benzo[k]fluoranthene	0.011	U	0.038	0.011	mg/Kg	☼	08/26/15 07:31	08/28/15 15:53	1
Bis(2-chloroethyl)ether	0.057	U	0.19	0.057	mg/Kg	☼	08/26/15 07:31	08/28/15 15:53	1
Bis(2-ethylhexyl) phthalate	0.069	U	0.19	0.069	mg/Kg	☼	08/26/15 07:31	08/28/15 15:53	1
Butyl benzyl phthalate	0.072	U	0.19	0.072	mg/Kg	☼	08/26/15 07:31	08/28/15 15:53	1
Carbazole	0.095	U	0.19	0.095	mg/Kg	☼	08/26/15 07:31	08/28/15 15:53	1
Carbofuran	0.088	U	0.77	0.088	mg/Kg	☼	08/26/15 07:31	08/28/15 15:53	1
4-Chloroaniline	0.18	U	0.77	0.18	mg/Kg	☼	08/26/15 07:31	08/28/15 15:53	1
2-Chlorophenol	0.065	U	0.19	0.065	mg/Kg	☼	08/26/15 07:31	08/28/15 15:53	1
Chrysene	**0.015**	**J**	0.038	0.010	mg/Kg	☼	08/26/15 07:31	08/28/15 15:53	1
Dibenz(a,h)anthracene	0.0073	U	0.038	0.0073	mg/Kg	☼	08/26/15 07:31	08/28/15 15:53	1
1,2-Dichlorobenzene	0.045	U	0.19	0.045	mg/Kg	☼	08/26/15 07:31	08/28/15 15:53	1
1,4-Dichlorobenzene	0.049	U	0.19	0.049	mg/Kg	☼	08/26/15 07:31	08/28/15 15:53	1
3,3'-Dichlorobenzidine	0.053	U	0.19	0.053	mg/Kg	☼	08/26/15 07:31	08/28/15 15:53	1
2,4-Dichlorophenol	0.090	U	0.38	0.090	mg/Kg	☼	08/26/15 07:31	08/28/15 15:53	1
Diethyl phthalate	0.064	U	0.19	0.064	mg/Kg	☼	08/26/15 07:31	08/28/15 15:53	1
2,4-Dimethylphenol	0.14	U	0.38	0.14	mg/Kg	☼	08/26/15 07:31	08/28/15 15:53	1
Di-n-butyl phthalate	0.058	U	0.19	0.058	mg/Kg	☼	08/26/15 07:31	08/28/15 15:53	1
2,4-Dinitrophenol	0.67	U	0.77	0.67	mg/Kg	☼	08/26/15 07:31	08/28/15 15:53	1
2,4-Dinitrotoluene	0.060	U	0.19	0.060	mg/Kg	☼	08/26/15 07:31	08/28/15 15:53	1
2,6-Dinitrotoluene	0.075	U	0.19	0.075	mg/Kg	☼	08/26/15 07:31	08/28/15 15:53	1
Di-n-octyl phthalate	0.062	U	0.19	0.062	mg/Kg	☼	08/26/15 07:31	08/28/15 15:53	1
Fluoranthene	**0.032**	**J**	0.038	0.0070	mg/Kg	☼	08/26/15 07:31	08/28/15 15:53	1
Fluorene	0.0053	U	0.038	0.0053	mg/Kg	☼	08/26/15 07:31	08/28/15 15:53	1
Hexachlorobenzene	0.0088	U	0.077	0.0088	mg/Kg	☼	08/26/15 07:31	08/28/15 15:53	1
Hexachlorocyclopentadiene	0.22	U	0.77	0.22	mg/Kg	☼	08/26/15 07:31	08/28/15 15:53	1
Hexachloroethane	0.058	U	0.19	0.058	mg/Kg	☼	08/26/15 07:31	08/28/15 15:53	1
Indeno[1,2,3-cd]pyrene	0.0098	U	0.038	0.0098	mg/Kg	☼	08/26/15 07:31	08/28/15 15:53	1
Isophorone	0.043	U	0.19	0.043	mg/Kg	☼	08/26/15 07:31	08/28/15 15:53	1
2-Methylphenol	0.061	U	0.19	0.061	mg/Kg	☼	08/26/15 07:31	08/28/15 15:53	1
Naphthalene	0.0058	U	0.038	0.0058	mg/Kg	☼	08/26/15 07:31	08/28/15 15:53	1
Nitrobenzene	0.0095	U	0.038	0.0095	mg/Kg	☼	08/26/15 07:31	08/28/15 15:53	1
4-Nitrophenol	0.36	U	0.77	0.36	mg/Kg	☼	08/26/15 07:31	08/28/15 15:53	1
N-Nitrosodi-n-propylamine	0.046	U	0.19	0.046	mg/Kg	☼	08/26/15 07:31	08/28/15 15:53	1
N-Nitrosodiphenylamine	0.045	U	0.19	0.045	mg/Kg	☼	08/26/15 07:31	08/28/15 15:53	1
Phenanthrene	**0.016**	**J**	0.038	0.0053	mg/Kg	☼	08/26/15 07:31	08/28/15 15:53	1
Phenol	0.084	U	0.19	0.084	mg/Kg	☼	08/26/15 07:31	08/28/15 15:53	1
Pyrene	**0.026**	**J**	0.038	0.0075	mg/Kg	☼	08/26/15 07:31	08/28/15 15:53	1
1,2,4-Trichlorobenzene	0.041	U	0.19	0.041	mg/Kg	☼	08/26/15 07:31	08/28/15 15:53	1
2,4,5-Trichlorophenol	0.087	U	0.38	0.087	mg/Kg	☼	08/26/15 07:31	08/28/15 15:53	1
2,4,6-Trichlorophenol	0.13	U	0.38	0.13	mg/Kg	☼	08/26/15 07:31	08/28/15 15:53	1

Surrogate	*%Recovery*	*Qualifier*	*Limits*	*Prepared*	*Analyzed*	*Dil Fac*
2-Fluorobiphenyl	*85*		*25 - 119*	*08/26/15 07:31*	*08/28/15 15:53*	*1*
2-Fluorophenol	*83*		*25 - 110*	*08/26/15 07:31*	*08/28/15 15:53*	*1*
Nitrobenzene-d5	*92*		*25 - 115*	*08/26/15 07:31*	*08/28/15 15:53*	*1*
Phenol-d5	*86*		*31 - 110*	*08/26/15 07:31*	*08/28/15 15:53*	*1*
Terphenyl-d14	*94*		*36 - 134*	*08/26/15 07:31*	*08/28/15 15:53*	*1*

Client Sample ID: SB-4A 6-7'

Date Collected: 08/21/15 13:00
Date Received: 08/21/15 15:15

Lab Sample ID: 500-100254-2

Matrix: Solid
Percent Solids: 83.3

Method: 8270D - Semivolatile Organic Compounds (GC/MS) (Continued)

Surrogate	%Recovery	Qualifier	Limits	Prepared	Analyzed	Dil Fac
2,4,6-Tribromophenol	72		35 - 137	08/26/15 07:31	08/28/15 15:53	1

Method: 8081B - Organochlorine Pesticides (GC)

Analyte	Result	Qualifier	RL	MDL	Unit	D	Prepared	Analyzed	Dil Fac
Alachlor	0.14	U	0.40	0.14	mg/Kg	☼	08/25/15 16:47	08/27/15 10:53	20
Aldrin	0.016	U	0.040	0.016	mg/Kg	☼	08/25/15 16:47	08/27/15 10:53	20
alpha-BHC	0.010	U	0.040	0.010	mg/Kg	☼	08/25/15 16:47	08/27/15 10:53	20
Atrazine	0.83	U	3.9	0.83	mg/Kg	☼	08/25/15 16:47	08/27/15 10:53	20
Chlordane (technical)	0.077	U	0.16	0.077	mg/Kg	☼	08/25/15 16:47	08/27/15 10:53	20
4,4'-DDD	0.0079	U	0.040	0.0079	mg/Kg	☼	08/25/15 16:47	08/27/15 10:53	20
4,4'-DDE	0.0065	U	0.040	0.0065	mg/Kg	☼	08/25/15 16:47	08/27/15 10:53	20
4,4'-DDT	0.021	U *	0.040	0.021	mg/Kg	☼	08/25/15 16:47	08/27/15 10:53	20
Dieldrin	0.0054	U	0.040	0.0054	mg/Kg	☼	08/25/15 16:47	08/27/15 10:53	20
Endosulfan I	0.017	U	0.040	0.017	mg/Kg	☼	08/25/15 16:47	08/27/15 10:53	20
Endosulfan II	0.0064	U *	0.040	0.0064	mg/Kg	☼	08/25/15 16:47	08/27/15 10:53	20
Endrin	0.0055	U	0.040	0.0055	mg/Kg	☼	08/25/15 16:47	08/27/15 10:53	20
gamma-BHC (Lindane)	0.0085	U	0.040	0.0085	mg/Kg	☼	08/25/15 16:47	08/27/15 10:53	20
Heptachlor	0.017	U	0.040	0.017	mg/Kg	☼	08/25/15 16:47	08/27/15 10:53	20
Heptachlor epoxide	0.014	U	0.040	0.014	mg/Kg	☼	08/25/15 16:47	08/27/15 10:53	20
Methoxychlor	0.0076	U	0.20	0.0076	mg/Kg	☼	08/25/15 16:47	08/27/15 10:53	20
Simazine	0.31	U	1.6	0.31	mg/Kg	☼	08/25/15 16:47	08/27/15 10:53	20
Toxaphene	0.17	U	0.39	0.17	mg/Kg	☼	08/25/15 16:47	08/27/15 10:53	20

Surrogate	%Recovery	Qualifier	Limits	Prepared	Analyzed	Dil Fac
DCB Decachlorobiphenyl	0	D	56 - 128	08/25/15 16:47	08/27/15 10:53	20
Tetrachloro-m-xylene	0	D	45 - 112	08/25/15 16:47	08/27/15 10:53	20

Method: 8082A - Polychlorinated Biphenyls (PCBs) by Gas Chromatography

Analyte	Result	Qualifier	RL	MDL	Unit	D	Prepared	Analyzed	Dil Fac
PCB-1016	0.0070	U	0.020	0.0070	mg/Kg	☼	08/25/15 16:47	08/26/15 17:41	1
PCB-1221	0.0087	U	0.020	0.0087	mg/Kg	☼	08/25/15 16:47	08/26/15 17:41	1
PCB-1232	0.0086	U	0.020	0.0086	mg/Kg	☼	08/25/15 16:47	08/26/15 17:41	1
PCB-1242	0.0065	U	0.020	0.0065	mg/Kg	☼	08/25/15 16:47	08/26/15 17:41	1
PCB-1248	0.0078	U	0.020	0.0078	mg/Kg	☼	08/25/15 16:47	08/26/15 17:41	1
PCB-1254	0.0042	U	0.020	0.0042	mg/Kg	☼	08/25/15 16:47	08/26/15 17:41	1
PCB-1260	0.0097	U	0.020	0.0097	mg/Kg	☼	08/25/15 16:47	08/26/15 17:41	1
Polychlorinated biphenyls, Total	0.0038	U	0.020	0.0038	mg/Kg	☼	08/25/15 16:47	08/26/15 17:41	1

Surrogate	%Recovery	Qualifier	Limits	Prepared	Analyzed	Dil Fac
Tetrachloro-m-xylene	76		50 - 116	08/25/15 16:47	08/26/15 17:41	1
DCB Decachlorobiphenyl	101		48 - 142	08/25/15 16:47	08/26/15 17:41	1

Method: 8151 - Herbicides

Analyte	Result	Qualifier	RL	MDL	Unit	D	Prepared	Analyzed	Dil Fac
2,4-D	0.11	U	0.39	0.11	mg/Kg	☼	08/25/15 15:53	08/27/15 17:40	10
Dalapon	0.092	U	0.79	0.092	mg/Kg	☼	08/25/15 15:53	08/27/15 17:40	10
Dinoseb	0.20	U	0.79	0.20	mg/Kg	☼	08/25/15 15:53	08/27/15 17:40	10
Pentachlorophenol	0.072	U	0.20	0.072	mg/Kg	☼	08/25/15 15:53	08/27/15 17:40	10
Picloram	0.082	U	0.20	0.082	mg/Kg	☼	08/25/15 15:53	08/27/15 17:40	10
Silvex (2,4,5-TP)	0.10	U	0.39	0.10	mg/Kg	☼	08/25/15 15:53	08/27/15 17:40	10

Client Sample Results

Client: Civil & Environmental Consultants Inc
Project/Site: CCDD - Yeoman Creek

TestAmerica Job ID: 500-100254-1

Client Sample ID: SB-4A 6-7'

Date Collected: 08/21/15 13:00
Date Received: 08/21/15 15:15

Lab Sample ID: 500-100254-2

Matrix: Solid
Percent Solids: 83.3

Surrogate	*%Recovery*	*Qualifier*	*Limits*	*Prepared*	*Analyzed*	*Dil Fac*
DCAA	*55*		*32 - 122*	*08/25/15 15:53*	*08/27/15 17:40*	*10*

Method: 6010B - Total Metals

Analyte	Result	Qualifier	RL	MDL	Unit	D	Prepared	Analyzed	Dil Fac
Aluminum	**13000**		12	2.9	mg/Kg	☼	08/25/15 18:58	08/26/15 15:13	1
Antimony	0.24	U	1.2	0.24	mg/Kg	☼	08/25/15 18:58	08/26/15 15:13	1
Arsenic	**6.6**		0.59	0.27	mg/Kg	☼	08/25/15 18:58	08/26/15 15:13	1
Barium	**67**		0.59	0.11	mg/Kg	☼	08/25/15 18:58	08/26/15 15:13	1
Beryllium	**0.68**		0.24	0.051	mg/Kg	☼	08/25/15 18:58	08/26/15 15:13	1
Boron	**5.9**		3.0	0.41	mg/Kg	☼	08/25/15 18:58	08/26/15 15:13	1
Cadmium	**0.14**		0.12	0.034	mg/Kg	☼	08/25/15 18:58	08/26/15 15:13	1
Calcium	**11000**		12	3.8	mg/Kg	☼	08/25/15 18:58	08/26/15 15:13	1
Chromium	**18**		0.59	0.10	mg/Kg	☼	08/25/15 18:58	08/26/15 15:13	1
Cobalt	**11**		0.30	0.067	mg/Kg	☼	08/25/15 18:58	08/26/15 15:13	1
Copper	**14**		0.59	0.13	mg/Kg	☼	08/25/15 18:58	08/26/15 15:13	1
Iron	**19000**		12	4.5	mg/Kg	☼	08/25/15 18:58	08/26/15 15:13	1
Lead	**12**		0.30	0.15	mg/Kg	☼	08/25/15 18:58	08/26/15 15:13	1
Magnesium	**8300**		5.9	2.4	mg/Kg	☼	08/25/15 18:58	08/26/15 15:13	1
Manganese	**1000**		0.59	0.12	mg/Kg	☼	08/25/15 18:58	08/26/15 15:13	1
Nickel	**20**		0.59	0.16	mg/Kg	☼	08/25/15 18:58	08/26/15 15:13	1
Potassium	**1500**		30	4.8	mg/Kg	☼	08/25/15 18:58	08/26/15 15:13	1
Selenium	0.29	U	0.59	0.29	mg/Kg	☼	08/25/15 18:58	08/26/15 15:13	1
Silver	0.069	U	0.30	0.069	mg/Kg	☼	08/25/15 18:58	08/26/15 15:13	1
Sodium	**320**		59	7.8	mg/Kg	☼	08/25/15 18:58	08/26/15 15:13	1
Strontium	**11**		0.30	0.036	mg/Kg	☼	08/25/15 18:58	08/26/15 15:13	1
Thallium	0.29	U	0.59	0.29	mg/Kg	☼	08/25/15 18:58	08/27/15 14:25	1
Vanadium	**32**		0.30	0.086	mg/Kg	☼	08/25/15 18:58	08/26/15 15:13	1
Zinc	**32**	**B**	1.2	0.37	mg/Kg	☼	08/25/15 18:58	08/26/15 15:13	1

Method: 7471B - Mercury (CVAA)

Analyte	Result	Qualifier	RL	MDL	Unit	D	Prepared	Analyzed	Dil Fac
Mercury	**0.011**	**J**	0.018	0.0062	mg/Kg	☼	08/26/15 19:00	08/27/15 10:22	1

General Chemistry

Analyte	Result	Qualifier	RL	MDL	Unit	D	Prepared	Analyzed	Dil Fac
Chromium, hexavalent	0.54	U	1.2	0.54	mg/Kg	☼	08/26/15 15:35	08/27/15 14:22	1
Cyanide, Total	0.19	U	0.59	0.19	mg/Kg	☼	08/26/15 19:50	08/26/15 23:08	1
Cyanide, Amenable	0.19	U	0.59	0.19	mg/Kg	☼	08/26/15 19:50	08/26/15 23:08	1
pH	**8.22**		0.200	0.200	SU			08/25/15 14:39	1
Chloride	**180**		11	4.3	mg/Kg	☼	08/24/15 09:49	08/25/15 19:00	5
Fluoride	**1.6**	**J**	2.2	0.68	mg/Kg	☼	08/24/15 09:49	08/24/15 18:19	1
Nitrate as N	**1.1**	**J**	2.2	0.52	mg/Kg	☼	08/24/15 09:49	08/24/15 18:19	1
Sulfate	**5.0**		2.2	1.4	mg/Kg	☼	08/24/15 09:49	08/24/15 18:19	1
Phosphorus as P	**290**		69	10	mg/Kg	☼	08/26/15 11:09	08/27/15 10:16	2

Client Sample Results

Client: Civil & Environmental Consultants Inc
Project/Site: CCDD - Yeoman Creek

TestAmerica Job ID: 500-100254-1

Client Sample ID: SB-5A 6-7'

Date Collected: 08/21/15 09:49
Date Received: 08/21/15 15:15

Lab Sample ID: 500-100254-3

Matrix: Solid
Percent Solids: 80.5

Method: 8260B - Volatile Organic Compounds (GC/MS)

Analyte	Result	Qualifier	RL	MDL	Unit	D	Prepared	Analyzed	Dil Fac
Acetone	**0.039**		0.022	0.0043	mg/Kg	☼	08/21/15 16:10	08/27/15 07:36	1
Benzene	0.0012	U	0.0055	0.0012	mg/Kg	☼	08/21/15 16:10	08/27/15 07:36	1
Bromodichloromethane	0.00093	U	0.0055	0.00093	mg/Kg	☼	08/21/15 16:10	08/27/15 07:36	1
Bromoform	0.0011	U	0.0055	0.0011	mg/Kg	☼	08/21/15 16:10	08/27/15 07:36	1
Bromomethane	0.0020	U *	0.0055	0.0020	mg/Kg	☼	08/21/15 16:10	08/27/15 07:36	1
Carbon disulfide	0.0020	U	0.0055	0.0020	mg/Kg	☼	08/21/15 16:10	08/27/15 07:36	1
Carbon tetrachloride	0.0012	U	0.0055	0.0012	mg/Kg	☼	08/21/15 16:10	08/27/15 07:36	1
Chlorobenzene	0.0013	U	0.0055	0.0013	mg/Kg	☼	08/21/15 16:10	08/27/15 07:36	1
Chloroform	0.0011	U	0.0055	0.0011	mg/Kg	☼	08/21/15 16:10	08/27/15 07:36	1
cis-1,2-Dichloroethene	0.0011	U	0.0055	0.0011	mg/Kg	☼	08/21/15 16:10	08/27/15 07:36	1
Dibromochloromethane	0.00064	U	0.0055	0.00064	mg/Kg	☼	08/21/15 16:10	08/27/15 07:36	1
1,2-Dibromo-3-Chloropropane	0.0024	U	0.0055	0.0024	mg/Kg	☼	08/21/15 16:10	08/27/15 07:36	1
1,2-Dibromoethane	0.0014	U	0.0055	0.0014	mg/Kg	☼	08/21/15 16:10	08/27/15 07:36	1
1,1-Dichloroethane	0.0011	U	0.0055	0.0011	mg/Kg	☼	08/21/15 16:10	08/27/15 07:36	1
1,2-Dichloroethane	0.00082	U	0.0055	0.00082	mg/Kg	☼	08/21/15 16:10	08/27/15 07:36	1
1,1-Dichloroethene	0.0020	U	0.0055	0.0020	mg/Kg	☼	08/21/15 16:10	08/27/15 07:36	1
1,2-Dichloropropane	0.0014	U	0.0055	0.0014	mg/Kg	☼	08/21/15 16:10	08/27/15 07:36	1
1,3-Dichloropropene, Total	0.0016	U	0.0055	0.0016	mg/Kg	☼	08/21/15 16:10	08/27/15 07:36	1
Ethylbenzene	0.0014	U	0.0055	0.0014	mg/Kg	☼	08/21/15 16:10	08/27/15 07:36	1
Methylene Chloride	0.0042	U	0.0055	0.0042	mg/Kg	☼	08/21/15 16:10	08/27/15 07:36	1
Methyl tert-butyl ether	0.0013	U	0.0055	0.0013	mg/Kg	☼	08/21/15 16:10	08/27/15 07:36	1
m&p-Xylene	0.0020	U	0.011	0.0020	mg/Kg	☼	08/21/15 16:10	08/27/15 07:36	1
n-Butyl alcohol	0.028	U	0.14	0.028	mg/Kg	☼	08/21/15 16:10	08/27/15 07:36	1
o-Xylene	0.0014	U	0.0055	0.0014	mg/Kg	☼	08/21/15 16:10	08/27/15 07:36	1
Styrene	0.0013	U	0.0055	0.0013	mg/Kg	☼	08/21/15 16:10	08/27/15 07:36	1
Tetrachloroethene	0.0011	U	0.0055	0.0011	mg/Kg	☼	08/21/15 16:10	08/27/15 07:36	1
Toluene	0.0019	U	0.0055	0.0019	mg/Kg	☼	08/21/15 16:10	08/27/15 07:36	1
2-Butanone (MEK)	**0.0079**		0.0055	0.0020	mg/Kg	☼	08/21/15 16:10	08/27/15 07:36	1
trans-1,2-Dichloroethene	0.0014	U	0.0055	0.0014	mg/Kg	☼	08/21/15 16:10	08/27/15 07:36	1
1,1,1-Trichloroethane	0.0013	U	0.0055	0.0013	mg/Kg	☼	08/21/15 16:10	08/27/15 07:36	1
1,1,2-Trichloroethane	0.0011	U	0.0055	0.0011	mg/Kg	☼	08/21/15 16:10	08/27/15 07:36	1
Trichloroethene	0.0015	U	0.0055	0.0015	mg/Kg	☼	08/21/15 16:10	08/27/15 07:36	1
Vinyl acetate	0.0015	U	0.0055	0.0015	mg/Kg	☼	08/21/15 16:10	08/27/15 07:36	1
Vinyl chloride	0.0013	U	0.0055	0.0013	mg/Kg	☼	08/21/15 16:10	08/27/15 07:36	1
Xylenes, Total	0.0020	U	0.011	0.0020	mg/Kg	☼	08/21/15 16:10	08/27/15 07:36	1

Surrogate	*%Recovery*	*Qualifier*	*Limits*	*Prepared*	*Analyzed*	*Dil Fac*
4-Bromofluorobenzene (Surr)	*115*		*70 - 122*	*08/21/15 16:10*	*08/27/15 07:36*	*1*
Dibromofluoromethane	*110*		*75 - 120*	*08/21/15 16:10*	*08/27/15 07:36*	*1*
1,2-Dichloroethane-d4 (Surr)	*121*		*70 - 134*	*08/21/15 16:10*	*08/27/15 07:36*	*1*
Toluene-d8 (Surr)	*108*		*75 - 122*	*08/21/15 16:10*	*08/27/15 07:36*	*1*

Method: 8270D - Semivolatile Organic Compounds (GC/MS)

Analyte	Result	Qualifier	RL	MDL	Unit	D	Prepared	Analyzed	Dil Fac
Acenaphthene	0.0073	U	0.040	0.0073	mg/Kg	☼	08/26/15 07:31	08/28/15 16:22	1
Acenaphthylene	0.0053	U	0.040	0.0053	mg/Kg	☼	08/26/15 07:31	08/28/15 16:22	1
Aldicarb	0.40	U	0.81	0.40	mg/Kg	☼	08/26/15 07:31	08/28/15 16:22	1
Anthracene	0.0067	U	0.040	0.0067	mg/Kg	☼	08/26/15 07:31	08/28/15 16:22	1
Benzo[a]anthracene	**0.013**	**J**	0.040	0.0054	mg/Kg	☼	08/26/15 07:31	08/28/15 16:22	1
Benzo[a]pyrene	**0.016**	**J**	0.040	0.0078	mg/Kg	☼	08/26/15 07:31	08/28/15 16:22	1

Client Sample Results

Client: Civil & Environmental Consultants Inc
Project/Site: CCDD - Yeoman Creek

TestAmerica Job ID: 500-100254-1

Client Sample ID: SB-5A 6-7'

Date Collected: 08/21/15 09:49
Date Received: 08/21/15 15:15

Lab Sample ID: 500-100254-3

Matrix: Solid
Percent Solids: 80.5

Method: 8270D - Semivolatile Organic Compounds (GC/MS) (Continued)

Analyte	Result	Qualifier	RL	MDL	Unit	D	Prepared	Analyzed	Dil Fac
Benzo[b]fluoranthene	**0.027**	**J**	0.040	0.0087	mg/Kg	☼	08/26/15 07:31	08/28/15 16:22	1
Benzo[g,h,i]perylene	0.013	U	0.040	0.013	mg/Kg	☼	08/26/15 07:31	08/28/15 16:22	1
Benzoic acid	0.40	U	2.0	0.40	mg/Kg	☼	08/26/15 07:31	08/28/15 16:22	1
Benzo[k]fluoranthene	0.012	U	0.040	0.012	mg/Kg	☼	08/26/15 07:31	08/28/15 16:22	1
Bis(2-chloroethyl)ether	0.061	U	0.20	0.061	mg/Kg	☼	08/26/15 07:31	08/28/15 16:22	1
Bis(2-ethylhexyl) phthalate	0.074	U	0.20	0.074	mg/Kg	☼	08/26/15 07:31	08/28/15 16:22	1
Butyl benzyl phthalate	0.077	U	0.20	0.077	mg/Kg	☼	08/26/15 07:31	08/28/15 16:22	1
Carbazole	0.10	U	0.20	0.10	mg/Kg	☼	08/26/15 07:31	08/28/15 16:22	1
Carbofuran	0.093	U	0.81	0.093	mg/Kg	☼	08/26/15 07:31	08/28/15 16:22	1
4-Chloroaniline	0.19	U	0.81	0.19	mg/Kg	☼	08/26/15 07:31	08/28/15 16:22	1
2-Chlorophenol	0.069	U	0.20	0.069	mg/Kg	☼	08/26/15 07:31	08/28/15 16:22	1
Chrysene	**0.020**	**J**	0.040	0.011	mg/Kg	☼	08/26/15 07:31	08/28/15 16:22	1
Dibenz(a,h)anthracene	0.0078	U	0.040	0.0078	mg/Kg	☼	08/26/15 07:31	08/28/15 16:22	1
1,2-Dichlorobenzene	0.048	U	0.20	0.048	mg/Kg	☼	08/26/15 07:31	08/28/15 16:22	1
1,4-Dichlorobenzene	0.052	U	0.20	0.052	mg/Kg	☼	08/26/15 07:31	08/28/15 16:22	1
3,3'-Dichlorobenzidine	0.056	U	0.20	0.056	mg/Kg	☼	08/26/15 07:31	08/28/15 16:22	1
2,4-Dichlorophenol	0.096	U	0.40	0.096	mg/Kg	☼	08/26/15 07:31	08/28/15 16:22	1
Diethyl phthalate	0.068	U	0.20	0.068	mg/Kg	☼	08/26/15 07:31	08/28/15 16:22	1
2,4-Dimethylphenol	0.15	U	0.40	0.15	mg/Kg	☼	08/26/15 07:31	08/28/15 16:22	1
Di-n-butyl phthalate	0.061	U	0.20	0.061	mg/Kg	☼	08/26/15 07:31	08/28/15 16:22	1
2,4-Dinitrophenol	0.71	U	0.81	0.71	mg/Kg	☼	08/26/15 07:31	08/28/15 16:22	1
2,4-Dinitrotoluene	0.064	U	0.20	0.064	mg/Kg	☼	08/26/15 07:31	08/28/15 16:22	1
2,6-Dinitrotoluene	0.079	U	0.20	0.079	mg/Kg	☼	08/26/15 07:31	08/28/15 16:22	1
Di-n-octyl phthalate	0.066	U	0.20	0.066	mg/Kg	☼	08/26/15 07:31	08/28/15 16:22	1
Fluoranthene	**0.032**	**J**	0.040	0.0075	mg/Kg	☼	08/26/15 07:31	08/28/15 16:22	1
Fluorene	0.0057	U	0.040	0.0057	mg/Kg	☼	08/26/15 07:31	08/28/15 16:22	1
Hexachlorobenzene	0.0094	U	0.081	0.0094	mg/Kg	☼	08/26/15 07:31	08/28/15 16:22	1
Hexachlorocyclopentadiene	0.23	U	0.81	0.23	mg/Kg	☼	08/26/15 07:31	08/28/15 16:22	1
Hexachloroethane	0.061	U	0.20	0.061	mg/Kg	☼	08/26/15 07:31	08/28/15 16:22	1
Indeno[1,2,3-cd]pyrene	0.010	U	0.040	0.010	mg/Kg	☼	08/26/15 07:31	08/28/15 16:22	1
Isophorone	0.045	U	0.20	0.045	mg/Kg	☼	08/26/15 07:31	08/28/15 16:22	1
2-Methylphenol	0.065	U	0.20	0.065	mg/Kg	☼	08/26/15 07:31	08/28/15 16:22	1
Naphthalene	0.0062	U	0.040	0.0062	mg/Kg	☼	08/26/15 07:31	08/28/15 16:22	1
Nitrobenzene	0.010	U	0.040	0.010	mg/Kg	☼	08/26/15 07:31	08/28/15 16:22	1
4-Nitrophenol	0.38	U	0.81	0.38	mg/Kg	☼	08/26/15 07:31	08/28/15 16:22	1
N-Nitrosodi-n-propylamine	0.049	U	0.20	0.049	mg/Kg	☼	08/26/15 07:31	08/28/15 16:22	1
N-Nitrosodiphenylamine	0.048	U	0.20	0.048	mg/Kg	☼	08/26/15 07:31	08/28/15 16:22	1
Phenanthrene	**0.012**	**J**	0.040	0.0056	mg/Kg	☼	08/26/15 07:31	08/28/15 16:22	1
Phenol	0.090	U	0.20	0.090	mg/Kg	☼	08/26/15 07:31	08/28/15 16:22	1
Pyrene	**0.030**	**J**	0.040	0.0080	mg/Kg	☼	08/26/15 07:31	08/28/15 16:22	1
1,2,4-Trichlorobenzene	0.043	U	0.20	0.043	mg/Kg	☼	08/26/15 07:31	08/28/15 16:22	1
2,4,5-Trichlorophenol	0.092	U	0.40	0.092	mg/Kg	☼	08/26/15 07:31	08/28/15 16:22	1
2,4,6-Trichlorophenol	0.14	U	0.40	0.14	mg/Kg	☼	08/26/15 07:31	08/28/15 16:22	1

Surrogate	*%Recovery*	*Qualifier*	*Limits*	*Prepared*	*Analyzed*	*Dil Fac*
2-Fluorobiphenyl	*83*		*25 - 119*	*08/26/15 07:31*	*08/28/15 16:22*	*1*
2-Fluorophenol	*82*		*25 - 110*	*08/26/15 07:31*	*08/28/15 16:22*	*1*
Nitrobenzene-d5	*89*		*25 - 115*	*08/26/15 07:31*	*08/28/15 16:22*	*1*
Phenol-d5	*81*		*31 - 110*	*08/26/15 07:31*	*08/28/15 16:22*	*1*
Terphenyl-d14	*105*		*36 - 134*	*08/26/15 07:31*	*08/28/15 16:22*	*1*

Client Sample ID: SB-5A 6-7'

Date Collected: 08/21/15 09:49
Date Received: 08/21/15 15:15

Lab Sample ID: 500-100254-3

Matrix: Solid
Percent Solids: 80.5

Method: 8270D - Semivolatile Organic Compounds (GC/MS) (Continued)

Surrogate	%Recovery	Qualifier	Limits	Prepared	Analyzed	Dil Fac
2,4,6-Tribromophenol	102		35 - 137	08/26/15 07:31	08/28/15 16:22	1

Method: 8081B - Organochlorine Pesticides (GC)

Analyte	Result	Qualifier	RL	MDL	Unit	D	Prepared	Analyzed	Dil Fac
Alachlor	0.15	U	0.42	0.15	mg/Kg	☼	08/25/15 16:47	08/27/15 11:13	20
Aldrin	0.017	U	0.042	0.017	mg/Kg	☼	08/25/15 16:47	08/27/15 11:13	20
alpha-BHC	0.010	U	0.042	0.010	mg/Kg	☼	08/25/15 16:47	08/27/15 11:13	20
Atrazine	0.86	U	4.1	0.86	mg/Kg	☼	08/25/15 16:47	08/27/15 11:13	20
Chlordane (technical)	0.080	U	0.17	0.080	mg/Kg	☼	08/25/15 16:47	08/27/15 11:13	20
4,4'-DDD	0.0082	U	0.042	0.0082	mg/Kg	☼	08/25/15 16:47	08/27/15 11:13	20
4,4'-DDE	0.0068	U	0.042	0.0068	mg/Kg	☼	08/25/15 16:47	08/27/15 11:13	20
4,4'-DDT	0.022	U *	0.042	0.022	mg/Kg	☼	08/25/15 16:47	08/27/15 11:13	20
Dieldrin	0.0056	U	0.042	0.0056	mg/Kg	☼	08/25/15 16:47	08/27/15 11:13	20
Endosulfan I	0.018	U	0.042	0.018	mg/Kg	☼	08/25/15 16:47	08/27/15 11:13	20
Endosulfan II	0.0067	U *	0.042	0.0067	mg/Kg	☼	08/25/15 16:47	08/27/15 11:13	20
Endrin	0.0057	U	0.042	0.0057	mg/Kg	☼	08/25/15 16:47	08/27/15 11:13	20
gamma-BHC (Lindane)	0.0089	U	0.042	0.0089	mg/Kg	☼	08/25/15 16:47	08/27/15 11:13	20
Heptachlor	0.017	U	0.042	0.017	mg/Kg	☼	08/25/15 16:47	08/27/15 11:13	20
Heptachlor epoxide	0.015	U	0.042	0.015	mg/Kg	☼	08/25/15 16:47	08/27/15 11:13	20
Methoxychlor	0.0080	U	0.20	0.0080	mg/Kg	☼	08/25/15 16:47	08/27/15 11:13	20
Simazine	0.32	U	1.7	0.32	mg/Kg	☼	08/25/15 16:47	08/27/15 11:13	20
Toxaphene	0.17	U	0.41	0.17	mg/Kg	☼	08/25/15 16:47	08/27/15 11:13	20

Surrogate	%Recovery	Qualifier	Limits	Prepared	Analyzed	Dil Fac
DCB Decachlorobiphenyl	0	D	56 - 128	08/25/15 16:47	08/27/15 11:13	20
Tetrachloro-m-xylene	0	D	45 - 112	08/25/15 16:47	08/27/15 11:13	20

Method: 8082A - Polychlorinated Biphenyls (PCBs) by Gas Chromatography

Analyte	Result	Qualifier	RL	MDL	Unit	D	Prepared	Analyzed	Dil Fac
PCB-1016	0.0073	U	0.021	0.0073	mg/Kg	☼	08/25/15 16:47	08/26/15 17:57	1
PCB-1221	0.0090	U	0.021	0.0090	mg/Kg	☼	08/25/15 16:47	08/26/15 17:57	1
PCB-1232	0.0090	U	0.021	0.0090	mg/Kg	☼	08/25/15 16:47	08/26/15 17:57	1
PCB-1242	0.0068	U	0.021	0.0068	mg/Kg	☼	08/25/15 16:47	08/26/15 17:57	1
PCB-1248	0.0081	U	0.021	0.0081	mg/Kg	☼	08/25/15 16:47	08/26/15 17:57	1
PCB-1254	0.0044	U	0.021	0.0044	mg/Kg	☼	08/25/15 16:47	08/26/15 17:57	1
PCB-1260	0.010	U	0.021	0.010	mg/Kg	☼	08/25/15 16:47	08/26/15 17:57	1
Polychlorinated biphenyls, Total	0.0039	U	0.021	0.0039	mg/Kg	☼	08/25/15 16:47	08/26/15 17:57	1

Surrogate	%Recovery	Qualifier	Limits	Prepared	Analyzed	Dil Fac
Tetrachloro-m-xylene	78		50 - 116	08/25/15 16:47	08/26/15 17:57	1
DCB Decachlorobiphenyl	108		48 - 142	08/25/15 16:47	08/26/15 17:57	1

Method: 8151 - Herbicides

Analyte	Result	Qualifier	RL	MDL	Unit	D	Prepared	Analyzed	Dil Fac
2,4-D	0.12	U	0.41	0.12	mg/Kg	☼	08/25/15 15:53	08/27/15 18:05	10
Dalapon	0.096	U	0.83	0.096	mg/Kg	☼	08/25/15 15:53	08/27/15 18:05	10
Dinoseb	0.21	U F1	0.83	0.21	mg/Kg	☼	08/25/15 15:53	08/27/15 18:05	10
Pentachlorophenol	0.075	U	0.21	0.075	mg/Kg	☼	08/25/15 15:53	08/27/15 18:05	10
Picloram	0.085	U	0.21	0.085	mg/Kg	☼	08/25/15 15:53	08/27/15 18:05	10
Silvex (2,4,5-TP)	0.11	U	0.41	0.11	mg/Kg	☼	08/25/15 15:53	08/27/15 18:05	10

Client Sample Results

Client: Civil & Environmental Consultants Inc
Project/Site: CCDD - Yeoman Creek

TestAmerica Job ID: 500-100254-1

Client Sample ID: SB-5A 6-7'

Date Collected: 08/21/15 09:49
Date Received: 08/21/15 15:15

Lab Sample ID: 500-100254-3

Matrix: Solid
Percent Solids: 80.5

Surrogate	*%Recovery*	*Qualifier*	*Limits*	*Prepared*	*Analyzed*	*Dil Fac*
DCAA	*45*		*32 - 122*	*08/25/15 15:53*	*08/27/15 18:05*	*10*

Method: 6010B - Total Metals

Analyte	Result	Qualifier	RL	MDL	Unit	D	Prepared	Analyzed	Dil Fac
Aluminum	11000		12	2.9	mg/Kg	☼	08/25/15 18:58	08/26/15 15:20	1
Antimony	0.32	J	1.2	0.25	mg/Kg	☼	08/25/15 18:58	08/26/15 15:20	1
Arsenic	6.7		0.60	0.28	mg/Kg	☼	08/25/15 18:58	08/26/15 15:20	1
Barium	70		0.60	0.11	mg/Kg	☼	08/25/15 18:58	08/26/15 15:20	1
Beryllium	0.63		0.24	0.052	mg/Kg	☼	08/25/15 18:58	08/26/15 15:20	1
Boron	8.8		3.0	0.42	mg/Kg	☼	08/25/15 18:58	08/26/15 15:20	1
Cadmium	0.25		0.12	0.035	mg/Kg	☼	08/25/15 18:58	08/26/15 15:20	1
Calcium	21000		12	3.9	mg/Kg	☼	08/25/15 18:58	08/26/15 15:20	1
Chromium	19		0.60	0.10	mg/Kg	☼	08/25/15 18:58	08/26/15 15:20	1
Cobalt	9.3		0.30	0.068	mg/Kg	☼	08/25/15 18:58	08/26/15 15:20	1
Copper	19		0.60	0.13	mg/Kg	☼	08/25/15 18:58	08/26/15 15:20	1
Iron	18000		12	4.6	mg/Kg	☼	08/25/15 18:58	08/26/15 15:20	1
Lead	20		0.30	0.15	mg/Kg	☼	08/25/15 18:58	08/26/15 15:20	1
Magnesium	12000		6.0	2.4	mg/Kg	☼	08/25/15 18:58	08/26/15 15:20	1
Manganese	520		0.60	0.12	mg/Kg	☼	08/25/15 18:58	08/26/15 15:20	1
Nickel	19		0.60	0.16	mg/Kg	☼	08/25/15 18:58	08/26/15 15:20	1
Potassium	2100		30	4.9	mg/Kg	☼	08/25/15 18:58	08/26/15 15:20	1
Selenium	0.31	J B	0.60	0.30	mg/Kg	☼	08/25/15 18:58	08/26/15 15:20	1
Silver	0.070	U	0.30	0.070	mg/Kg	☼	08/25/15 18:58	08/26/15 15:20	1
Sodium	650		60	7.9	mg/Kg	☼	08/25/15 18:58	08/26/15 15:20	1
Strontium	19		0.30	0.037	mg/Kg	☼	08/25/15 18:58	08/26/15 15:20	1
Thallium	0.29	U	0.60	0.29	mg/Kg	☼	08/25/15 18:58	08/27/15 14:30	1
Vanadium	26		0.30	0.087	mg/Kg	☼	08/25/15 18:58	08/26/15 15:20	1
Zinc	57	B	1.2	0.38	mg/Kg	☼	08/25/15 18:58	08/26/15 15:20	1

Method: 7471B - Mercury (CVAA)

Analyte	Result	Qualifier	RL	MDL	Unit	D	Prepared	Analyzed	Dil Fac
Mercury	0.038		0.019	0.0066	mg/Kg	☼	08/26/15 19:00	08/27/15 10:24	1

General Chemistry

Analyte	Result	Qualifier	RL	MDL	Unit	D	Prepared	Analyzed	Dil Fac
Chromium, hexavalent	0.56	U	1.2	0.56	mg/Kg	☼	08/26/15 15:35	08/27/15 14:22	1
Cyanide, Total	0.20	U	0.61	0.20	mg/Kg	☼	08/26/15 19:50	08/26/15 23:08	1
Cyanide, Amenable	0.20	U	0.61	0.20	mg/Kg	☼	08/26/15 19:50	08/26/15 23:08	1
pH	7.62		0.200	0.200	SU			08/25/15 14:42	1
Chloride	610		24	9.0	mg/Kg	☼	08/24/15 09:49	08/25/15 19:13	10
Fluoride	2.2	J	2.4	0.73	mg/Kg	☼	08/24/15 09:49	08/24/15 18:32	1
Nitrate as N	1.4	J	2.4	0.55	mg/Kg	☼	08/24/15 09:49	08/24/15 18:32	1
Sulfate	750		24	15	mg/Kg	☼	08/24/15 09:49	08/25/15 19:13	10
Phosphorus as P	280		80	12	mg/Kg	☼	08/26/15 11:09	08/27/15 10:17	2

Client Sample Results

Client: Civil & Environmental Consultants Inc
Project/Site: CCDD - Yeoman Creek

TestAmerica Job ID: 500-100254-1

Client Sample ID: SB-1A 6-7'

Date Collected: 08/21/15 09:00
Date Received: 08/21/15 15:15

Lab Sample ID: 500-100254-4

Matrix: Solid
Percent Solids: 86.8

Method: 8260B - Volatile Organic Compounds (GC/MS)

Analyte	Result	Qualifier	RL	MDL	Unit	D	Prepared	Analyzed	Dil Fac
Acetone	0.0037	U	0.019	0.0037	mg/Kg	☼	08/21/15 16:10	08/27/15 10:30	1
Benzene	0.0011	U	0.0047	0.0011	mg/Kg	☼	08/21/15 16:10	08/27/15 10:30	1
Bromodichloromethane	0.00080	U	0.0047	0.00080	mg/Kg	☼	08/21/15 16:10	08/27/15 10:30	1
Bromoform	0.00097	U	0.0047	0.00097	mg/Kg	☼	08/21/15 16:10	08/27/15 10:30	1
Bromomethane	0.0017	U *	0.0047	0.0017	mg/Kg	☼	08/21/15 16:10	08/27/15 10:30	1
Carbon disulfide	0.0017	U	0.0047	0.0017	mg/Kg	☼	08/21/15 16:10	08/27/15 10:30	1
Carbon tetrachloride	0.0010	U	0.0047	0.0010	mg/Kg	☼	08/21/15 16:10	08/27/15 10:30	1
Chlorobenzene	0.0011	U	0.0047	0.0011	mg/Kg	☼	08/21/15 16:10	08/27/15 10:30	1
Chloroform	0.00093	U	0.0047	0.00093	mg/Kg	☼	08/21/15 16:10	08/27/15 10:30	1
cis-1,2-Dichloroethene	0.00097	U	0.0047	0.00097	mg/Kg	☼	08/21/15 16:10	08/27/15 10:30	1
Dibromochloromethane	0.00055	U	0.0047	0.00055	mg/Kg	☼	08/21/15 16:10	08/27/15 10:30	1
1,2-Dibromo-3-Chloropropane	0.0020	U	0.0047	0.0020	mg/Kg	☼	08/21/15 16:10	08/27/15 10:30	1
1,2-Dibromoethane	0.0012	U	0.0047	0.0012	mg/Kg	☼	08/21/15 16:10	08/27/15 10:30	1
1,1-Dichloroethane	0.00098	U	0.0047	0.00098	mg/Kg	☼	08/21/15 16:10	08/27/15 10:30	1
1,2-Dichloroethane	0.00070	U	0.0047	0.00070	mg/Kg	☼	08/21/15 16:10	08/27/15 10:30	1
1,1-Dichloroethene	0.0017	U	0.0047	0.0017	mg/Kg	☼	08/21/15 16:10	08/27/15 10:30	1
1,2-Dichloropropane	0.0012	U	0.0047	0.0012	mg/Kg	☼	08/21/15 16:10	08/27/15 10:30	1
1,3-Dichloropropene, Total	0.0013	U	0.0047	0.0013	mg/Kg	☼	08/21/15 16:10	08/27/15 10:30	1
Ethylbenzene	0.0012	U	0.0047	0.0012	mg/Kg	☼	08/21/15 16:10	08/27/15 10:30	1
Methylene Chloride	0.0036	U	0.0047	0.0036	mg/Kg	☼	08/21/15 16:10	08/27/15 10:30	1
Methyl tert-butyl ether	0.0011	U	0.0047	0.0011	mg/Kg	☼	08/21/15 16:10	08/27/15 10:30	1
m&p-Xylene	0.0018	U	0.0095	0.0018	mg/Kg	☼	08/21/15 16:10	08/27/15 10:30	1
n-Butyl alcohol	0.024	U	0.12	0.024	mg/Kg	☼	08/21/15 16:10	08/27/15 10:30	1
o-Xylene	0.0012	U	0.0047	0.0012	mg/Kg	☼	08/21/15 16:10	08/27/15 10:30	1
Styrene	0.0011	U	0.0047	0.0011	mg/Kg	☼	08/21/15 16:10	08/27/15 10:30	1
Tetrachloroethene	0.00099	U	0.0047	0.00099	mg/Kg	☼	08/21/15 16:10	08/27/15 10:30	1
Toluene	0.0017	U	0.0047	0.0017	mg/Kg	☼	08/21/15 16:10	08/27/15 10:30	1
2-Butanone (MEK)	0.0017	U	0.0047	0.0017	mg/Kg	☼	08/21/15 16:10	08/27/15 10:30	1
trans-1,2-Dichloroethene	0.0012	U	0.0047	0.0012	mg/Kg	☼	08/21/15 16:10	08/27/15 10:30	1
1,1,1-Trichloroethane	0.0011	U	0.0047	0.0011	mg/Kg	☼	08/21/15 16:10	08/27/15 10:30	1
1,1,2-Trichloroethane	0.00092	U	0.0047	0.00092	mg/Kg	☼	08/21/15 16:10	08/27/15 10:30	1
Trichloroethene	0.0013	U	0.0047	0.0013	mg/Kg	☼	08/21/15 16:10	08/27/15 10:30	1
Vinyl acetate	0.0013	U	0.0047	0.0013	mg/Kg	☼	08/21/15 16:10	08/27/15 10:30	1
Vinyl chloride	0.0011	U	0.0047	0.0011	mg/Kg	☼	08/21/15 16:10	08/27/15 10:30	1
Xylenes, Total	0.0018	U	0.0095	0.0018	mg/Kg	☼	08/21/15 16:10	08/27/15 10:30	1

Surrogate	*%Recovery*	*Qualifier*	*Limits*	*Prepared*	*Analyzed*	*Dil Fac*
4-Bromofluorobenzene (Surr)	*111*		*70 - 122*	*08/21/15 16:10*	*08/27/15 10:30*	*1*
Dibromofluoromethane	*101*		*75 - 120*	*08/21/15 16:10*	*08/27/15 10:30*	*1*
1,2-Dichloroethane-d4 (Surr)	*113*		*70 - 134*	*08/21/15 16:10*	*08/27/15 10:30*	*1*
Toluene-d8 (Surr)	*117*		*75 - 122*	*08/21/15 16:10*	*08/27/15 10:30*	*1*

Method: 8270D - Semivolatile Organic Compounds (GC/MS)

Analyte	Result	Qualifier	RL	MDL	Unit	D	Prepared	Analyzed	Dil Fac
Acenaphthene	0.0066	U	0.036	0.0066	mg/Kg	☼	08/26/15 07:31	08/28/15 16:52	1
Acenaphthylene	0.0048	U	0.036	0.0048	mg/Kg	☼	08/26/15 07:31	08/28/15 16:52	1
Aldicarb	0.36	U	0.74	0.36	mg/Kg	☼	08/26/15 07:31	08/28/15 16:52	1
Anthracene	0.0061	U	0.036	0.0061	mg/Kg	☼	08/26/15 07:31	08/28/15 16:52	1
Benzo[a]anthracene	**0.015**	**J**	0.036	0.0049	mg/Kg	☼	08/26/15 07:31	08/28/15 16:52	1
Benzo[a]pyrene	**0.016**	**J**	0.036	0.0071	mg/Kg	☼	08/26/15 07:31	08/28/15 16:52	1

Client Sample ID: SB-1A 6-7'

Date Collected: 08/21/15 09:00
Date Received: 08/21/15 15:15

Lab Sample ID: 500-100254-4

Matrix: Solid
Percent Solids: 86.8

Method: 8270D - Semivolatile Organic Compounds (GC/MS) (Continued)

Analyte	Result	Qualifier	RL	MDL	Unit	D	Prepared	Analyzed	Dil Fac
Benzo[b]fluoranthene	**0.021**	**J**	0.036	0.0079	mg/Kg	☼	08/26/15 07:31	08/28/15 16:52	1
Benzo[g,h,i]perylene	0.012	U	0.036	0.012	mg/Kg	☼	08/26/15 07:31	08/28/15 16:52	1
Benzoic acid	0.36	U	1.8	0.36	mg/Kg	☼	08/26/15 07:31	08/28/15 16:52	1
Benzo[k]fluoranthene	**0.014**	**J**	0.036	0.011	mg/Kg	☼	08/26/15 07:31	08/28/15 16:52	1
Bis(2-chloroethyl)ether	0.055	U	0.18	0.055	mg/Kg	☼	08/26/15 07:31	08/28/15 16:52	1
Bis(2-ethylhexyl) phthalate	0.067	U	0.18	0.067	mg/Kg	☼	08/26/15 07:31	08/28/15 16:52	1
Butyl benzyl phthalate	0.070	U	0.18	0.070	mg/Kg	☼	08/26/15 07:31	08/28/15 16:52	1
Carbazole	0.091	U	0.18	0.091	mg/Kg	☼	08/26/15 07:31	08/28/15 16:52	1
Carbofuran	0.084	U	0.74	0.084	mg/Kg	☼	08/26/15 07:31	08/28/15 16:52	1
4-Chloroaniline	0.17	U	0.74	0.17	mg/Kg	☼	08/26/15 07:31	08/28/15 16:52	1
2-Chlorophenol	0.062	U	0.18	0.062	mg/Kg	☼	08/26/15 07:31	08/28/15 16:52	1
Chrysene	**0.028**	**J**	0.036	0.010	mg/Kg	☼	08/26/15 07:31	08/28/15 16:52	1
Dibenz(a,h)anthracene	0.0071	U	0.036	0.0071	mg/Kg	☼	08/26/15 07:31	08/28/15 16:52	1
1,2-Dichlorobenzene	0.044	U	0.18	0.044	mg/Kg	☼	08/26/15 07:31	08/28/15 16:52	1
1,4-Dichlorobenzene	0.047	U	0.18	0.047	mg/Kg	☼	08/26/15 07:31	08/28/15 16:52	1
3,3'-Dichlorobenzidine	0.051	U	0.18	0.051	mg/Kg	☼	08/26/15 07:31	08/28/15 16:52	1
2,4-Dichlorophenol	0.087	U	0.36	0.087	mg/Kg	☼	08/26/15 07:31	08/28/15 16:52	1
Diethyl phthalate	0.062	U	0.18	0.062	mg/Kg	☼	08/26/15 07:31	08/28/15 16:52	1
2,4-Dimethylphenol	0.14	U	0.36	0.14	mg/Kg	☼	08/26/15 07:31	08/28/15 16:52	1
Di-n-butyl phthalate	0.056	U	0.18	0.056	mg/Kg	☼	08/26/15 07:31	08/28/15 16:52	1
2,4-Dinitrophenol	0.64	U	0.74	0.64	mg/Kg	☼	08/26/15 07:31	08/28/15 16:52	1
2,4-Dinitrotoluene	0.058	U	0.18	0.058	mg/Kg	☼	08/26/15 07:31	08/28/15 16:52	1
2,6-Dinitrotoluene	0.072	U	0.18	0.072	mg/Kg	☼	08/26/15 07:31	08/28/15 16:52	1
Di-n-octyl phthalate	0.060	U	0.18	0.060	mg/Kg	☼	08/26/15 07:31	08/28/15 16:52	1
Fluoranthene	**0.035**	**J**	0.036	0.0068	mg/Kg	☼	08/26/15 07:31	08/28/15 16:52	1
Fluorene	0.0051	U	0.036	0.0051	mg/Kg	☼	08/26/15 07:31	08/28/15 16:52	1
Hexachlorobenzene	0.0085	U	0.074	0.0085	mg/Kg	☼	08/26/15 07:31	08/28/15 16:52	1
Hexachlorocyclopentadiene	0.21	U	0.74	0.21	mg/Kg	☼	08/26/15 07:31	08/28/15 16:52	1
Hexachloroethane	0.056	U	0.18	0.056	mg/Kg	☼	08/26/15 07:31	08/28/15 16:52	1
Indeno[1,2,3-cd]pyrene	0.0095	U	0.036	0.0095	mg/Kg	☼	08/26/15 07:31	08/28/15 16:52	1
Isophorone	0.041	U	0.18	0.041	mg/Kg	☼	08/26/15 07:31	08/28/15 16:52	1
2-Methylphenol	0.059	U	0.18	0.059	mg/Kg	☼	08/26/15 07:31	08/28/15 16:52	1
Naphthalene	0.0056	U	0.036	0.0056	mg/Kg	☼	08/26/15 07:31	08/28/15 16:52	1
Nitrobenzene	0.0091	U	0.036	0.0091	mg/Kg	☼	08/26/15 07:31	08/28/15 16:52	1
4-Nitrophenol	0.35	U	0.74	0.35	mg/Kg	☼	08/26/15 07:31	08/28/15 16:52	1
N-Nitrosodi-n-propylamine	0.045	U	0.18	0.045	mg/Kg	☼	08/26/15 07:31	08/28/15 16:52	1
N-Nitrosodiphenylamine	0.043	U	0.18	0.043	mg/Kg	☼	08/26/15 07:31	08/28/15 16:52	1
Phenanthrene	**0.034**	**J**	0.036	0.0051	mg/Kg	☼	08/26/15 07:31	08/28/15 16:52	1
Phenol	0.081	U	0.18	0.081	mg/Kg	☼	08/26/15 07:31	08/28/15 16:52	1
Pyrene	**0.036**		0.036	0.0073	mg/Kg	☼	08/26/15 07:31	08/28/15 16:52	1
1,2,4-Trichlorobenzene	0.039	U	0.18	0.039	mg/Kg	☼	08/26/15 07:31	08/28/15 16:52	1
2,4,5-Trichlorophenol	0.083	U	0.36	0.083	mg/Kg	☼	08/26/15 07:31	08/28/15 16:52	1
2,4,6-Trichlorophenol	0.13	U	0.36	0.13	mg/Kg	☼	08/26/15 07:31	08/28/15 16:52	1

Surrogate	*%Recovery*	*Qualifier*	*Limits*	*Prepared*	*Analyzed*	*Dil Fac*
2-Fluorobiphenyl	*83*		*25 - 119*	*08/26/15 07:31*	*08/28/15 16:52*	*1*
2-Fluorophenol	*82*		*25 - 110*	*08/26/15 07:31*	*08/28/15 16:52*	*1*
Nitrobenzene-d5	*100*		*25 - 115*	*08/26/15 07:31*	*08/28/15 16:52*	*1*
Phenol-d5	*87*		*31 - 110*	*08/26/15 07:31*	*08/28/15 16:52*	*1*
Terphenyl-d14	*110*		*36 - 134*	*08/26/15 07:31*	*08/28/15 16:52*	*1*

Client Sample ID: SB-1A 6-7'

Date Collected: 08/21/15 09:00
Date Received: 08/21/15 15:15

Lab Sample ID: 500-100254-4

Matrix: Solid
Percent Solids: 86.8

Method: 8270D - Semivolatile Organic Compounds (GC/MS) (Continued)

Surrogate	%Recovery	Qualifier	Limits	Prepared	Analyzed	Dil Fac
2,4,6-Tribromophenol	88		35 - 137	08/26/15 07:31	08/28/15 16:52	1

Method: 8081B - Organochlorine Pesticides (GC)

Analyte	Result	Qualifier	RL	MDL	Unit	D	Prepared	Analyzed	Dil Fac
Alachlor	0.066	U	0.19	0.066	mg/Kg	☼	08/25/15 16:47	08/26/15 14:47	10
Aldrin	0.0077	U	0.019	0.0077	mg/Kg	☼	08/25/15 16:47	08/26/15 14:47	10
alpha-BHC	0.0047	U	0.019	0.0047	mg/Kg	☼	08/25/15 16:47	08/26/15 14:47	10
Atrazine	0.39	U	1.9	0.39	mg/Kg	☼	08/25/15 16:47	08/26/15 14:47	10
Chlordane (technical)	0.036	U	0.074	0.036	mg/Kg	☼	08/25/15 16:47	08/26/15 14:47	10
4,4'-DDD	0.0037	U	0.019	0.0037	mg/Kg	☼	08/25/15 16:47	08/26/15 14:47	10
4,4'-DDE	0.0031	U	0.019	0.0031	mg/Kg	☼	08/25/15 16:47	08/26/15 14:47	10
4,4'-DDT	0.0098	U *	0.019	0.0098	mg/Kg	☼	08/25/15 16:47	08/26/15 14:47	10
Dieldrin	0.0025	U	0.019	0.0025	mg/Kg	☼	08/25/15 16:47	08/26/15 14:47	10
Endosulfan I	0.0081	U	0.019	0.0081	mg/Kg	☼	08/25/15 16:47	08/26/15 14:47	10
Endosulfan II	0.0030	U *	0.019	0.0030	mg/Kg	☼	08/25/15 16:47	08/26/15 14:47	10
Endrin	0.0026	U	0.019	0.0026	mg/Kg	☼	08/25/15 16:47	08/26/15 14:47	10
gamma-BHC (Lindane)	0.0040	U	0.019	0.0040	mg/Kg	☼	08/25/15 16:47	08/26/15 14:47	10
Heptachlor	0.0078	U	0.019	0.0078	mg/Kg	☼	08/25/15 16:47	08/26/15 14:47	10
Heptachlor epoxide	0.0066	U	0.019	0.0066	mg/Kg	☼	08/25/15 16:47	08/26/15 14:47	10
Methoxychlor	0.0036	U	0.092	0.0036	mg/Kg	☼	08/25/15 16:47	08/26/15 14:47	10
Simazine	0.15	U	0.74	0.15	mg/Kg	☼	08/25/15 16:47	08/26/15 14:47	10
Toxaphene	0.078	U	0.19	0.078	mg/Kg	☼	08/25/15 16:47	08/26/15 14:47	10

Surrogate	%Recovery	Qualifier	Limits	Prepared	Analyzed	Dil Fac
DCB Decachlorobiphenyl	103		56 - 128	08/25/15 16:47	08/26/15 14:47	10
Tetrachloro-m-xylene	75		45 - 112	08/25/15 16:47	08/26/15 14:47	10

Method: 8082A - Polychlorinated Biphenyls (PCBs) by Gas Chromatography

Analyte	Result	Qualifier	RL	MDL	Unit	D	Prepared	Analyzed	Dil Fac
PCB-1016	0.0066	U	0.019	0.0066	mg/Kg	☼	08/25/15 16:47	08/26/15 12:14	1
PCB-1221	0.0082	U	0.019	0.0082	mg/Kg	☼	08/25/15 16:47	08/26/15 12:14	1
PCB-1232	0.0081	U	0.019	0.0081	mg/Kg	☼	08/25/15 16:47	08/26/15 12:14	1
PCB-1242	0.0061	U	0.019	0.0061	mg/Kg	☼	08/25/15 16:47	08/26/15 12:14	1
PCB-1248	0.0073	U	0.019	0.0073	mg/Kg	☼	08/25/15 16:47	08/26/15 12:14	1
PCB-1254	0.0040	U	0.019	0.0040	mg/Kg	☼	08/25/15 16:47	08/26/15 12:14	1
PCB-1260	0.0091	U	0.019	0.0091	mg/Kg	☼	08/25/15 16:47	08/26/15 12:14	1
Polychlorinated biphenyls, Total	0.0036	U	0.019	0.0036	mg/Kg	☼	08/25/15 16:47	08/26/15 12:14	1

Surrogate	%Recovery	Qualifier	Limits	Prepared	Analyzed	Dil Fac
Tetrachloro-m-xylene	69		50 - 116	08/25/15 16:47	08/26/15 12:14	1
DCB Decachlorobiphenyl	90		48 - 142	08/25/15 16:47	08/26/15 12:14	1

Method: 8151 - Herbicides

Analyte	Result	Qualifier	RL	MDL	Unit	D	Prepared	Analyzed	Dil Fac
2,4-D	0.11	U	0.38	0.11	mg/Kg	☼	08/25/15 15:53	08/27/15 19:18	10
Dalapon	0.088	U	0.76	0.088	mg/Kg	☼	08/25/15 15:53	08/27/15 19:18	10
Dinoseb	0.19	U	0.76	0.19	mg/Kg	☼	08/25/15 15:53	08/27/15 19:18	10
Pentachlorophenol	0.069	U	0.19	0.069	mg/Kg	☼	08/25/15 15:53	08/27/15 19:18	10
Picloram	0.079	U	0.19	0.079	mg/Kg	☼	08/25/15 15:53	08/27/15 19:18	10
Silvex (2,4,5-TP)	0.097	U	0.38	0.097	mg/Kg	☼	08/25/15 15:53	08/27/15 19:18	10

Client Sample Results

Client: Civil & Environmental Consultants Inc
Project/Site: CCDD - Yeoman Creek

TestAmerica Job ID: 500-100254-1

Client Sample ID: SB-1A 6-7'

Date Collected: 08/21/15 09:00
Date Received: 08/21/15 15:15

Lab Sample ID: 500-100254-4

Matrix: Solid
Percent Solids: 86.8

Surrogate	*%Recovery*	*Qualifier*	*Limits*	*Prepared*	*Analyzed*	*Dil Fac*
DCAA	*39*		*32 - 122*	*08/25/15 15:53*	*08/27/15 19:18*	*10*

Method: 6010B - Total Metals

Analyte	Result	Qualifier	RL	MDL	Unit	D	Prepared	Analyzed	Dil Fac
Aluminum	**10000**		11	2.8	mg/Kg	☼	08/25/15 18:58	08/26/15 15:43	1
Antimony	**0.26**	**J**	1.1	0.23	mg/Kg	☼	08/25/15 18:58	08/26/15 15:43	1
Arsenic	**5.3**		0.56	0.26	mg/Kg	☼	08/25/15 18:58	08/26/15 15:43	1
Barium	**48**		0.56	0.10	mg/Kg	☼	08/25/15 18:58	08/26/15 15:43	1
Beryllium	**0.63**		0.23	0.049	mg/Kg	☼	08/25/15 18:58	08/26/15 15:43	1
Boron	**14**		2.8	0.39	mg/Kg	☼	08/25/15 18:58	08/26/15 15:43	1
Cadmium	**0.24**		0.11	0.033	mg/Kg	☼	08/25/15 18:58	08/26/15 15:43	1
Calcium	**73000**		110	36	mg/Kg	☼	08/25/15 18:58	08/27/15 14:39	10
Chromium	**18**		0.56	0.097	mg/Kg	☼	08/25/15 18:58	08/26/15 15:43	1
Cobalt	**8.3**		0.28	0.064	mg/Kg	☼	08/25/15 18:58	08/26/15 15:43	1
Copper	**19**		0.56	0.12	mg/Kg	☼	08/25/15 18:58	08/26/15 15:43	1
Iron	**17000**		11	4.4	mg/Kg	☼	08/25/15 18:58	08/26/15 15:43	1
Lead	**8.5**		0.28	0.14	mg/Kg	☼	08/25/15 18:58	08/26/15 15:43	1
Magnesium	**33000**		5.6	2.3	mg/Kg	☼	08/25/15 18:58	08/26/15 15:43	1
Manganese	**440**		0.56	0.11	mg/Kg	☼	08/25/15 18:58	08/26/15 15:43	1
Nickel	**21**		0.56	0.15	mg/Kg	☼	08/25/15 18:58	08/26/15 15:43	1
Potassium	**3700**		28	4.6	mg/Kg	☼	08/25/15 18:58	08/26/15 15:43	1
Selenium	0.28	U	0.56	0.28	mg/Kg	☼	08/25/15 18:58	08/26/15 15:43	1
Silver	0.066	U	0.28	0.066	mg/Kg	☼	08/25/15 18:58	08/26/15 15:43	1
Sodium	**270**		56	7.5	mg/Kg	☼	08/25/15 18:58	08/26/15 15:43	1
Strontium	**60**		0.28	0.035	mg/Kg	☼	08/25/15 18:58	08/26/15 15:43	1
Thallium	0.28	U	0.56	0.28	mg/Kg	☼	08/25/15 18:58	08/27/15 14:34	1
Vanadium	**21**		0.28	0.082	mg/Kg	☼	08/25/15 18:58	08/26/15 15:43	1
Zinc	**39**	**B**	1.1	0.36	mg/Kg	☼	08/25/15 18:58	08/26/15 15:43	1

Method: 7471B - Mercury (CVAA)

Analyte	Result	Qualifier	RL	MDL	Unit	D	Prepared	Analyzed	Dil Fac
Mercury	0.0060	U	0.017	0.0060	mg/Kg	☼	08/26/15 19:00	08/27/15 10:26	1

General Chemistry

Analyte	Result	Qualifier	RL	MDL	Unit	D	Prepared	Analyzed	Dil Fac
Chromium, hexavalent	0.51	U	1.1	0.51	mg/Kg	☼	08/26/15 15:35	08/27/15 14:23	1
Cyanide, Total	0.17	U	0.53	0.17	mg/Kg	☼	08/26/15 19:50	08/26/15 23:09	1
Cyanide, Amenable	0.17	U	0.53	0.17	mg/Kg	☼	08/26/15 19:50	08/26/15 23:09	1
pH	**8.47**		0.200	0.200	SU			08/25/15 14:45	1
Chloride	**63**		2.3	0.86	mg/Kg	☼	08/24/15 09:49	08/24/15 18:45	1
Fluoride	**2.5**		2.3	0.69	mg/Kg	☼	08/24/15 09:49	08/24/15 18:45	1
Nitrate as N	**1.1**	**J**	2.3	0.52	mg/Kg	☼	08/24/15 09:49	08/24/15 18:45	1
Sulfate	**260**		23	14	mg/Kg	☼	08/24/15 09:49	08/25/15 19:25	10
Phosphorus as P	**260**		72	11	mg/Kg	☼	08/26/15 11:09	08/27/15 10:17	2

Client Sample Results

Client: Civil & Environmental Consultants Inc
Project/Site: CCDD - Yeoman Creek

TestAmerica Job ID: 500-100254-1

Client Sample ID: SB-2A 7-8'

Date Collected: 08/21/15 08:54
Date Received: 08/21/15 15:15

Lab Sample ID: 500-100254-5

Matrix: Solid
Percent Solids: 88.3

Method: 8260B - Volatile Organic Compounds (GC/MS)

Analyte	Result	Qualifier	RL	MDL	Unit	D	Prepared	Analyzed	Dil Fac
Acetone	0.0037	U	0.019	0.0037	mg/Kg	☼	08/21/15 16:10	08/27/15 10:56	1
Benzene	0.0011	U	0.0048	0.0011	mg/Kg	☼	08/21/15 16:10	08/27/15 10:56	1
Bromodichloromethane	0.00081	U	0.0048	0.00081	mg/Kg	☼	08/21/15 16:10	08/27/15 10:56	1
Bromoform	0.00098	U	0.0048	0.00098	mg/Kg	☼	08/21/15 16:10	08/27/15 10:56	1
Bromomethane	0.0018	U *	0.0048	0.0018	mg/Kg	☼	08/21/15 16:10	08/27/15 10:56	1
Carbon disulfide	0.0018	U	0.0048	0.0018	mg/Kg	☼	08/21/15 16:10	08/27/15 10:56	1
Carbon tetrachloride	0.0010	U	0.0048	0.0010	mg/Kg	☼	08/21/15 16:10	08/27/15 10:56	1
Chlorobenzene	0.0011	U	0.0048	0.0011	mg/Kg	☼	08/21/15 16:10	08/27/15 10:56	1
Chloroform	0.00094	U	0.0048	0.00094	mg/Kg	☼	08/21/15 16:10	08/27/15 10:56	1
cis-1,2-Dichloroethene	0.00098	U	0.0048	0.00098	mg/Kg	☼	08/21/15 16:10	08/27/15 10:56	1
Dibromochloromethane	0.00055	U	0.0048	0.00055	mg/Kg	☼	08/21/15 16:10	08/27/15 10:56	1
1,2-Dibromo-3-Chloropropane	0.0021	U	0.0048	0.0021	mg/Kg	☼	08/21/15 16:10	08/27/15 10:56	1
1,2-Dibromoethane	0.0012	U	0.0048	0.0012	mg/Kg	☼	08/21/15 16:10	08/27/15 10:56	1
1,1-Dichloroethane	0.00099	U	0.0048	0.00099	mg/Kg	☼	08/21/15 16:10	08/27/15 10:56	1
1,2-Dichloroethane	0.00071	U	0.0048	0.00071	mg/Kg	☼	08/21/15 16:10	08/27/15 10:56	1
1,1-Dichloroethene	0.0018	U	0.0048	0.0018	mg/Kg	☼	08/21/15 16:10	08/27/15 10:56	1
1,2-Dichloropropane	0.0013	U	0.0048	0.0013	mg/Kg	☼	08/21/15 16:10	08/27/15 10:56	1
1,3-Dichloropropene, Total	0.0014	U	0.0048	0.0014	mg/Kg	☼	08/21/15 16:10	08/27/15 10:56	1
Ethylbenzene	0.0012	U	0.0048	0.0012	mg/Kg	☼	08/21/15 16:10	08/27/15 10:56	1
Methylene Chloride	0.0036	U	0.0048	0.0036	mg/Kg	☼	08/21/15 16:10	08/27/15 10:56	1
Methyl tert-butyl ether	0.0011	U	0.0048	0.0011	mg/Kg	☼	08/21/15 16:10	08/27/15 10:56	1
m&p-Xylene	0.0018	U	0.0096	0.0018	mg/Kg	☼	08/21/15 16:10	08/27/15 10:56	1
n-Butyl alcohol	0.024	U	0.12	0.024	mg/Kg	☼	08/21/15 16:10	08/27/15 10:56	1
o-Xylene	0.0012	U	0.0048	0.0012	mg/Kg	☼	08/21/15 16:10	08/27/15 10:56	1
Styrene	0.0011	U	0.0048	0.0011	mg/Kg	☼	08/21/15 16:10	08/27/15 10:56	1
Tetrachloroethene	0.0010	U	0.0048	0.0010	mg/Kg	☼	08/21/15 16:10	08/27/15 10:56	1
Toluene	0.0017	U	0.0048	0.0017	mg/Kg	☼	08/21/15 16:10	08/27/15 10:56	1
2-Butanone (MEK)	0.0017	U	0.0048	0.0017	mg/Kg	☼	08/21/15 16:10	08/27/15 10:56	1
trans-1,2-Dichloroethene	0.0012	U	0.0048	0.0012	mg/Kg	☼	08/21/15 16:10	08/27/15 10:56	1
1,1,1-Trichloroethane	0.0011	U	0.0048	0.0011	mg/Kg	☼	08/21/15 16:10	08/27/15 10:56	1
1,1,2-Trichloroethane	0.00093	U	0.0048	0.00093	mg/Kg	☼	08/21/15 16:10	08/27/15 10:56	1
Trichloroethene	0.0013	U	0.0048	0.0013	mg/Kg	☼	08/21/15 16:10	08/27/15 10:56	1
Vinyl acetate	0.0013	U	0.0048	0.0013	mg/Kg	☼	08/21/15 16:10	08/27/15 10:56	1
Vinyl chloride	0.0011	U	0.0048	0.0011	mg/Kg	☼	08/21/15 16:10	08/27/15 10:56	1
Xylenes, Total	0.0018	U	0.0096	0.0018	mg/Kg	☼	08/21/15 16:10	08/27/15 10:56	1

Surrogate	*%Recovery*	*Qualifier*	*Limits*	*Prepared*	*Analyzed*	*Dil Fac*
4-Bromofluorobenzene (Surr)	*110*		*70 - 122*	*08/21/15 16:10*	*08/27/15 10:56*	*1*
Dibromofluoromethane	*104*		*75 - 120*	*08/21/15 16:10*	*08/27/15 10:56*	*1*
1,2-Dichloroethane-d4 (Surr)	*114*		*70 - 134*	*08/21/15 16:10*	*08/27/15 10:56*	*1*
Toluene-d8 (Surr)	*116*		*75 - 122*	*08/21/15 16:10*	*08/27/15 10:56*	*1*

Method: 8270D - Semivolatile Organic Compounds (GC/MS)

Analyte	Result	Qualifier	RL	MDL	Unit	D	Prepared	Analyzed	Dil Fac
Acenaphthene	0.0067	U	0.037	0.0067	mg/Kg	☼	08/26/15 07:31	08/28/15 16:35	1
Acenaphthylene	0.0049	U	0.037	0.0049	mg/Kg	☼	08/26/15 07:31	08/28/15 16:35	1
Aldicarb	0.37	U	0.75	0.37	mg/Kg	☼	08/26/15 07:31	08/28/15 16:35	1
Anthracene	0.0062	U	0.037	0.0062	mg/Kg	☼	08/26/15 07:31	08/28/15 16:35	1
Benzo[a]anthracene	**0.0070**	**J**	0.037	0.0050	mg/Kg	☼	08/26/15 07:31	08/28/15 16:35	1
Benzo[a]pyrene	0.0072	U	0.037	0.0072	mg/Kg	☼	08/26/15 07:31	08/28/15 16:35	1

Client Sample ID: SB-2A 7-8'

Date Collected: 08/21/15 08:54
Date Received: 08/21/15 15:15

Lab Sample ID: 500-100254-5
Matrix: Solid
Percent Solids: 88.3

Method: 8270D - Semivolatile Organic Compounds (GC/MS) (Continued)

Analyte	Result	Qualifier	RL	MDL	Unit	D	Prepared	Analyzed	Dil Fac
Benzo[b]fluoranthene	0.0080	U	0.037	0.0080	mg/Kg	☼	08/26/15 07:31	08/28/15 16:35	1
Benzo[g,h,i]perylene	0.012	U	0.037	0.012	mg/Kg	☼	08/26/15 07:31	08/28/15 16:35	1
Benzoic acid	0.37	U	1.9	0.37	mg/Kg	☼	08/26/15 07:31	08/28/15 16:35	1
Benzo[k]fluoranthene	0.011	U	0.037	0.011	mg/Kg	☼	08/26/15 07:31	08/28/15 16:35	1
Bis(2-chloroethyl)ether	0.056	U	0.19	0.056	mg/Kg	☼	08/26/15 07:31	08/28/15 16:35	1
Bis(2-ethylhexyl) phthalate	0.068	U	0.19	0.068	mg/Kg	☼	08/26/15 07:31	08/28/15 16:35	1
Butyl benzyl phthalate	0.070	U	0.19	0.070	mg/Kg	☼	08/26/15 07:31	08/28/15 16:35	1
Carbazole	0.093	U	0.19	0.093	mg/Kg	☼	08/26/15 07:31	08/28/15 16:35	1
Carbofuran	0.085	U	0.75	0.085	mg/Kg	☼	08/26/15 07:31	08/28/15 16:35	1
4-Chloroaniline	0.17	U	0.75	0.17	mg/Kg	☼	08/26/15 07:31	08/28/15 16:35	1
2-Chlorophenol	0.063	U	0.19	0.063	mg/Kg	☼	08/26/15 07:31	08/28/15 16:35	1
Chrysene	**0.018**	**J**	0.037	0.010	mg/Kg	☼	08/26/15 07:31	08/28/15 16:35	1
Dibenz(a,h)anthracene	0.0072	U	0.037	0.0072	mg/Kg	☼	08/26/15 07:31	08/28/15 16:35	1
1,2-Dichlorobenzene	0.044	U	0.19	0.044	mg/Kg	☼	08/26/15 07:31	08/28/15 16:35	1
1,4-Dichlorobenzene	0.048	U	0.19	0.048	mg/Kg	☼	08/26/15 07:31	08/28/15 16:35	1
3,3'-Dichlorobenzidine	0.052	U	0.19	0.052	mg/Kg	☼	08/26/15 07:31	08/28/15 16:35	1
2,4-Dichlorophenol	0.088	U	0.37	0.088	mg/Kg	☼	08/26/15 07:31	08/28/15 16:35	1
Diethyl phthalate	0.063	U	0.19	0.063	mg/Kg	☼	08/26/15 07:31	08/28/15 16:35	1
2,4-Dimethylphenol	0.14	U	0.37	0.14	mg/Kg	☼	08/26/15 07:31	08/28/15 16:35	1
Di-n-butyl phthalate	0.056	U	0.19	0.056	mg/Kg	☼	08/26/15 07:31	08/28/15 16:35	1
2,4-Dinitrophenol	0.65	U	0.75	0.65	mg/Kg	☼	08/26/15 07:31	08/28/15 16:35	1
2,4-Dinitrotoluene	0.059	U	0.19	0.059	mg/Kg	☼	08/26/15 07:31	08/28/15 16:35	1
2,6-Dinitrotoluene	0.073	U	0.19	0.073	mg/Kg	☼	08/26/15 07:31	08/28/15 16:35	1
Di-n-octyl phthalate	0.060	U	0.19	0.060	mg/Kg	☼	08/26/15 07:31	08/28/15 16:35	1
Fluoranthene	**0.014**	**J**	0.037	0.0069	mg/Kg	☼	08/26/15 07:31	08/28/15 16:35	1
Fluorene	0.0052	U	0.037	0.0052	mg/Kg	☼	08/26/15 07:31	08/28/15 16:35	1
Hexachlorobenzene	0.0086	U	0.075	0.0086	mg/Kg	☼	08/26/15 07:31	08/28/15 16:35	1
Hexachlorocyclopentadiene	0.21	U	0.75	0.21	mg/Kg	☼	08/26/15 07:31	08/28/15 16:35	1
Hexachloroethane	0.056	U	0.19	0.056	mg/Kg	☼	08/26/15 07:31	08/28/15 16:35	1
Indeno[1,2,3-cd]pyrene	0.0096	U	0.037	0.0096	mg/Kg	☼	08/26/15 07:31	08/28/15 16:35	1
Isophorone	0.042	U	0.19	0.042	mg/Kg	☼	08/26/15 07:31	08/28/15 16:35	1
2-Methylphenol	0.059	U	0.19	0.059	mg/Kg	☼	08/26/15 07:31	08/28/15 16:35	1
Naphthalene	0.0057	U	0.037	0.0057	mg/Kg	☼	08/26/15 07:31	08/28/15 16:35	1
Nitrobenzene	0.0092	U	0.037	0.0092	mg/Kg	☼	08/26/15 07:31	08/28/15 16:35	1
4-Nitrophenol	0.35	U	0.75	0.35	mg/Kg	☼	08/26/15 07:31	08/28/15 16:35	1
N-Nitrosodi-n-propylamine	0.045	U	0.19	0.045	mg/Kg	☼	08/26/15 07:31	08/28/15 16:35	1
N-Nitrosodiphenylamine	0.044	U	0.19	0.044	mg/Kg	☼	08/26/15 07:31	08/28/15 16:35	1
Phenanthrene	**0.015**	**J**	0.037	0.0052	mg/Kg	☼	08/26/15 07:31	08/28/15 16:35	1
Phenol	0.082	U	0.19	0.082	mg/Kg	☼	08/26/15 07:31	08/28/15 16:35	1
Pyrene	**0.017**	**J**	0.037	0.0074	mg/Kg	☼	08/26/15 07:31	08/28/15 16:35	1
1,2,4-Trichlorobenzene	0.040	U	0.19	0.040	mg/Kg	☼	08/26/15 07:31	08/28/15 16:35	1
2,4,5-Trichlorophenol	0.085	U	0.37	0.085	mg/Kg	☼	08/26/15 07:31	08/28/15 16:35	1
2,4,6-Trichlorophenol	0.13	U	0.37	0.13	mg/Kg	☼	08/26/15 07:31	08/28/15 16:35	1

Surrogate	*%Recovery*	*Qualifier*	*Limits*	*Prepared*	*Analyzed*	*Dil Fac*
2-Fluorobiphenyl	*86*		*25 - 119*	*08/26/15 07:31*	*08/28/15 16:35*	*1*
2-Fluorophenol	*88*		*25 - 110*	*08/26/15 07:31*	*08/28/15 16:35*	*1*
Nitrobenzene-d5	*92*		*25 - 115*	*08/26/15 07:31*	*08/28/15 16:35*	*1*
Phenol-d5	*95*		*31 - 110*	*08/26/15 07:31*	*08/28/15 16:35*	*1*
Terphenyl-d14	*88*		*36 - 134*	*08/26/15 07:31*	*08/28/15 16:35*	*1*

Client Sample ID: SB-2A 7-8'

Date Collected: 08/21/15 08:54
Date Received: 08/21/15 15:15

Lab Sample ID: 500-100254-5

Matrix: Solid
Percent Solids: 88.3

Method: 8270D - Semivolatile Organic Compounds (GC/MS) (Continued)

Surrogate	%Recovery	Qualifier	Limits	Prepared	Analyzed	Dil Fac
2,4,6-Tribromophenol	65		35 - 137	08/26/15 07:31	08/28/15 16:35	1

Method: 8081B - Organochlorine Pesticides (GC)

Analyte	Result	Qualifier	RL	MDL	Unit	D	Prepared	Analyzed	Dil Fac
Alachlor	0.064	U	0.18	0.064	mg/Kg	☼	08/25/15 16:47	08/26/15 15:26	10
Aldrin	0.0075	U	0.018	0.0075	mg/Kg	☼	08/25/15 16:47	08/26/15 15:26	10
alpha-BHC	0.0046	U	0.018	0.0046	mg/Kg	☼	08/25/15 16:47	08/26/15 15:26	10
Atrazine	0.38	U	1.8	0.38	mg/Kg	☼	08/25/15 16:47	08/26/15 15:26	10
Chlordane (technical)	0.035	U	0.073	0.035	mg/Kg	☼	08/25/15 16:47	08/26/15 15:26	10
4,4'-DDD	0.0036	U	0.018	0.0036	mg/Kg	☼	08/25/15 16:47	08/26/15 15:26	10
4,4'-DDE	0.0030	U	0.018	0.0030	mg/Kg	☼	08/25/15 16:47	08/26/15 15:26	10
4,4'-DDT	0.0095	U *	0.018	0.0095	mg/Kg	☼	08/25/15 16:47	08/26/15 15:26	10
Dieldrin	0.0025	U	0.018	0.0025	mg/Kg	☼	08/25/15 16:47	08/26/15 15:26	10
Endosulfan I	0.0079	U	0.018	0.0079	mg/Kg	☼	08/25/15 16:47	08/26/15 15:26	10
Endosulfan II	0.0029	U *	0.018	0.0029	mg/Kg	☼	08/25/15 16:47	08/26/15 15:26	10
Endrin	0.0025	U	0.018	0.0025	mg/Kg	☼	08/25/15 16:47	08/26/15 15:26	10
gamma-BHC (Lindane)	0.0039	U	0.018	0.0039	mg/Kg	☼	08/25/15 16:47	08/26/15 15:26	10
Heptachlor	0.0076	U	0.018	0.0076	mg/Kg	☼	08/25/15 16:47	08/26/15 15:26	10
Heptachlor epoxide	0.0064	U	0.018	0.0064	mg/Kg	☼	08/25/15 16:47	08/26/15 15:26	10
Methoxychlor	0.0035	U	0.090	0.0035	mg/Kg	☼	08/25/15 16:47	08/26/15 15:26	10
Simazine	0.14	U	0.73	0.14	mg/Kg	☼	08/25/15 16:47	08/26/15 15:26	10
Toxaphene	0.076	U	0.18	0.076	mg/Kg	☼	08/25/15 16:47	08/26/15 15:26	10

Surrogate	%Recovery	Qualifier	Limits	Prepared	Analyzed	Dil Fac
DCB Decachlorobiphenyl	90		56 - 128	08/25/15 16:47	08/26/15 15:26	10
Tetrachloro-m-xylene	78		45 - 112	08/25/15 16:47	08/26/15 15:26	10

Method: 8082A - Polychlorinated Biphenyls (PCBs) by Gas Chromatography

Analyte	Result	Qualifier	RL	MDL	Unit	D	Prepared	Analyzed	Dil Fac
PCB-1016	0.0064	U	0.018	0.0064	mg/Kg	☼	08/25/15 16:47	08/26/15 12:30	1
PCB-1221	0.0079	U	0.018	0.0079	mg/Kg	☼	08/25/15 16:47	08/26/15 12:30	1
PCB-1232	0.0079	U	0.018	0.0079	mg/Kg	☼	08/25/15 16:47	08/26/15 12:30	1
PCB-1242	0.0059	U	0.018	0.0059	mg/Kg	☼	08/25/15 16:47	08/26/15 12:30	1
PCB-1248	0.0071	U	0.018	0.0071	mg/Kg	☼	08/25/15 16:47	08/26/15 12:30	1
PCB-1254	0.0039	U	0.018	0.0039	mg/Kg	☼	08/25/15 16:47	08/26/15 12:30	1
PCB-1260	0.0089	U	0.018	0.0089	mg/Kg	☼	08/25/15 16:47	08/26/15 12:30	1
Polychlorinated biphenyls, Total	0.0035	U	0.018	0.0035	mg/Kg	☼	08/25/15 16:47	08/26/15 12:30	1

Surrogate	%Recovery	Qualifier	Limits	Prepared	Analyzed	Dil Fac
Tetrachloro-m-xylene	67		50 - 116	08/25/15 16:47	08/26/15 12:30	1
DCB Decachlorobiphenyl	86		48 - 142	08/25/15 16:47	08/26/15 12:30	1

Method: 8151 - Herbicides

Analyte	Result	Qualifier	RL	MDL	Unit	D	Prepared	Analyzed	Dil Fac
2,4-D	0.11	U	0.37	0.11	mg/Kg	☼	08/25/15 15:53	08/27/15 20:32	10
Dalapon	0.087	U	0.75	0.087	mg/Kg	☼	08/25/15 15:53	08/27/15 20:32	10
Dinoseb	0.19	U	0.75	0.19	mg/Kg	☼	08/25/15 15:53	08/27/15 20:32	10
Pentachlorophenol	0.068	U	0.19	0.068	mg/Kg	☼	08/25/15 15:53	08/27/15 20:32	10
Picloram	0.077	U	0.19	0.077	mg/Kg	☼	08/25/15 15:53	08/27/15 20:32	10
Silvex (2,4,5-TP)	0.095	U	0.37	0.095	mg/Kg	☼	08/25/15 15:53	08/27/15 20:32	10

Client Sample Results

Client: Civil & Environmental Consultants Inc
Project/Site: CCDD - Yeoman Creek

TestAmerica Job ID: 500-100254-1

Client Sample ID: SB-2A 7-8'

Date Collected: 08/21/15 08:54
Date Received: 08/21/15 15:15

Lab Sample ID: 500-100254-5

Matrix: Solid
Percent Solids: 88.3

Surrogate	*%Recovery*	*Qualifier*	*Limits*	*Prepared*	*Analyzed*	*Dil Fac*
DCAA	*69*		*32 - 122*	*08/25/15 15:53*	*08/27/15 20:32*	*10*

Method: 6010B - Total Metals

Analyte	Result	Qualifier	RL	MDL	Unit	D	Prepared	Analyzed	Dil Fac
Aluminum	**9200**		11	2.7	mg/Kg	☼	08/25/15 18:58	08/26/15 15:50	1
Antimony	**0.42**	**J**	1.1	0.22	mg/Kg	☼	08/25/15 18:58	08/26/15 15:50	1
Arsenic	**6.3**		0.54	0.25	mg/Kg	☼	08/25/15 18:58	08/26/15 15:50	1
Barium	**42**		0.54	0.099	mg/Kg	☼	08/25/15 18:58	08/26/15 15:50	1
Beryllium	**0.58**		0.22	0.047	mg/Kg	☼	08/25/15 18:58	08/26/15 15:50	1
Boron	**13**		2.7	0.38	mg/Kg	☼	08/25/15 18:58	08/26/15 15:50	1
Cadmium	**0.24**		0.11	0.031	mg/Kg	☼	08/25/15 18:58	08/26/15 15:50	1
Calcium	**76000**		110	35	mg/Kg	☼	08/25/15 18:58	08/27/15 14:56	10
Chromium	**16**		0.54	0.093	mg/Kg	☼	08/25/15 18:58	08/26/15 15:50	1
Cobalt	**8.9**		0.27	0.061	mg/Kg	☼	08/25/15 18:58	08/26/15 15:50	1
Copper	**19**		0.54	0.12	mg/Kg	☼	08/25/15 18:58	08/26/15 15:50	1
Iron	**16000**		11	4.2	mg/Kg	☼	08/25/15 18:58	08/26/15 15:50	1
Lead	**14**		0.27	0.13	mg/Kg	☼	08/25/15 18:58	08/26/15 15:50	1
Magnesium	**34000**		5.4	2.2	mg/Kg	☼	08/25/15 18:58	08/26/15 15:50	1
Manganese	**460**		0.54	0.11	mg/Kg	☼	08/25/15 18:58	08/26/15 15:50	1
Nickel	**22**		0.54	0.15	mg/Kg	☼	08/25/15 18:58	08/26/15 15:50	1
Potassium	**3400**		27	4.4	mg/Kg	☼	08/25/15 18:58	08/26/15 15:50	1
Selenium	0.27	U	0.54	0.27	mg/Kg	☼	08/25/15 18:58	08/26/15 15:50	1
Silver	0.063	U	0.27	0.063	mg/Kg	☼	08/25/15 18:58	08/26/15 15:50	1
Sodium	**290**		54	7.1	mg/Kg	☼	08/25/15 18:58	08/26/15 15:50	1
Strontium	**54**		0.27	0.033	mg/Kg	☼	08/25/15 18:58	08/26/15 15:50	1
Thallium	0.27	U	0.54	0.27	mg/Kg	☼	08/25/15 18:58	08/27/15 14:43	1
Vanadium	**19**		0.27	0.079	mg/Kg	☼	08/25/15 18:58	08/26/15 15:50	1
Zinc	**38**	**B**	1.1	0.34	mg/Kg	☼	08/25/15 18:58	08/26/15 15:50	1

Method: 7471B - Mercury (CVAA)

Analyte	Result	Qualifier	RL	MDL	Unit	D	Prepared	Analyzed	Dil Fac
Mercury	0.0063	U	0.018	0.0063	mg/Kg	☼	08/26/15 19:00	08/27/15 10:28	1

General Chemistry

Analyte	Result	Qualifier	RL	MDL	Unit	D	Prepared	Analyzed	Dil Fac
Chromium, hexavalent	0.51	U	1.1	0.51	mg/Kg	☼	08/26/15 15:35	08/27/15 14:23	1
Cyanide, Total	0.17	U	0.52	0.17	mg/Kg	☼	08/26/15 19:50	08/26/15 23:09	1
Cyanide, Amenable	0.17	U	0.52	0.17	mg/Kg	☼	08/26/15 19:50	08/26/15 23:09	1
pH	**8.49**		0.200	0.200	SU			08/25/15 14:51	1
Chloride	**30**		2.2	0.83	mg/Kg	☼	08/24/15 09:49	08/24/15 19:48	1
Fluoride	**2.5**		2.2	0.67	mg/Kg	☼	08/24/15 09:49	08/24/15 19:48	1
Nitrate as N	**1.4**	**J**	2.2	0.50	mg/Kg	☼	08/24/15 09:49	08/24/15 19:48	1
Sulfate	**330**		11	6.9	mg/Kg	☼	08/24/15 09:49	08/27/15 10:44	5
Phosphorus as P	**250**		61	9.0	mg/Kg	☼	08/26/15 11:09	08/27/15 10:18	2

Qualifiers

GC/MS VOA

Qualifier	Qualifier Description
U	Indicates the analyte was analyzed for but not detected.
*	LCS or LCSD is outside acceptance limits.

GC/MS Semi VOA

Qualifier	Qualifier Description
U	Indicates the analyte was analyzed for but not detected.
J	Result is less than the RL but greater than or equal to the MDL and the concentration is an approximate value.

GC Semi VOA

Qualifier	Qualifier Description
F1	MS and/or MSD Recovery is outside acceptance limits.
U	Indicates the analyte was analyzed for but not detected.
F2	MS/MSD RPD exceeds control limits
*	LCS or LCSD is outside acceptance limits.
J	Result is less than the RL but greater than or equal to the MDL and the concentration is an approximate value.
E	Result exceeded calibration range.
D	Surrogate or matrix spike recoveries were not obtained because the extract was diluted for analysis; also compounds analyzed at a dilution may be flagged with a D.

Metals

Qualifier	Qualifier Description
F1	MS and/or MSD Recovery is outside acceptance limits.
J	Result is less than the RL but greater than or equal to the MDL and the concentration is an approximate value.
U	Indicates the analyte was analyzed for but not detected.
B	Compound was found in the blank and sample.
F3	Duplicate RPD exceeds the control limit
4	MS, MSD: The analyte present in the original sample is greater than 4 times the matrix spike concentration; therefore, control limits are not applicable.

General Chemistry

Qualifier	Qualifier Description
J	Result is less than the RL but greater than or equal to the MDL and the concentration is an approximate value.
F1	MS and/or MSD Recovery is outside acceptance limits.
U	Indicates the analyte was analyzed for but not detected.

Glossary

Abbreviation	These commonly used abbreviations may or may not be present in this report.
¤	Listed under the "D" column to designate that the result is reported on a dry weight basis
%R	Percent Recovery
CFL	Contains Free Liquid
CNF	Contains no Free Liquid
DER	Duplicate error ratio (normalized absolute difference)
Dil Fac	Dilution Factor
DL, RA, RE, IN	Indicates a Dilution, Re-analysis, Re-extraction, or additional Initial metals/anion analysis of the sample
DLC	Decision level concentration
MDA	Minimum detectable activity
EDL	Estimated Detection Limit
MDC	Minimum detectable concentration
MDL	Method Detection Limit
ML	Minimum Level (Dioxin)
NC	Not Calculated
ND	Not detected at the reporting limit (or MDL or EDL if shown)
PQL	Practical Quantitation Limit

Glossary (Continued)

Abbreviation	These commonly used abbreviations may or may not be present in this report.
QC	Quality Control
RER	Relative error ratio
RL	Reporting Limit or Requested Limit (Radiochemistry)
RPD	Relative Percent Difference, a measure of the relative difference between two points
TEF	Toxicity Equivalent Factor (Dioxin)
TEQ	Toxicity Equivalent Quotient (Dioxin)

QC Association Summary

Client: Civil & Environmental Consultants Inc
Project/Site: CCDD - Yeoman Creek

TestAmerica Job ID: 500-100254-1

GC/MS VOA

Prep Batch: 301303

Lab Sample ID	Client Sample ID	Prep Type	Matrix	Method	Prep Batch
500-100254-1	SB-3A 7-8'	Total/NA	Solid	5035	
500-100254-2	SB-4A 6-7'	Total/NA	Solid	5035	
500-100254-3	SB-5A 6-7'	Total/NA	Solid	5035	
500-100254-4	SB-1A 6-7'	Total/NA	Solid	5035	
500-100254-5	SB-2A 7-8'	Total/NA	Solid	5035	

Analysis Batch: 301819

Lab Sample ID	Client Sample ID	Prep Type	Matrix	Method	Prep Batch
500-100254-1	SB-3A 7-8'	Total/NA	Solid	8260B	301303
500-100254-2	SB-4A 6-7'	Total/NA	Solid	8260B	301303
500-100254-3	SB-5A 6-7'	Total/NA	Solid	8260B	301303
LCS 500-301819/4	Lab Control Sample	Total/NA	Solid	8260B	
LCSD 500-301819/5	Lab Control Sample Dup	Total/NA	Solid	8260B	
MB 500-301819/8	Method Blank	Total/NA	Solid	8260B	

Analysis Batch: 301884

Lab Sample ID	Client Sample ID	Prep Type	Matrix	Method	Prep Batch
500-100254-4	SB-1A 6-7'	Total/NA	Solid	8260B	301303
500-100254-5	SB-2A 7-8'	Total/NA	Solid	8260B	301303
LCS 500-301884/4	Lab Control Sample	Total/NA	Solid	8260B	
MB 500-301884/6	Method Blank	Total/NA	Solid	8260B	

GC/MS Semi VOA

Prep Batch: 301700

Lab Sample ID	Client Sample ID	Prep Type	Matrix	Method	Prep Batch
500-100254-1	SB-3A 7-8'	Total/NA	Solid	3541	
500-100254-2	SB-4A 6-7'	Total/NA	Solid	3541	
500-100254-3	SB-5A 6-7'	Total/NA	Solid	3541	
500-100254-4	SB-1A 6-7'	Total/NA	Solid	3541	
500-100254-5	SB-2A 7-8'	Total/NA	Solid	3541	
LCS 500-301700/2-A	Lab Control Sample	Total/NA	Solid	3541	
MB 500-301700/1-A	Method Blank	Total/NA	Solid	3541	

Analysis Batch: 302108

Lab Sample ID	Client Sample ID	Prep Type	Matrix	Method	Prep Batch
500-100254-1	SB-3A 7-8'	Total/NA	Solid	8270D	301700
500-100254-2	SB-4A 6-7'	Total/NA	Solid	8270D	301700
500-100254-3	SB-5A 6-7'	Total/NA	Solid	8270D	301700
500-100254-4	SB-1A 6-7'	Total/NA	Solid	8270D	301700
LCS 500-301700/2-A	Lab Control Sample	Total/NA	Solid	8270D	301700
MB 500-301700/1-A	Method Blank	Total/NA	Solid	8270D	301700

Analysis Batch: 302142

Lab Sample ID	Client Sample ID	Prep Type	Matrix	Method	Prep Batch
500-100254-5	SB-2A 7-8'	Total/NA	Solid	8270D	301700

QC Association Summary

Client: Civil & Environmental Consultants Inc
Project/Site: CCDD - Yeoman Creek

TestAmerica Job ID: 500-100254-1

GC Semi VOA

Prep Batch: 301623

Lab Sample ID	Client Sample ID	Prep Type	Matrix	Method	Prep Batch
500-100254-1	SB-3A 7-8'	Total/NA	Solid	8151A	
500-100254-2	SB-4A 6-7'	Total/NA	Solid	8151A	
500-100254-3	SB-5A 6-7'	Total/NA	Solid	8151A	
500-100254-3 MS	SB-5A 6-7'	Total/NA	Solid	8151A	
500-100254-3 MSD	SB-5A 6-7'	Total/NA	Solid	8151A	
500-100254-4	SB-1A 6-7'	Total/NA	Solid	8151A	
500-100254-5	SB-2A 7-8'	Total/NA	Solid	8151A	
LCS 500-301623/2-A	Lab Control Sample	Total/NA	Solid	8151A	
MB 500-301623/1-A	Method Blank	Total/NA	Solid	8151A	

Prep Batch: 301630

Lab Sample ID	Client Sample ID	Prep Type	Matrix	Method	Prep Batch
500-100254-1	SB-3A 7-8'	Total/NA	Solid	3541	
500-100254-1 MS	SB-3A 7-8'	Total/NA	Solid	3541	
500-100254-1 MS	SB-3A 7-8'	Total/NA	Solid	3541	
500-100254-1 MSD	SB-3A 7-8'	Total/NA	Solid	3541	
500-100254-1 MSD	SB-3A 7-8'	Total/NA	Solid	3541	
500-100254-2	SB-4A 6-7'	Total/NA	Solid	3541	
500-100254-3	SB-5A 6-7'	Total/NA	Solid	3541	
500-100254-4	SB-1A 6-7'	Total/NA	Solid	3541	
500-100254-5	SB-2A 7-8'	Total/NA	Solid	3541	
LCS 500-301630/2-A	Lab Control Sample	Total/NA	Solid	3541	
LCS 500-301630/3-A	Lab Control Sample	Total/NA	Solid	3541	
MB 500-301630/1-A	Method Blank	Total/NA	Solid	3541	

Analysis Batch: 301729

Lab Sample ID	Client Sample ID	Prep Type	Matrix	Method	Prep Batch
500-100254-1	SB-3A 7-8'	Total/NA	Solid	8082A	301630
500-100254-1 MS	SB-3A 7-8'	Total/NA	Solid	8082A	301630
500-100254-1 MSD	SB-3A 7-8'	Total/NA	Solid	8082A	301630
500-100254-2	SB-4A 6-7'	Total/NA	Solid	8082A	301630
500-100254-3	SB-5A 6-7'	Total/NA	Solid	8082A	301630
500-100254-4	SB-1A 6-7'	Total/NA	Solid	8082A	301630
500-100254-5	SB-2A 7-8'	Total/NA	Solid	8082A	301630
LCS 500-301630/3-A	Lab Control Sample	Total/NA	Solid	8082A	301630
MB 500-301630/1-A	Method Blank	Total/NA	Solid	8082A	301630

Analysis Batch: 301736

Lab Sample ID	Client Sample ID	Prep Type	Matrix	Method	Prep Batch
500-100254-1	SB-3A 7-8'	Total/NA	Solid	8081B	301630
500-100254-1 MS	SB-3A 7-8'	Total/NA	Solid	8081B	301630
500-100254-1 MSD	SB-3A 7-8'	Total/NA	Solid	8081B	301630
500-100254-2	SB-4A 6-7'	Total/NA	Solid	8081B	301630
500-100254-3	SB-5A 6-7'	Total/NA	Solid	8081B	301630
500-100254-4	SB-1A 6-7'	Total/NA	Solid	8081B	301630
500-100254-5	SB-2A 7-8'	Total/NA	Solid	8081B	301630
LCS 500-301630/2-A	Lab Control Sample	Total/NA	Solid	8081B	301630
MB 500-301630/1-A	Method Blank	Total/NA	Solid	8081B	301630

GC Semi VOA (Continued)

Analysis Batch: 301924

Lab Sample ID	Client Sample ID	Prep Type	Matrix	Method	Prep Batch
500-100254-1	SB-3A 7-8'	Total/NA	Solid	8151	301623
500-100254-2	SB-4A 6-7'	Total/NA	Solid	8151	301623
500-100254-3	SB-5A 6-7'	Total/NA	Solid	8151	301623
500-100254-3 MS	SB-5A 6-7'	Total/NA	Solid	8151	301623
500-100254-3 MSD	SB-5A 6-7'	Total/NA	Solid	8151	301623
500-100254-4	SB-1A 6-7'	Total/NA	Solid	8151	301623
500-100254-5	SB-2A 7-8'	Total/NA	Solid	8151	301623
LCS 500-301623/2-A	Lab Control Sample	Total/NA	Solid	8151	301623
MB 500-301623/1-A	Method Blank	Total/NA	Solid	8151	301623

Metals

Prep Batch: 301666

Lab Sample ID	Client Sample ID	Prep Type	Matrix	Method	Prep Batch
500-100254-1	SB-3A 7-8'	Total/NA	Solid	3050B	
500-100254-1 DU	SB-3A 7-8'	Total/NA	Solid	3050B	
500-100254-1 MS	SB-3A 7-8'	Total/NA	Solid	3050B	
500-100254-1 MSD	SB-3A 7-8'	Total/NA	Solid	3050B	
500-100254-2	SB-4A 6-7'	Total/NA	Solid	3050B	
500-100254-3	SB-5A 6-7'	Total/NA	Solid	3050B	
500-100254-4	SB-1A 6-7'	Total/NA	Solid	3050B	
500-100254-5	SB-2A 7-8'	Total/NA	Solid	3050B	
LCS 500-301666/2-A	Lab Control Sample	Total/NA	Solid	3050B	
MB 500-301666/1-A	Method Blank	Total/NA	Solid	3050B	

Prep Batch: 301825

Lab Sample ID	Client Sample ID	Prep Type	Matrix	Method	Prep Batch
500-100254-1	SB-3A 7-8'	Total/NA	Solid	7471B	
500-100254-2	SB-4A 6-7'	Total/NA	Solid	7471B	
500-100254-3	SB-5A 6-7'	Total/NA	Solid	7471B	
500-100254-4	SB-1A 6-7'	Total/NA	Solid	7471B	
500-100254-5	SB-2A 7-8'	Total/NA	Solid	7471B	
LCS 500-301825/13-A	Lab Control Sample	Total/NA	Solid	7471B	
MB 500-301825/12-A	Method Blank	Total/NA	Solid	7471B	

Analysis Batch: 301901

Lab Sample ID	Client Sample ID	Prep Type	Matrix	Method	Prep Batch
500-100254-1	SB-3A 7-8'	Total/NA	Solid	6010B	301666
500-100254-1 DU	SB-3A 7-8'	Total/NA	Solid	6010B	301666
500-100254-1 MS	SB-3A 7-8'	Total/NA	Solid	6010B	301666
500-100254-1 MSD	SB-3A 7-8'	Total/NA	Solid	6010B	301666
500-100254-2	SB-4A 6-7'	Total/NA	Solid	6010B	301666
500-100254-3	SB-5A 6-7'	Total/NA	Solid	6010B	301666
500-100254-4	SB-1A 6-7'	Total/NA	Solid	6010B	301666
500-100254-5	SB-2A 7-8'	Total/NA	Solid	6010B	301666
LCS 500-301666/2-A	Lab Control Sample	Total/NA	Solid	6010B	301666
MB 500-301666/1-A	Method Blank	Total/NA	Solid	6010B	301666

Metals (Continued)

Analysis Batch: 301967

Lab Sample ID	Client Sample ID	Prep Type	Matrix	Method	Prep Batch
500-100254-1	SB-3A 7-8'	Total/NA	Solid	7471B	301825
500-100254-2	SB-4A 6-7'	Total/NA	Solid	7471B	301825
500-100254-3	SB-5A 6-7'	Total/NA	Solid	7471B	301825
500-100254-4	SB-1A 6-7'	Total/NA	Solid	7471B	301825
500-100254-5	SB-2A 7-8'	Total/NA	Solid	7471B	301825
LCS 500-301825/13-A	Lab Control Sample	Total/NA	Solid	7471B	301825
MB 500-301825/12-A	Method Blank	Total/NA	Solid	7471B	301825

Analysis Batch: 301988

Lab Sample ID	Client Sample ID	Prep Type	Matrix	Method	Prep Batch
500-100254-1	SB-3A 7-8'	Total/NA	Solid	6010B	301666
500-100254-1	SB-3A 7-8'	Total/NA	Solid	6010B	301666
500-100254-1 DU	SB-3A 7-8'	Total/NA	Solid	6010B	301666
500-100254-1 DU	SB-3A 7-8'	Total/NA	Solid	6010B	301666
500-100254-1 MS	SB-3A 7-8'	Total/NA	Solid	6010B	301666
500-100254-1 MS	SB-3A 7-8'	Total/NA	Solid	6010B	301666
500-100254-1 MSD	SB-3A 7-8'	Total/NA	Solid	6010B	301666
500-100254-1 MSD	SB-3A 7-8'	Total/NA	Solid	6010B	301666
500-100254-2	SB-4A 6-7'	Total/NA	Solid	6010B	301666
500-100254-3	SB-5A 6-7'	Total/NA	Solid	6010B	301666
500-100254-4	SB-1A 6-7'	Total/NA	Solid	6010B	301666
500-100254-4	SB-1A 6-7'	Total/NA	Solid	6010B	301666
500-100254-5	SB-2A 7-8'	Total/NA	Solid	6010B	301666
500-100254-5	SB-2A 7-8'	Total/NA	Solid	6010B	301666
LCS 500-301666/2-A	Lab Control Sample	Total/NA	Solid	6010B	301666
MB 500-301666/1-A	Method Blank	Total/NA	Solid	6010B	301666

General Chemistry

Prep Batch: 301361

Lab Sample ID	Client Sample ID	Prep Type	Matrix	Method	Prep Batch
500-100254-1	SB-3A 7-8'	Total/NA	Solid	300_Prep	
500-100254-2	SB-4A 6-7'	Total/NA	Solid	300_Prep	
500-100254-3	SB-5A 6-7'	Total/NA	Solid	300_Prep	
500-100254-4	SB-1A 6-7'	Total/NA	Solid	300_Prep	
500-100254-5	SB-2A 7-8'	Total/NA	Solid	300_Prep	
LCS 500-301361/2-A	Lab Control Sample	Total/NA	Solid	300_Prep	
MB 500-301361/1-A	Method Blank	Total/NA	Solid	300_Prep	

Analysis Batch: 301397

Lab Sample ID	Client Sample ID	Prep Type	Matrix	Method	Prep Batch
500-100254-1	SB-3A 7-8'	Total/NA	Solid	Moisture	
500-100254-2	SB-4A 6-7'	Total/NA	Solid	Moisture	
500-100254-3	SB-5A 6-7'	Total/NA	Solid	Moisture	
500-100254-4	SB-1A 6-7'	Total/NA	Solid	Moisture	
500-100254-5	SB-2A 7-8'	Total/NA	Solid	Moisture	

Analysis Batch: 301403

Lab Sample ID	Client Sample ID	Prep Type	Matrix	Method	Prep Batch
500-100254-1	SB-3A 7-8'	Total/NA	Solid	9056A	301361

General Chemistry (Continued)

Analysis Batch: 301403 (Continued)

Lab Sample ID	Client Sample ID	Prep Type	Matrix	Method	Prep Batch
500-100254-2	SB-4A 6-7'	Total/NA	Solid	9056A	301361
500-100254-3	SB-5A 6-7'	Total/NA	Solid	9056A	301361
500-100254-4	SB-1A 6-7'	Total/NA	Solid	9056A	301361
500-100254-5	SB-2A 7-8'	Total/NA	Solid	9056A	301361
LCS 500-301361/2-A	Lab Control Sample	Total/NA	Solid	9056A	301361
MB 500-301361/1-A	Method Blank	Total/NA	Solid	9056A	301361

Analysis Batch: 301621

Lab Sample ID	Client Sample ID	Prep Type	Matrix	Method	Prep Batch
500-100254-1	SB-3A 7-8'	Total/NA	Solid	9045D	
500-100254-2	SB-4A 6-7'	Total/NA	Solid	9045D	
500-100254-3	SB-5A 6-7'	Total/NA	Solid	9045D	
500-100254-4	SB-1A 6-7'	Total/NA	Solid	9045D	
500-100254-4 DU	SB-1A 6-7'	Total/NA	Solid	9045D	
500-100254-5	SB-2A 7-8'	Total/NA	Solid	9045D	

Analysis Batch: 301734

Lab Sample ID	Client Sample ID	Prep Type	Matrix	Method	Prep Batch
500-100254-1	SB-3A 7-8'	Total/NA	Solid	9056A	301361
500-100254-2	SB-4A 6-7'	Total/NA	Solid	9056A	301361
500-100254-3	SB-5A 6-7'	Total/NA	Solid	9056A	301361
500-100254-4	SB-1A 6-7'	Total/NA	Solid	9056A	301361
LCS 500-301361/2-A	Lab Control Sample	Total/NA	Solid	9056A	301361
MB 500-301361/1-A	Method Blank	Total/NA	Solid	9056A	301361

Prep Batch: 301750

Lab Sample ID	Client Sample ID	Prep Type	Matrix	Method	Prep Batch
500-100254-1	SB-3A 7-8'	Total/NA	Solid	SM 4500 P B	
500-100254-1 MS	SB-3A 7-8'	Total/NA	Solid	SM 4500 P B	
500-100254-1 MSD	SB-3A 7-8'	Total/NA	Solid	SM 4500 P B	
500-100254-2	SB-4A 6-7'	Total/NA	Solid	SM 4500 P B	
500-100254-3	SB-5A 6-7'	Total/NA	Solid	SM 4500 P B	
500-100254-4	SB-1A 6-7'	Total/NA	Solid	SM 4500 P B	
500-100254-5	SB-2A 7-8'	Total/NA	Solid	SM 4500 P B	
LCS 500-301750/2-A	Lab Control Sample	Total/NA	Solid	SM 4500 P B	
MB 500-301750/1-A	Method Blank	Total/NA	Solid	SM 4500 P B	

Prep Batch: 301792

Lab Sample ID	Client Sample ID	Prep Type	Matrix	Method	Prep Batch
500-100254-1	SB-3A 7-8'	Total/NA	Solid	3060A	
500-100254-1 MS	SB-3A 7-8'	Total/NA	Solid	3060A	
500-100254-1 MS	SB-3A 7-8'	Total/NA	Solid	3060A	
500-100254-1 MSD	SB-3A 7-8'	Total/NA	Solid	3060A	
500-100254-1 MSD	SB-3A 7-8'	Total/NA	Solid	3060A	
500-100254-2	SB-4A 6-7'	Total/NA	Solid	3060A	
500-100254-3	SB-5A 6-7'	Total/NA	Solid	3060A	
500-100254-4	SB-1A 6-7'	Total/NA	Solid	3060A	
500-100254-5	SB-2A 7-8'	Total/NA	Solid	3060A	
LCS 500-301792/2-A	Lab Control Sample	Total/NA	Solid	3060A	
LCS 500-301792/3-A	Lab Control Sample	Total/NA	Solid	3060A	
MB 500-301792/1-A	Method Blank	Total/NA	Solid	3060A	

QC Association Summary

Client: Civil & Environmental Consultants Inc
Project/Site: CCDD - Yeoman Creek

TestAmerica Job ID: 500-100254-1

Prep Batch: 301850

Lab Sample ID	Client Sample ID	Prep Type	Matrix	Method	Prep Batch
500-100254-1	SB-3A 7-8'	Total/NA	Solid	9010B	
500-100254-2	SB-4A 6-7'	Total/NA	Solid	9010B	
500-100254-3	SB-5A 6-7'	Total/NA	Solid	9010B	
500-100254-4	SB-1A 6-7'	Total/NA	Solid	9010B	
500-100254-5	SB-2A 7-8'	Total/NA	Solid	9010B	
LCS 500-301850/2-A	Lab Control Sample	Total/NA	Solid	9010B	
MB 500-301850/1-A	Method Blank	Total/NA	Solid	9010B	

Analysis Batch: 301929

Lab Sample ID	Client Sample ID	Prep Type	Matrix	Method	Prep Batch
500-100254-1	SB-3A 7-8'	Total/NA	Solid	SM 4500 P E	301750
500-100254-1 MS	SB-3A 7-8'	Total/NA	Solid	SM 4500 P E	301750
500-100254-1 MSD	SB-3A 7-8'	Total/NA	Solid	SM 4500 P E	301750
500-100254-2	SB-4A 6-7'	Total/NA	Solid	SM 4500 P E	301750
500-100254-3	SB-5A 6-7'	Total/NA	Solid	SM 4500 P E	301750
500-100254-4	SB-1A 6-7'	Total/NA	Solid	SM 4500 P E	301750
500-100254-5	SB-2A 7-8'	Total/NA	Solid	SM 4500 P E	301750
LCS 500-301750/2-A	Lab Control Sample	Total/NA	Solid	SM 4500 P E	301750
MB 500-301750/1-A	Method Blank	Total/NA	Solid	SM 4500 P E	301750

Analysis Batch: 301932

Lab Sample ID	Client Sample ID	Prep Type	Matrix	Method	Prep Batch
500-100254-1	SB-3A 7-8'	Total/NA	Solid	9014	301850
500-100254-2	SB-4A 6-7'	Total/NA	Solid	9014	301850
500-100254-3	SB-5A 6-7'	Total/NA	Solid	9014	301850
500-100254-4	SB-1A 6-7'	Total/NA	Solid	9014	301850
500-100254-5	SB-2A 7-8'	Total/NA	Solid	9014	301850
LCS 500-301850/2-A	Lab Control Sample	Total/NA	Solid	9014	301850
MB 500-301850/1-A	Method Blank	Total/NA	Solid	9014	301850

Analysis Batch: 301945

Lab Sample ID	Client Sample ID	Prep Type	Matrix	Method	Prep Batch
500-100254-5	SB-2A 7-8'	Total/NA	Solid	9056A	301361

Analysis Batch: 301979

Lab Sample ID	Client Sample ID	Prep Type	Matrix	Method	Prep Batch
500-100254-1	SB-3A 7-8'	Total/NA	Solid	7196A	301792
500-100254-1 MS	SB-3A 7-8'	Total/NA	Solid	7196A	301792
500-100254-1 MS	SB-3A 7-8'	Total/NA	Solid	7196A	301792
500-100254-1 MSD	SB-3A 7-8'	Total/NA	Solid	7196A	301792
500-100254-1 MSD	SB-3A 7-8'	Total/NA	Solid	7196A	301792
500-100254-2	SB-4A 6-7'	Total/NA	Solid	7196A	301792
500-100254-3	SB-5A 6-7'	Total/NA	Solid	7196A	301792
500-100254-4	SB-1A 6-7'	Total/NA	Solid	7196A	301792
500-100254-5	SB-2A 7-8'	Total/NA	Solid	7196A	301792
LCS 500-301792/2-A	Lab Control Sample	Total/NA	Solid	7196A	301792
LCS 500-301792/3-A	Lab Control Sample	Total/NA	Solid	7196A	301792
MB 500-301792/1-A	Method Blank	Total/NA	Solid	7196A	301792

Surrogate Summary

Client: Civil & Environmental Consultants Inc
Project/Site: CCDD - Yeoman Creek

TestAmerica Job ID: 500-100254-1

Method: 8260B - Volatile Organic Compounds (GC/MS)

Matrix: Solid **Prep Type: Total/NA**

		Percent Surrogate Recovery (Acceptance Limits)			
		BFB	DBFM	12DCE	TOL
Lab Sample ID	Client Sample ID	(70-122)	(75-120)	(70-134)	(75-122)
500-100254-1	SB-3A 7-8'	111	102	115	114
500-100254-2	SB-4A 6-7'	109	105	117	112
500-100254-3	SB-5A 6-7'	115	110	121	108
500-100254-4	SB-1A 6-7'	111	101	113	117
500-100254-5	SB-2A 7-8'	110	104	114	116
LCS 500-301819/4	Lab Control Sample	118	99	106	114
LCS 500-301884/4	Lab Control Sample	121	97	103	118
LCSD 500-301819/5	Lab Control Sample Dup	121	99	108	117
MB 500-301819/8	Method Blank	115	101	107	114
MB 500-301884/6	Method Blank	114	102	109	116

Surrogate Legend

BFB = 4-Bromofluorobenzene (Surr)
DBFM = Dibromofluoromethane
12DCE = 1,2-Dichloroethane-d4 (Surr)
TOL = Toluene-d8 (Surr)

Method: 8270D - Semivolatile Organic Compounds (GC/MS)

Matrix: Solid **Prep Type: Total/NA**

		Percent Surrogate Recovery (Acceptance Limits)					
		FBP	2FP	NBZ	PHL	TPH	TBP
Lab Sample ID	Client Sample ID	(25-119)	(25-110)	(25-115)	(31-110)	(36-134)	(35-137)
500-100254-1	SB-3A 7-8'	88	85	96	91	102	90
500-100254-2	SB-4A 6-7'	85	83	92	86	94	72
500-100254-3	SB-5A 6-7'	83	82	89	81	105	102
500-100254-4	SB-1A 6-7'	83	82	100	87	110	88
500-100254-5	SB-2A 7-8'	86	88	92	95	88	65
LCS 500-301700/2-A	Lab Control Sample	86	89	98	85	99	100
MB 500-301700/1-A	Method Blank	95	83	97	83	93	85

Surrogate Legend

FBP = 2-Fluorobiphenyl
2FP = 2-Fluorophenol
NBZ = Nitrobenzene-d5
PHL = Phenol-d5
TPH = Terphenyl-d14
TBP = 2,4,6-Tribromophenol

Method: 8081B - Organochlorine Pesticides (GC)

Matrix: Solid **Prep Type: Total/NA**

		Percent Surrogate Recovery (Acceptance Limits)	
		DCB2	TCX2
Lab Sample ID	Client Sample ID	(56-128)	(45-112)
500-100254-1	SB-3A 7-8'	99	84
500-100254-1 MS	SB-3A 7-8'	102	73
500-100254-1 MSD	SB-3A 7-8'	97	81
500-100254-2	SB-4A 6-7'	0 D	0 D
500-100254-3	SB-5A 6-7'	0 D	0 D

Method: 8081B - Organochlorine Pesticides (GC) (Continued)

Matrix: Solid **Prep Type: Total/NA**

		Percent Surrogate Recovery (Acceptance Limits)	
Lab Sample ID	Client Sample ID	DCB2 (56-128)	TCX2 (45-112)
500-100254-4	SB-1A 6-7'	103	75
500-100254-5	SB-2A 7-8'	90	78
LCS 500-301630/2-A	Lab Control Sample	98	84
MB 500-301630/1-A	Method Blank	98	86

Surrogate Legend

DCB = DCB Decachlorobiphenyl

TCX = Tetrachloro-m-xylene

Method: 8082A - Polychlorinated Biphenyls (PCBs) by Gas Chromatography

Matrix: Solid **Prep Type: Total/NA**

		Percent Surrogate Recovery (Acceptance Limits)	
Lab Sample ID	Client Sample ID	TCX1 (50-116)	DCB1 (48-142)
500-100254-1	SB-3A 7-8'	80	95
500-100254-1 MS	SB-3A 7-8'	85	106
500-100254-1 MSD	SB-3A 7-8'	83	103
500-100254-2	SB-4A 6-7'	76	101
500-100254-3	SB-5A 6-7'	78	108
500-100254-4	SB-1A 6-7'	69	90
500-100254-5	SB-2A 7-8'	67	86
LCS 500-301630/3-A	Lab Control Sample	58	103
MB 500-301630/1-A	Method Blank	90	101

Surrogate Legend

TCX = Tetrachloro-m-xylene

DCB = DCB Decachlorobiphenyl

Method: 8151 - Herbicides

Matrix: Solid **Prep Type: Total/NA**

		Percent Surrogate Recovery (Acceptance Limits)
Lab Sample ID	Client Sample ID	DCPA2 (32-122)
500-100254-1	SB-3A 7-8'	40
500-100254-2	SB-4A 6-7'	55
500-100254-3	SB-5A 6-7'	45
500-100254-3 MS	SB-5A 6-7'	48
500-100254-3 MSD	SB-5A 6-7'	62
500-100254-4	SB-1A 6-7'	39
500-100254-5	SB-2A 7-8'	69
LCS 500-301623/2-A	Lab Control Sample	52
MB 500-301623/1-A	Method Blank	45

Surrogate Legend

DCPA = DCAA

Method: 8260B - Volatile Organic Compounds (GC/MS)

Lab Sample ID: MB 500-301819/8
Matrix: Solid
Analysis Batch: 301819

Client Sample ID: Method Blank
Prep Type: Total/NA

Analyte	MB Result	MB Qualifier	RL	MDL	Unit	D	Prepared	Analyzed	Dil Fac
Acetone	0.0039	U	0.020	0.0039	mg/Kg			08/26/15 22:20	1
Benzene	0.0011	U	0.0050	0.0011	mg/Kg			08/26/15 22:20	1
Bromodichloromethane	0.00084	U	0.0050	0.00084	mg/Kg			08/26/15 22:20	1
Bromoform	0.0010	U	0.0050	0.0010	mg/Kg			08/26/15 22:20	1
Bromomethane	0.0018	U	0.0050	0.0018	mg/Kg			08/26/15 22:20	1
Carbon disulfide	0.0018	U	0.0050	0.0018	mg/Kg			08/26/15 22:20	1
Carbon tetrachloride	0.0011	U	0.0050	0.0011	mg/Kg			08/26/15 22:20	1
Chlorobenzene	0.0012	U	0.0050	0.0012	mg/Kg			08/26/15 22:20	1
Chloroform	0.00098	U	0.0050	0.00098	mg/Kg			08/26/15 22:20	1
cis-1,2-Dichloroethene	0.0010	U	0.0050	0.0010	mg/Kg			08/26/15 22:20	1
Dibromochloromethane	0.00058	U	0.0050	0.00058	mg/Kg			08/26/15 22:20	1
1,2-Dibromo-3-Chloropropane	0.0021	U	0.0050	0.0021	mg/Kg			08/26/15 22:20	1
1,2-Dibromoethane	0.0013	U	0.0050	0.0013	mg/Kg			08/26/15 22:20	1
1,1-Dichloroethane	0.0010	U	0.0050	0.0010	mg/Kg			08/26/15 22:20	1
1,2-Dichloroethane	0.00074	U	0.0050	0.00074	mg/Kg			08/26/15 22:20	1
1,1-Dichloroethene	0.0018	U	0.0050	0.0018	mg/Kg			08/26/15 22:20	1
1,2-Dichloropropane	0.0013	U	0.0050	0.0013	mg/Kg			08/26/15 22:20	1
1,3-Dichloropropene, Total	0.0014	U	0.0050	0.0014	mg/Kg			08/26/15 22:20	1
Ethylbenzene	0.0012	U	0.0050	0.0012	mg/Kg			08/26/15 22:20	1
Methylene Chloride	0.0038	U	0.0050	0.0038	mg/Kg			08/26/15 22:20	1
Methyl tert-butyl ether	0.0012	U	0.0050	0.0012	mg/Kg			08/26/15 22:20	1
m&p-Xylene	0.0019	U	0.010	0.0019	mg/Kg			08/26/15 22:20	1
n-Butyl alcohol	0.025	U	0.13	0.025	mg/Kg			08/26/15 22:20	1
o-Xylene	0.0013	U	0.0050	0.0013	mg/Kg			08/26/15 22:20	1
Styrene	0.0012	U	0.0050	0.0012	mg/Kg			08/26/15 22:20	1
Tetrachloroethene	0.0010	U	0.0050	0.0010	mg/Kg			08/26/15 22:20	1
Toluene	0.0017	U	0.0050	0.0017	mg/Kg			08/26/15 22:20	1
2-Butanone (MEK)	0.0018	U	0.0050	0.0018	mg/Kg			08/26/15 22:20	1
trans-1,2-Dichloroethene	0.0013	U	0.0050	0.0013	mg/Kg			08/26/15 22:20	1
1,1,1-Trichloroethane	0.0012	U	0.0050	0.0012	mg/Kg			08/26/15 22:20	1
1,1,2-Trichloroethane	0.00097	U	0.0050	0.00097	mg/Kg			08/26/15 22:20	1
Trichloroethene	0.0014	U	0.0050	0.0014	mg/Kg			08/26/15 22:20	1
Vinyl acetate	0.0013	U	0.0050	0.0013	mg/Kg			08/26/15 22:20	1
Vinyl chloride	0.0012	U	0.0050	0.0012	mg/Kg			08/26/15 22:20	1
Xylenes, Total	0.0019	U	0.010	0.0019	mg/Kg			08/26/15 22:20	1

Surrogate	*MB %Recovery*	*MB Qualifier*	*Limits*	*Prepared*	*Analyzed*	*Dil Fac*
4-Bromofluorobenzene (Surr)	*115*		*70 - 122*		*08/26/15 22:20*	*1*
Dibromofluoromethane	*101*		*75 - 120*		*08/26/15 22:20*	*1*
1,2-Dichloroethane-d4 (Surr)	*107*		*70 - 134*		*08/26/15 22:20*	*1*
Toluene-d8 (Surr)	*114*		*75 - 122*		*08/26/15 22:20*	*1*

Lab Sample ID: LCS 500-301819/4
Matrix: Solid
Analysis Batch: 301819

Client Sample ID: Lab Control Sample
Prep Type: Total/NA

Analyte	Spike Added	LCS Result	LCS Qualifier	Unit	D	%Rec	%Rec. Limits
Acetone	0.0500	0.0474		mg/Kg		95	50 - 133

Method: 8260B - Volatile Organic Compounds (GC/MS) (Continued)

Lab Sample ID: LCS 500-301819/4
Matrix: Solid
Analysis Batch: 301819

Client Sample ID: Lab Control Sample
Prep Type: Total/NA

Analyte	Spike Added	LCS Result	LCS Qualifier	Unit	D	%Rec	%Rec. Limits
Benzene	0.0500	0.0434		mg/Kg		87	70 - 120
Bromodichloromethane	0.0500	0.0429		mg/Kg		86	69 - 120
Bromoform	0.0500	0.0357		mg/Kg		71	51 - 127
Bromomethane	0.0500	0.0249	*	mg/Kg		50	69 - 120
Carbon disulfide	0.0500	0.0397		mg/Kg		79	58 - 120
Carbon tetrachloride	0.0500	0.0423		mg/Kg		85	51 - 124
Chlorobenzene	0.0500	0.0422		mg/Kg		84	70 - 120
Chloroform	0.0500	0.0441		mg/Kg		88	70 - 120
cis-1,2-Dichloroethene	0.0500	0.0438		mg/Kg		88	70 - 120
Dibromochloromethane	0.0500	0.0410		mg/Kg		82	69 - 126
1,2-Dibromo-3-Chloropropane	0.0500	0.0416		mg/Kg		83	59 - 150
1,2-Dibromoethane	0.0500	0.0410		mg/Kg		82	70 - 120
1,1-Dichloroethane	0.0500	0.0452		mg/Kg		90	70 - 120
1,2-Dichloroethane	0.0500	0.0435		mg/Kg		87	70 - 128
1,1-Dichloroethene	0.0500	0.0417		mg/Kg		83	67 - 120
1,2-Dichloropropane	0.0500	0.0437		mg/Kg		87	70 - 120
Ethylbenzene	0.0500	0.0433		mg/Kg		87	70 - 120
Methylene Chloride	0.0500	0.0441		mg/Kg		88	70 - 120
Methyl tert-butyl ether	0.0500	0.0436		mg/Kg		87	70 - 120
Styrene	0.0500	0.0420		mg/Kg		84	70 - 120
Tetrachloroethene	0.0500	0.0439		mg/Kg		88	70 - 120
Toluene	0.0500	0.0444		mg/Kg		89	70 - 120
2-Butanone (MEK)	0.0500	0.0461		mg/Kg		92	50 - 148
trans-1,2-Dichloroethene	0.0500	0.0408		mg/Kg		82	70 - 120
1,1,1-Trichloroethane	0.0500	0.0458		mg/Kg		92	70 - 120
1,1,2-Trichloroethane	0.0500	0.0421		mg/Kg		84	70 - 120
Trichloroethene	0.0500	0.0425		mg/Kg		85	70 - 120
Vinyl acetate	0.0500	0.0577		mg/Kg		115	60 - 150
Vinyl chloride	0.0500	0.0466		mg/Kg		93	69 - 120
Xylenes, Total	0.100	0.0925		mg/Kg		92	70 - 120

Surrogate	*LCS %Recovery*	*LCS Qualifier*	*Limits*
4-Bromofluorobenzene (Surr)	*118*		*70 - 122*
Dibromofluoromethane	*99*		*75 - 120*
1,2-Dichloroethane-d4 (Surr)	*106*		*70 - 134*
Toluene-d8 (Surr)	*114*		*75 - 122*

Lab Sample ID: LCSD 500-301819/5
Matrix: Solid
Analysis Batch: 301819

Client Sample ID: Lab Control Sample Dup
Prep Type: Total/NA

Analyte	Spike Added	LCSD Result	LCSD Qualifier	Unit	D	%Rec	%Rec. Limits	RPD	RPD Limit
Acetone	0.0500	0.0431		mg/Kg		86	50 - 133	10	30
Benzene	0.0500	0.0385		mg/Kg		77	70 - 120	12	30
Bromodichloromethane	0.0500	0.0386		mg/Kg		77	69 - 120	11	30
Bromoform	0.0500	0.0348		mg/Kg		70	51 - 127	3	30
Bromomethane	0.0500	0.0226	*	mg/Kg		45	69 - 120	9	30
Carbon disulfide	0.0500	0.0361		mg/Kg		72	58 - 120	9	30

Method: 8260B - Volatile Organic Compounds (GC/MS) (Continued)

Lab Sample ID: LCSD 500-301819/5
Matrix: Solid
Analysis Batch: 301819

Client Sample ID: Lab Control Sample Dup
Prep Type: Total/NA

Analyte	Spike Added	LCSD Result	LCSD Qualifier	Unit	D	%Rec	%Rec. Limits	RPD	RPD Limit
Carbon tetrachloride	0.0500	0.0391		mg/Kg		78	51 - 124	8	30
Chlorobenzene	0.0500	0.0397		mg/Kg		79	70 - 120	6	30
Chloroform	0.0500	0.0390		mg/Kg		78	70 - 120	12	30
cis-1,2-Dichloroethene	0.0500	0.0385		mg/Kg		77	70 - 120	13	30
Dibromochloromethane	0.0500	0.0379		mg/Kg		76	69 - 126	8	30
1,2-Dibromo-3-Chloropropane	0.0500	0.0403		mg/Kg		81	59 - 150	3	30
1,2-Dibromoethane	0.0500	0.0385		mg/Kg		77	70 - 120	6	30
1,1-Dichloroethane	0.0500	0.0402		mg/Kg		80	70 - 120	12	30
1,2-Dichloroethane	0.0500	0.0387		mg/Kg		77	70 - 128	12	30
1,1-Dichloroethene	0.0500	0.0379		mg/Kg		76	67 - 120	10	30
1,2-Dichloropropane	0.0500	0.0387		mg/Kg		77	70 - 120	12	30
Ethylbenzene	0.0500	0.0411		mg/Kg		82	70 - 120	5	30
Methylene Chloride	0.0500	0.0377		mg/Kg		75	70 - 120	16	30
Methyl tert-butyl ether	0.0500	0.0388		mg/Kg		78	70 - 120	12	30
Styrene	0.0500	0.0387		mg/Kg		77	70 - 120	8	30
Tetrachloroethene	0.0500	0.0414		mg/Kg		83	70 - 120	6	30
Toluene	0.0500	0.0410		mg/Kg		82	70 - 120	8	30
2-Butanone (MEK)	0.0500	0.0445		mg/Kg		89	50 - 148	4	30
trans-1,2-Dichloroethene	0.0500	0.0376		mg/Kg		75	70 - 120	8	30
1,1,1-Trichloroethane	0.0500	0.0413		mg/Kg		83	70 - 120	10	30
1,1,2-Trichloroethane	0.0500	0.0396		mg/Kg		79	70 - 120	6	30
Trichloroethene	0.0500	0.0384		mg/Kg		77	70 - 120	10	30
Vinyl acetate	0.0500	0.0495		mg/Kg		99	60 - 150	15	30
Vinyl chloride	0.0500	0.0436		mg/Kg		87	69 - 120	6	30
Xylenes, Total	0.100	0.0864		mg/Kg		86	70 - 120	7	30

Surrogate	*LCSD %Recovery*	*LCSD Qualifier*	*Limits*
4-Bromofluorobenzene (Surr)	*121*		*70 - 122*
Dibromofluoromethane	*99*		*75 - 120*
1,2-Dichloroethane-d4 (Surr)	*108*		*70 - 134*
Toluene-d8 (Surr)	*117*		*75 - 122*

Lab Sample ID: MB 500-301884/6
Matrix: Solid
Analysis Batch: 301884

Client Sample ID: Method Blank
Prep Type: Total/NA

Analyte	MB Result	MB Qualifier	RL	MDL	Unit	D	Prepared	Analyzed	Dil Fac
Acetone	0.0039	U	0.020	0.0039	mg/Kg			08/27/15 10:02	1
Benzene	0.0011	U	0.0050	0.0011	mg/Kg			08/27/15 10:02	1
Bromodichloromethane	0.00084	U	0.0050	0.00084	mg/Kg			08/27/15 10:02	1
Bromoform	0.0010	U	0.0050	0.0010	mg/Kg			08/27/15 10:02	1
Bromomethane	0.0018	U	0.0050	0.0018	mg/Kg			08/27/15 10:02	1
Carbon disulfide	0.0018	U	0.0050	0.0018	mg/Kg			08/27/15 10:02	1
Carbon tetrachloride	0.0011	U	0.0050	0.0011	mg/Kg			08/27/15 10:02	1
Chlorobenzene	0.0012	U	0.0050	0.0012	mg/Kg			08/27/15 10:02	1
Chloroform	0.00098	U	0.0050	0.00098	mg/Kg			08/27/15 10:02	1
cis-1,2-Dichloroethene	0.0010	U	0.0050	0.0010	mg/Kg			08/27/15 10:02	1
Dibromochloromethane	0.00058	U	0.0050	0.00058	mg/Kg			08/27/15 10:02	1

Method: 8260B - Volatile Organic Compounds (GC/MS) (Continued)

Lab Sample ID: MB 500-301884/6
Matrix: Solid
Analysis Batch: 301884

Client Sample ID: Method Blank
Prep Type: Total/NA

Analyte	MB Result	MB Qualifier	RL	MDL	Unit	D	Prepared	Analyzed	Dil Fac
1,2-Dibromo-3-Chloropropane	0.0021	U	0.0050	0.0021	mg/Kg			08/27/15 10:02	1
1,2-Dibromoethane	0.0013	U	0.0050	0.0013	mg/Kg			08/27/15 10:02	1
1,1-Dichloroethane	0.0010	U	0.0050	0.0010	mg/Kg			08/27/15 10:02	1
1,2-Dichloroethane	0.00074	U	0.0050	0.00074	mg/Kg			08/27/15 10:02	1
1,1-Dichloroethene	0.0018	U	0.0050	0.0018	mg/Kg			08/27/15 10:02	1
1,2-Dichloropropane	0.0013	U	0.0050	0.0013	mg/Kg			08/27/15 10:02	1
1,3-Dichloropropene, Total	0.0014	U	0.0050	0.0014	mg/Kg			08/27/15 10:02	1
Ethylbenzene	0.0012	U	0.0050	0.0012	mg/Kg			08/27/15 10:02	1
Methylene Chloride	0.0038	U	0.0050	0.0038	mg/Kg			08/27/15 10:02	1
Methyl tert-butyl ether	0.0012	U	0.0050	0.0012	mg/Kg			08/27/15 10:02	1
m&p-Xylene	0.0019	U	0.010	0.0019	mg/Kg			08/27/15 10:02	1
n-Butyl alcohol	0.025	U	0.13	0.025	mg/Kg			08/27/15 10:02	1
o-Xylene	0.0013	U	0.0050	0.0013	mg/Kg			08/27/15 10:02	1
Styrene	0.0012	U	0.0050	0.0012	mg/Kg			08/27/15 10:02	1
Tetrachloroethene	0.0010	U	0.0050	0.0010	mg/Kg			08/27/15 10:02	1
Toluene	0.0017	U	0.0050	0.0017	mg/Kg			08/27/15 10:02	1
2-Butanone (MEK)	0.0018	U	0.0050	0.0018	mg/Kg			08/27/15 10:02	1
trans-1,2-Dichloroethene	0.0013	U	0.0050	0.0013	mg/Kg			08/27/15 10:02	1
1,1,1-Trichloroethane	0.0012	U	0.0050	0.0012	mg/Kg			08/27/15 10:02	1
1,1,2-Trichloroethane	0.00097	U	0.0050	0.00097	mg/Kg			08/27/15 10:02	1
Trichloroethene	0.0014	U	0.0050	0.0014	mg/Kg			08/27/15 10:02	1
Vinyl acetate	0.0013	U	0.0050	0.0013	mg/Kg			08/27/15 10:02	1
Vinyl chloride	0.0012	U	0.0050	0.0012	mg/Kg			08/27/15 10:02	1
Xylenes, Total	0.0019	U	0.010	0.0019	mg/Kg			08/27/15 10:02	1

Surrogate	*MB %Recovery*	*MB Qualifier*	*Limits*	*Prepared*	*Analyzed*	*Dil Fac*
4-Bromofluorobenzene (Surr)	*114*		*70 - 122*		*08/27/15 10:02*	*1*
Dibromofluoromethane	*102*		*75 - 120*		*08/27/15 10:02*	*1*
1,2-Dichloroethane-d4 (Surr)	*109*		*70 - 134*		*08/27/15 10:02*	*1*
Toluene-d8 (Surr)	*116*		*75 - 122*		*08/27/15 10:02*	*1*

Lab Sample ID: LCS 500-301884/4
Matrix: Solid
Analysis Batch: 301884

Client Sample ID: Lab Control Sample
Prep Type: Total/NA

Analyte	Spike Added	LCS Result	LCS Qualifier	Unit	D	%Rec	%Rec. Limits
Acetone	0.0500	0.0527		mg/Kg		105	50 - 133
Benzene	0.0500	0.0483		mg/Kg		97	70 - 120
Bromodichloromethane	0.0500	0.0456		mg/Kg		91	69 - 120
Bromoform	0.0500	0.0380		mg/Kg		76	51 - 127
Bromomethane	0.0500	0.0282	*	mg/Kg		56	69 - 120
Carbon disulfide	0.0500	0.0451		mg/Kg		90	58 - 120
Carbon tetrachloride	0.0500	0.0485		mg/Kg		97	51 - 124
Chlorobenzene	0.0500	0.0488		mg/Kg		98	70 - 120
Chloroform	0.0500	0.0492		mg/Kg		98	70 - 120
cis-1,2-Dichloroethene	0.0500	0.0474		mg/Kg		95	70 - 120
Dibromochloromethane	0.0500	0.0439		mg/Kg		88	69 - 126
1,2-Dibromo-3-Chloropropane	0.0500	0.0432		mg/Kg		86	59 - 150

Method: 8260B - Volatile Organic Compounds (GC/MS) (Continued)

Lab Sample ID: LCS 500-301884/4
Matrix: Solid
Analysis Batch: 301884

Client Sample ID: Lab Control Sample
Prep Type: Total/NA

Analyte	Spike Added	LCS Result	LCS Qualifier	Unit	D	%Rec	%Rec. Limits
1,2-Dibromoethane	0.0500	0.0447		mg/Kg		89	70 - 120
1,1-Dichloroethane	0.0500	0.0505		mg/Kg		101	70 - 120
1,2-Dichloroethane	0.0500	0.0475		mg/Kg		95	70 - 128
1,1-Dichloroethene	0.0500	0.0460		mg/Kg		92	67 - 120
1,2-Dichloropropane	0.0500	0.0481		mg/Kg		96	70 - 120
Ethylbenzene	0.0500	0.0499		mg/Kg		100	70 - 120
Methylene Chloride	0.0500	0.0472		mg/Kg		94	70 - 120
Methyl tert-butyl ether	0.0500	0.0452		mg/Kg		90	70 - 120
Styrene	0.0500	0.0479		mg/Kg		96	70 - 120
Tetrachloroethene	0.0500	0.0524		mg/Kg		105	70 - 120
Toluene	0.0500	0.0519		mg/Kg		104	70 - 120
2-Butanone (MEK)	0.0500	0.0482		mg/Kg		96	50 - 148
trans-1,2-Dichloroethene	0.0500	0.0466		mg/Kg		93	70 - 120
1,1,1-Trichloroethane	0.0500	0.0522		mg/Kg		104	70 - 120
1,1,2-Trichloroethane	0.0500	0.0462		mg/Kg		92	70 - 120
Trichloroethene	0.0500	0.0475		mg/Kg		95	70 - 120
Vinyl acetate	0.0500	0.0729		mg/Kg		146	60 - 150
Vinyl chloride	0.0500	0.0536		mg/Kg		107	69 - 120
Xylenes, Total	0.100	0.108		mg/Kg		108	70 - 120

Surrogate	*LCS %Recovery*	*LCS Qualifier*	*Limits*
4-Bromofluorobenzene (Surr)	*121*		*70 - 122*
Dibromofluoromethane	*97*		*75 - 120*
1,2-Dichloroethane-d4 (Surr)	*103*		*70 - 134*
Toluene-d8 (Surr)	*118*		*75 - 122*

Method: 8270D - Semivolatile Organic Compounds (GC/MS)

Lab Sample ID: MB 500-301700/1-A
Matrix: Solid
Analysis Batch: 302108

Client Sample ID: Method Blank
Prep Type: Total/NA
Prep Batch: 301700

Analyte	MB Result	MB Qualifier	RL	MDL	Unit	D	Prepared	Analyzed	Dil Fac
Acenaphthene	0.0060	U	0.033	0.0060	mg/Kg		08/26/15 07:31	08/28/15 14:25	1
Acenaphthylene	0.0044	U	0.033	0.0044	mg/Kg		08/26/15 07:31	08/28/15 14:25	1
Aldicarb	0.33	U	0.67	0.33	mg/Kg		08/26/15 07:31	08/28/15 14:25	1
Anthracene	0.0056	U	0.033	0.0056	mg/Kg		08/26/15 07:31	08/28/15 14:25	1
Benzo[a]anthracene	0.0045	U	0.033	0.0045	mg/Kg		08/26/15 07:31	08/28/15 14:25	1
Benzo[a]pyrene	0.0064	U	0.033	0.0064	mg/Kg		08/26/15 07:31	08/28/15 14:25	1
Benzo[b]fluoranthene	0.0072	U	0.033	0.0072	mg/Kg		08/26/15 07:31	08/28/15 14:25	1
Benzo[g,h,i]perylene	0.011	U	0.033	0.011	mg/Kg		08/26/15 07:31	08/28/15 14:25	1
Benzoic acid	0.33	U	1.7	0.33	mg/Kg		08/26/15 07:31	08/28/15 14:25	1
Benzo[k]fluoranthene	0.0098	U	0.033	0.0098	mg/Kg		08/26/15 07:31	08/28/15 14:25	1
Bis(2-chloroethyl)ether	0.050	U	0.17	0.050	mg/Kg		08/26/15 07:31	08/28/15 14:25	1
Bis(2-ethylhexyl) phthalate	0.061	U	0.17	0.061	mg/Kg		08/26/15 07:31	08/28/15 14:25	1
Butyl benzyl phthalate	0.063	U	0.17	0.063	mg/Kg		08/26/15 07:31	08/28/15 14:25	1
Carbazole	0.083	U	0.17	0.083	mg/Kg		08/26/15 07:31	08/28/15 14:25	1
Carbofuran	0.077	U	0.67	0.077	mg/Kg		08/26/15 07:31	08/28/15 14:25	1

Method: 8270D - Semivolatile Organic Compounds (GC/MS) (Continued)

Lab Sample ID: MB 500-301700/1-A
Matrix: Solid
Analysis Batch: 302108

Client Sample ID: Method Blank
Prep Type: Total/NA
Prep Batch: 301700

Analyte	MB Result	MB Qualifier	RL	MDL	Unit	D	Prepared	Analyzed	Dil Fac
4-Chloroaniline	0.16	U	0.67	0.16	mg/Kg		08/26/15 07:31	08/28/15 14:25	1
2-Chlorophenol	0.057	U	0.17	0.057	mg/Kg		08/26/15 07:31	08/28/15 14:25	1
Chrysene	0.0091	U	0.033	0.0091	mg/Kg		08/26/15 07:31	08/28/15 14:25	1
Dibenz(a,h)anthracene	0.0064	U	0.033	0.0064	mg/Kg		08/26/15 07:31	08/28/15 14:25	1
1,2-Dichlorobenzene	0.040	U	0.17	0.040	mg/Kg		08/26/15 07:31	08/28/15 14:25	1
1,4-Dichlorobenzene	0.043	U	0.17	0.043	mg/Kg		08/26/15 07:31	08/28/15 14:25	1
3,3'-Dichlorobenzidine	0.047	U	0.17	0.047	mg/Kg		08/26/15 07:31	08/28/15 14:25	1
2,4-Dichlorophenol	0.079	U	0.33	0.079	mg/Kg		08/26/15 07:31	08/28/15 14:25	1
Diethyl phthalate	0.056	U	0.17	0.056	mg/Kg		08/26/15 07:31	08/28/15 14:25	1
2,4-Dimethylphenol	0.13	U	0.33	0.13	mg/Kg		08/26/15 07:31	08/28/15 14:25	1
Di-n-butyl phthalate	0.051	U	0.17	0.051	mg/Kg		08/26/15 07:31	08/28/15 14:25	1
2,4-Dinitrophenol	0.59	U	0.67	0.59	mg/Kg		08/26/15 07:31	08/28/15 14:25	1
2,4-Dinitrotoluene	0.053	U	0.17	0.053	mg/Kg		08/26/15 07:31	08/28/15 14:25	1
2,6-Dinitrotoluene	0.065	U	0.17	0.065	mg/Kg		08/26/15 07:31	08/28/15 14:25	1
Di-n-octyl phthalate	0.054	U	0.17	0.054	mg/Kg		08/26/15 07:31	08/28/15 14:25	1
Fluoranthene	0.0062	U	0.033	0.0062	mg/Kg		08/26/15 07:31	08/28/15 14:25	1
Fluorene	0.0047	U	0.033	0.0047	mg/Kg		08/26/15 07:31	08/28/15 14:25	1
Hexachlorobenzene	0.0077	U	0.067	0.0077	mg/Kg		08/26/15 07:31	08/28/15 14:25	1
Hexachlorocyclopentadiene	0.19	U	0.67	0.19	mg/Kg		08/26/15 07:31	08/28/15 14:25	1
Hexachloroethane	0.051	U	0.17	0.051	mg/Kg		08/26/15 07:31	08/28/15 14:25	1
Indeno[1,2,3-cd]pyrene	0.0086	U	0.033	0.0086	mg/Kg		08/26/15 07:31	08/28/15 14:25	1
Isophorone	0.037	U	0.17	0.037	mg/Kg		08/26/15 07:31	08/28/15 14:25	1
2-Methylphenol	0.053	U	0.17	0.053	mg/Kg		08/26/15 07:31	08/28/15 14:25	1
Naphthalene	0.0051	U	0.033	0.0051	mg/Kg		08/26/15 07:31	08/28/15 14:25	1
Nitrobenzene	0.0083	U	0.033	0.0083	mg/Kg		08/26/15 07:31	08/28/15 14:25	1
4-Nitrophenol	0.32	U	0.67	0.32	mg/Kg		08/26/15 07:31	08/28/15 14:25	1
N-Nitrosodi-n-propylamine	0.041	U	0.17	0.041	mg/Kg		08/26/15 07:31	08/28/15 14:25	1
N-Nitrosodiphenylamine	0.039	U	0.17	0.039	mg/Kg		08/26/15 07:31	08/28/15 14:25	1
Phenanthrene	0.0046	U	0.033	0.0046	mg/Kg		08/26/15 07:31	08/28/15 14:25	1
Phenol	0.074	U	0.17	0.074	mg/Kg		08/26/15 07:31	08/28/15 14:25	1
Pyrene	0.0066	U	0.033	0.0066	mg/Kg		08/26/15 07:31	08/28/15 14:25	1
1,2,4-Trichlorobenzene	0.036	U	0.17	0.036	mg/Kg		08/26/15 07:31	08/28/15 14:25	1
2,4,5-Trichlorophenol	0.076	U	0.33	0.076	mg/Kg		08/26/15 07:31	08/28/15 14:25	1
2,4,6-Trichlorophenol	0.11	U	0.33	0.11	mg/Kg		08/26/15 07:31	08/28/15 14:25	1

Surrogate	*MB %Recovery*	*MB Qualifier*	*Limits*	*Prepared*	*Analyzed*	*Dil Fac*
2-Fluorobiphenyl	*95*		*25 - 119*	*08/26/15 07:31*	*08/28/15 14:25*	*1*
2-Fluorophenol	*83*		*25 - 110*	*08/26/15 07:31*	*08/28/15 14:25*	*1*
Nitrobenzene-d5	*97*		*25 - 115*	*08/26/15 07:31*	*08/28/15 14:25*	*1*
Phenol-d5	*83*		*31 - 110*	*08/26/15 07:31*	*08/28/15 14:25*	*1*
Terphenyl-d14	*93*		*36 - 134*	*08/26/15 07:31*	*08/28/15 14:25*	*1*
2,4,6-Tribromophenol	*85*		*35 - 137*	*08/26/15 07:31*	*08/28/15 14:25*	*1*

Method: 8270D - Semivolatile Organic Compounds (GC/MS) (Continued)

Lab Sample ID: LCS 500-301700/2-A
Matrix: Solid
Analysis Batch: 302108

Client Sample ID: Lab Control Sample
Prep Type: Total/NA
Prep Batch: 301700

Analyte	Spike Added	LCS Result	LCS Qualifier	Unit	D	%Rec	%Rec. Limits
Acenaphthene	1.33	1.18		mg/Kg		88	46 - 110
Acenaphthylene	1.33	1.19		mg/Kg		89	49 - 110
Anthracene	1.33	1.17		mg/Kg		87	48 - 118
Benzo[a]anthracene	1.33	1.29		mg/Kg		97	49 - 121
Benzo[a]pyrene	1.33	1.31		mg/Kg		98	53 - 122
Benzo[b]fluoranthene	1.33	1.33		mg/Kg		100	54 - 122
Benzo[g,h,i]perylene	1.33	1.34		mg/Kg		101	52 - 125
Benzoic acid	1.33	0.584	J	mg/Kg		44	10 - 100
Benzo[k]fluoranthene	1.33	1.16		mg/Kg		87	44 - 137
Bis(2-chloroethyl)ether	1.33	1.13		mg/Kg		85	32 - 110
Bis(2-ethylhexyl) phthalate	1.33	1.20		mg/Kg		90	47 - 133
Butyl benzyl phthalate	1.33	1.27		mg/Kg		95	49 - 121
Carbazole	1.33	1.38		mg/Kg		104	26 - 188
4-Chloroaniline	1.33	0.890		mg/Kg		67	16 - 118
2-Chlorophenol	1.33	1.26		mg/Kg		95	47 - 114
Chrysene	1.33	1.24		mg/Kg		93	45 - 118
Dibenz(a,h)anthracene	1.33	1.36		mg/Kg		102	48 - 134
1,2-Dichlorobenzene	1.33	1.11		mg/Kg		83	48 - 110
1,4-Dichlorobenzene	1.33	1.11		mg/Kg		83	45 - 110
3,3'-Dichlorobenzidine	1.33	1.25		mg/Kg		94	26 - 128
2,4-Dichlorophenol	1.33	1.38		mg/Kg		104	53 - 113
Diethyl phthalate	1.33	1.26		mg/Kg		95	50 - 128
2,4-Dimethylphenol	1.33	1.13		mg/Kg		85	49 - 110
Di-n-butyl phthalate	1.33	1.25		mg/Kg		94	50 - 128
2,4-Dinitrophenol	2.67	0.875		mg/Kg		33	10 - 110
2,4-Dinitrotoluene	1.33	1.26		mg/Kg		95	53 - 122
2,6-Dinitrotoluene	1.33	1.25		mg/Kg		94	54 - 117
Di-n-octyl phthalate	1.33	1.28		mg/Kg		96	46 - 138
Fluoranthene	1.33	1.28		mg/Kg		96	48 - 128
Fluorene	1.33	1.15		mg/Kg		86	47 - 121
Hexachlorobenzene	1.33	1.31		mg/Kg		99	54 - 114
Hexachlorocyclopentadiene	1.33	0.703		mg/Kg		53	10 - 110
Hexachloroethane	1.33	1.13		mg/Kg		85	44 - 110
Indeno[1,2,3-cd]pyrene	1.33	1.39		mg/Kg		104	49 - 132
Isophorone	1.33	1.18		mg/Kg		88	35 - 110
2-Methylphenol	1.33	1.11		mg/Kg		83	44 - 110
Naphthalene	1.33	1.18		mg/Kg		89	48 - 110
Nitrobenzene	1.33	1.27		mg/Kg		96	35 - 113
4-Nitrophenol	2.67	3.39		mg/Kg		127	10 - 157
N-Nitrosodi-n-propylamine	1.33	1.19		mg/Kg		89	24 - 123
N-Nitrosodiphenylamine	2.67	2.36		mg/Kg		89	52 - 111
Phenanthrene	1.33	1.16		mg/Kg		87	48 - 121
Phenol	1.33	1.14		mg/Kg		85	41 - 110
Pyrene	1.33	1.21		mg/Kg		91	46 - 114
1,2,4-Trichlorobenzene	1.33	1.30		mg/Kg		97	49 - 110
2,4,5-Trichlorophenol	1.33	1.31		mg/Kg		98	41 - 120
2,4,6-Trichlorophenol	1.33	1.23		mg/Kg		93	44 - 118

Method: 8270D - Semivolatile Organic Compounds (GC/MS) (Continued)

Lab Sample ID: LCS 500-301700/2-A
Matrix: Solid
Analysis Batch: 302108

Client Sample ID: Lab Control Sample
Prep Type: Total/NA
Prep Batch: 301700

Surrogate	*LCS %Recovery*	*LCS Qualifier*	*Limits*
2-Fluorobiphenyl	*86*		*25 - 119*
2-Fluorophenol	*89*		*25 - 110*
Nitrobenzene-d5	*98*		*25 - 115*
Phenol-d5	*85*		*31 - 110*
Terphenyl-d14	*99*		*36 - 134*
2,4,6-Tribromophenol	*100*		*35 - 137*

Method: 8081B - Organochlorine Pesticides (GC)

Lab Sample ID: MB 500-301630/1-A
Matrix: Solid
Analysis Batch: 301736

Client Sample ID: Method Blank
Prep Type: Total/NA
Prep Batch: 301630

Analyte	MB Result	MB Qualifier	RL	MDL	Unit	D	Prepared	Analyzed	Dil Fac
Alachlor	0.0059	U	0.017	0.0059	mg/Kg		08/25/15 16:47	08/26/15 12:10	1
Aldrin	0.00069	U	0.0017	0.00069	mg/Kg		08/25/15 16:47	08/26/15 12:10	1
alpha-BHC	0.00042	U	0.0017	0.00042	mg/Kg		08/25/15 16:47	08/26/15 12:10	1
Atrazine	0.035	U	0.17	0.035	mg/Kg		08/25/15 16:47	08/26/15 12:10	1
Chlordane (technical)	0.0033	U	0.0067	0.0033	mg/Kg		08/25/15 16:47	08/26/15 12:10	1
4,4'-DDD	0.00033	U	0.0017	0.00033	mg/Kg		08/25/15 16:47	08/26/15 12:10	1
4,4'-DDE	0.00028	U	0.0017	0.00028	mg/Kg		08/25/15 16:47	08/26/15 12:10	1
4,4'-DDT	0.00088	U	0.0017	0.00088	mg/Kg		08/25/15 16:47	08/26/15 12:10	1
Dieldrin	0.00023	U	0.0017	0.00023	mg/Kg		08/25/15 16:47	08/26/15 12:10	1
Endosulfan I	0.00073	U	0.0017	0.00073	mg/Kg		08/25/15 16:47	08/26/15 12:10	1
Endosulfan II	0.00027	U	0.0017	0.00027	mg/Kg		08/25/15 16:47	08/26/15 12:10	1
Endrin	0.00023	U	0.0017	0.00023	mg/Kg		08/25/15 16:47	08/26/15 12:10	1
gamma-BHC (Lindane)	0.00036	U	0.0017	0.00036	mg/Kg		08/25/15 16:47	08/26/15 12:10	1
Heptachlor	0.00070	U	0.0017	0.00070	mg/Kg		08/25/15 16:47	08/26/15 12:10	1
Heptachlor epoxide	0.00059	U	0.0017	0.00059	mg/Kg		08/25/15 16:47	08/26/15 12:10	1
Methoxychlor	0.00032	U	0.0083	0.00032	mg/Kg		08/25/15 16:47	08/26/15 12:10	1
Simazine	0.013	U	0.067	0.013	mg/Kg		08/25/15 16:47	08/26/15 12:10	1
Toxaphene	0.0070	U	0.017	0.0070	mg/Kg		08/25/15 16:47	08/26/15 12:10	1

Surrogate	*MB %Recovery*	*MB Qualifier*	*Limits*	*Prepared*	*Analyzed*	*Dil Fac*
DCB Decachlorobiphenyl	*98*		*56 - 128*	*08/25/15 16:47*	*08/26/15 12:10*	*1*
Tetrachloro-m-xylene	*86*		*45 - 112*	*08/25/15 16:47*	*08/26/15 12:10*	*1*

Lab Sample ID: LCS 500-301630/2-A
Matrix: Solid
Analysis Batch: 301736

Client Sample ID: Lab Control Sample
Prep Type: Total/NA
Prep Batch: 301630

Analyte	Spike Added	LCS Result	LCS Qualifier	Unit	D	%Rec	%Rec. Limits
Aldrin	0.0133	0.0128		mg/Kg		96	54 - 110
alpha-BHC	0.0133	0.0127		mg/Kg		95	53 - 110
4,4'-DDD	0.0133	0.0110		mg/Kg		83	66 - 110
4,4'-DDE	0.0133	0.0132		mg/Kg		99	64 - 110
4,4'-DDT	0.0133	0.0173	*	mg/Kg		129	50 - 115

Method: 8081B - Organochlorine Pesticides (GC) (Continued)

Lab Sample ID: LCS 500-301630/2-A — **Client Sample ID: Lab Control Sample**
Matrix: Solid — **Prep Type: Total/NA**
Analysis Batch: 301736 — **Prep Batch: 301630**

Analyte	Spike Added	LCS Result	LCS Qualifier	Unit	D	%Rec	%Rec. Limits
Dieldrin	0.0133	0.0136		mg/Kg		102	63 - 110
Endosulfan I	0.0133	0.00913		mg/Kg		68	51 - 110
Endosulfan II	0.0133	0.0154	*	mg/Kg		115	56 - 110
Endrin	0.0133	0.0139		mg/Kg		104	59 - 110
gamma-BHC (Lindane)	0.0133	0.0128		mg/Kg		96	55 - 110
Heptachlor	0.0133	0.0137		mg/Kg		103	50 - 110
Heptachlor epoxide	0.0133	0.0144		mg/Kg		108	50 - 122
Methoxychlor	0.0133	0.0143		mg/Kg		107	52 - 119

Surrogate	*LCS %Recovery*	*LCS Qualifier*	*Limits*
DCB Decachlorobiphenyl	*98*		*56 - 128*
Tetrachloro-m-xylene	*84*		*45 - 112*

Lab Sample ID: 500-100254-1 MS — **Client Sample ID: SB-3A 7-8'**
Matrix: Solid — **Prep Type: Total/NA**
Analysis Batch: 301736 — **Prep Batch: 301630**

Analyte	Sample Result	Sample Qualifier	Spike Added	MS Result	MS Qualifier	Unit	D	%Rec	%Rec. Limits
Aldrin	0.0075	U F1 F2	0.0150	0.0295	F1	mg/Kg	☼	196	54 - 110
alpha-BHC	0.0046	U	0.0150	0.0122	J	mg/Kg	☼	81	53 - 110
4,4'-DDD	0.0036	U	0.0150	0.0107	J	mg/Kg	☼	71	66 - 110
4,4'-DDE	0.0030	U F1 F2	0.0150	0.0185	J F1	mg/Kg	☼	123	64 - 110
4,4'-DDT	0.0095	U * F1	0.0150	0.0216	F1	mg/Kg	☼	143	50 - 115
Dieldrin	0.0025	U F1 F2	0.0150	0.0230	F1	mg/Kg	☼	153	63 - 110
Endosulfan I	0.0079	U F1	0.0150	0.00862	J	mg/Kg	☼	57	51 - 110
Endosulfan II	0.0029	U * F1	0.0150	0.0184	J F1	mg/Kg	☼	122	56 - 110
Endrin	0.0025	U	0.0150	0.0127	J	mg/Kg	☼	84	59 - 110
gamma-BHC (Lindane)	0.0039	U	0.0150	0.0129	J	mg/Kg	☼	86	55 - 110
Heptachlor	0.0076	U F1	0.0150	0.0079	U F1	mg/Kg	☼	0	50 - 110
Heptachlor epoxide	0.0064	U	0.0150	0.0175	J	mg/Kg	☼	116	50 - 122
Methoxychlor	0.0035	U	0.0150	0.0159	J	mg/Kg	☼	106	52 - 119

Surrogate	*MS %Recovery*	*MS Qualifier*	*Limits*
DCB Decachlorobiphenyl	*102*		*56 - 128*
Tetrachloro-m-xylene	*73*		*45 - 112*

Lab Sample ID: 500-100254-1 MSD — **Client Sample ID: SB-3A 7-8'**
Matrix: Solid — **Prep Type: Total/NA**
Analysis Batch: 301736 — **Prep Batch: 301630**

Analyte	Sample Result	Sample Qualifier	Spike Added	MSD Result	MSD Qualifier	Unit	D	%Rec	%Rec. Limits	RPD	RPD Limit
Aldrin	0.0075	U F1 F2	0.0143	0.0145	J F2	mg/Kg	☼	101	54 - 110	68	30
alpha-BHC	0.0046	U	0.0143	0.0108	J	mg/Kg	☼	76	53 - 110	12	30
4,4'-DDD	0.0036	U	0.0143	0.00938	J	mg/Kg	☼	66	66 - 110	13	30
4,4'-DDE	0.0030	U F1 F2	0.0143	0.0125	J F2	mg/Kg	☼	88	64 - 110	39	30
4,4'-DDT	0.0095	U * F1	0.0143	0.0174	J F1	mg/Kg	☼	122	50 - 115	21	30
Dieldrin	0.0025	U F1 F2	0.0143	0.0136	J F2	mg/Kg	☼	95	63 - 110	52	30
Endosulfan I	0.0079	U	0.0143	0.0078	U F1	mg/Kg	☼	0	51 - 110	NC	30

Method: 8081B - Organochlorine Pesticides (GC) (Continued)

Lab Sample ID: 500-100254-1 MSD
Matrix: Solid
Analysis Batch: 301736

Client Sample ID: SB-3A 7-8'
Prep Type: Total/NA
Prep Batch: 301630

Analyte	Sample Result	Sample Qualifier	Spike Added	MSD Result	MSD Qualifier	Unit	D	%Rec	%Rec. Limits	RPD	RPD Limit
Endosulfan II	0.0029	U * F1	0.0143	0.0144	J	mg/Kg	☼	100	56 - 110	24	30
Endrin	0.0025	U	0.0143	0.0113	J	mg/Kg	☼	79	59 - 110	11	30
gamma-BHC (Lindane)	0.0039	U	0.0143	0.0108	J	mg/Kg	☼	75	55 - 110	18	30
Heptachlor	0.0076	U F1	0.0143	0.0075	U F1	mg/Kg	☼	0	50 - 110	NC	30
Heptachlor epoxide	0.0064	U	0.0143	0.0148	J	mg/Kg	☼	103	50 - 122	17	30
Methoxychlor	0.0035	U	0.0143	0.0156	J	mg/Kg	☼	109	52 - 119	2	30

Surrogate	*MSD %Recovery*	*MSD Qualifier*	*Limits*
DCB Decachlorobiphenyl	*97*		*56 - 128*
Tetrachloro-m-xylene	*81*		*45 - 112*

Method: 8082A - Polychlorinated Biphenyls (PCBs) by Gas Chromatography

Lab Sample ID: MB 500-301630/1-A
Matrix: Solid
Analysis Batch: 301729

Client Sample ID: Method Blank
Prep Type: Total/NA
Prep Batch: 301630

Analyte	MB Result	MB Qualifier	RL	MDL	Unit	D	Prepared	Analyzed	Dil Fac
PCB-1016	0.0059	U	0.017	0.0059	mg/Kg		08/25/15 16:47	08/26/15 10:25	1
PCB-1221	0.0073	U	0.017	0.0073	mg/Kg		08/25/15 16:47	08/26/15 10:25	1
PCB-1232	0.0073	U	0.017	0.0073	mg/Kg		08/25/15 16:47	08/26/15 10:25	1
PCB-1242	0.0055	U	0.017	0.0055	mg/Kg		08/25/15 16:47	08/26/15 10:25	1
PCB-1248	0.0066	U	0.017	0.0066	mg/Kg		08/25/15 16:47	08/26/15 10:25	1
PCB-1254	0.0036	U	0.017	0.0036	mg/Kg		08/25/15 16:47	08/26/15 10:25	1
PCB-1260	0.0082	U	0.017	0.0082	mg/Kg		08/25/15 16:47	08/26/15 10:25	1
Polychlorinated biphenyls, Total	0.0032	U	0.017	0.0032	mg/Kg		08/25/15 16:47	08/26/15 10:25	1

Surrogate	*MB %Recovery*	*MB Qualifier*	*Limits*	*Prepared*	*Analyzed*	*Dil Fac*
Tetrachloro-m-xylene	*90*		*50 - 116*	*08/25/15 16:47*	*08/26/15 10:25*	*1*
DCB Decachlorobiphenyl	*101*		*48 - 142*	*08/25/15 16:47*	*08/26/15 10:25*	*1*

Lab Sample ID: LCS 500-301630/3-A
Matrix: Solid
Analysis Batch: 301729

Client Sample ID: Lab Control Sample
Prep Type: Total/NA
Prep Batch: 301630

Analyte	Spike Added	LCS Result	LCS Qualifier	Unit	D	%Rec	%Rec. Limits
PCB-1016	0.167	0.122		mg/Kg		73	59 - 110
PCB-1260	0.167	0.162		mg/Kg		97	69 - 120

Surrogate	*LCS %Recovery*	*LCS Qualifier*	*Limits*
Tetrachloro-m-xylene	*58*		*50 - 116*
DCB Decachlorobiphenyl	*103*		*48 - 142*

Method: 8082A - Polychlorinated Biphenyls (PCBs) by Gas Chromatography (Continued)

Lab Sample ID: 500-100254-1 MS — **Client Sample ID: SB-3A 7-8'**
Matrix: Solid — **Prep Type: Total/NA**
Analysis Batch: 301729 — **Prep Batch: 301630**

Analyte	Sample Result	Sample Qualifier	Spike Added	MS Result	MS Qualifier	Unit	D	%Rec	%Rec. Limits
PCB-1016	0.0064	U F1	0.184	0.291	E F1	mg/Kg	☼	158	59 - 110
PCB-1260	0.0088	U	0.184	0.185		mg/Kg	☼	101	69 - 120

Surrogate	*MS %Recovery*	*MS Qualifier*	*Limits*
Tetrachloro-m-xylene	*85*		*50 - 116*
DCB Decachlorobiphenyl	*106*		*48 - 142*

Lab Sample ID: 500-100254-1 MSD — **Client Sample ID: SB-3A 7-8'**
Matrix: Solid — **Prep Type: Total/NA**
Analysis Batch: 301729 — **Prep Batch: 301630**

Analyte	Sample Result	Sample Qualifier	Spike Added	MSD Result	MSD Qualifier	Unit	D	%Rec	%Rec. Limits	RPD	RPD Limit
PCB-1016	0.0064	U F1	0.187	0.258	E F1	mg/Kg	☼	138	59 - 110	12	30
PCB-1260	0.0088	U	0.187	0.186		mg/Kg	☼	100	69 - 120	1	30

Surrogate	*MSD %Recovery*	*MSD Qualifier*	*Limits*
Tetrachloro-m-xylene	*83*		*50 - 116*
DCB Decachlorobiphenyl	*103*		*48 - 142*

Method: 8151 - Herbicides

Lab Sample ID: MB 500-301623/1-A — **Client Sample ID: Method Blank**
Matrix: Solid — **Prep Type: Total/NA**
Analysis Batch: 301924 — **Prep Batch: 301623**

Analyte	MB Result	MB Qualifier	RL	MDL	Unit	D	Prepared	Analyzed	Dil Fac
2,4-D	0.094	U	0.33	0.094	mg/Kg		08/25/15 15:53	08/27/15 11:31	10
Dalapon	0.078	U	0.67	0.078	mg/Kg		08/25/15 15:53	08/27/15 11:31	10
Dinoseb	0.17	U	0.67	0.17	mg/Kg		08/25/15 15:53	08/27/15 11:31	10
Pentachlorophenol	0.061	U	0.17	0.061	mg/Kg		08/25/15 15:53	08/27/15 11:31	10
Picloram	0.069	U	0.17	0.069	mg/Kg		08/25/15 15:53	08/27/15 11:31	10
Silvex (2,4,5-TP)	0.085	U	0.33	0.085	mg/Kg		08/25/15 15:53	08/27/15 11:31	10

Surrogate	*MB %Recovery*	*MB Qualifier*	*Limits*	*Prepared*	*Analyzed*	*Dil Fac*
DCAA	*45*		*32 - 122*	*08/25/15 15:53*	*08/27/15 11:31*	*10*

Lab Sample ID: LCS 500-301623/2-A — **Client Sample ID: Lab Control Sample**
Matrix: Solid — **Prep Type: Total/NA**
Analysis Batch: 301924 — **Prep Batch: 301623**

Analyte	Spike Added	LCS Result	LCS Qualifier	Unit	D	%Rec	%Rec. Limits
2,4-D	1.34	0.564		mg/Kg		42	23 - 125
Dalapon	1.34	0.419	J	mg/Kg		31	30 - 110
Dinoseb	1.35	0.17	U	mg/Kg		12	10 - 110
Pentachlorophenol	1.34	0.805		mg/Kg		60	38 - 117
Picloram	1.34	0.952		mg/Kg		71	40 - 122
Silvex (2,4,5-TP)	1.34	0.662		mg/Kg		50	36 - 114

Surrogate	LCS %Recovery	LCS Qualifier	Limits
DCAA	52		32 - 122

Lab Sample ID: 500-100254-3 MS — **Client Sample ID: SB-5A 6-7'**
Matrix: Solid — **Prep Type: Total/NA**
Analysis Batch: 301924 — **Prep Batch: 301623**

Analyte	Sample Result	Sample Qualifier	Spike Added	MS Result	MS Qualifier	Unit	D	%Rec	%Rec. Limits
2,4-D	0.12	U	1.65	0.776		mg/Kg	☼	47	23 - 125
Dalapon	0.096	U	1.65	0.642	J	mg/Kg	☼	39	30 - 110
Dinoseb	0.21	U F1	1.67	0.21	U F1	mg/Kg	☼	0	10 - 110
Pentachlorophenol	0.075	U	1.65	0.906		mg/Kg	☼	55	38 - 117
Picloram	0.085	U	1.65	0.981		mg/Kg	☼	60	40 - 122
Silvex (2,4,5-TP)	0.11	U	1.65	0.820		mg/Kg	☼	50	36 - 114

Surrogate	MS %Recovery	MS Qualifier	Limits
DCAA	48		32 - 122

Lab Sample ID: 500-100254-3 MSD — **Client Sample ID: SB-5A 6-7'**
Matrix: Solid — **Prep Type: Total/NA**
Analysis Batch: 301924 — **Prep Batch: 301623**

Analyte	Sample Result	Sample Qualifier	Spike Added	MSD Result	MSD Qualifier	Unit	D	%Rec	%Rec. Limits	RPD	RPD Limit
2,4-D	0.12	U	1.61	0.840		mg/Kg	☼	52	23 - 125	8	30
Dalapon	0.096	U	1.61	0.578	J	mg/Kg	☼	36	30 - 110	11	30
Dinoseb	0.21	U F1	1.63	0.20	U F1	mg/Kg	☼	0	10 - 110	NC	30
Pentachlorophenol	0.075	U	1.62	1.13		mg/Kg	☼	70	38 - 117	22	30
Picloram	0.085	U	1.61	1.31		mg/Kg	☼	81	40 - 122	28	30
Silvex (2,4,5-TP)	0.11	U	1.61	1.00		mg/Kg	☼	62	36 - 114	20	30

Surrogate	MSD %Recovery	MSD Qualifier	Limits
DCAA	62		32 - 122

Method: 6010B - Total Metals

Lab Sample ID: MB 500-301666/1-A — **Client Sample ID: Method Blank**
Matrix: Solid — **Prep Type: Total/NA**
Analysis Batch: 301901 — **Prep Batch: 301666**

Analyte	MB Result	MB Qualifier	RL	MDL	Unit	D	Prepared	Analyzed	Dil Fac
Aluminum	4.9	U	20	4.9	mg/Kg		08/25/15 18:58	08/26/15 14:26	1
Antimony	0.42	U	2.0	0.42	mg/Kg		08/25/15 18:58	08/26/15 14:26	1
Arsenic	0.46	U	1.0	0.46	mg/Kg		08/25/15 18:58	08/26/15 14:26	1
Barium	0.18	U	1.0	0.18	mg/Kg		08/25/15 18:58	08/26/15 14:26	1
Beryllium	0.087	U	0.40	0.087	mg/Kg		08/25/15 18:58	08/26/15 14:26	1
Boron	0.70	U	5.0	0.70	mg/Kg		08/25/15 18:58	08/26/15 14:26	1
Cadmium	0.058	U	0.20	0.058	mg/Kg		08/25/15 18:58	08/26/15 14:26	1
Calcium	6.4	U	20	6.4	mg/Kg		08/25/15 18:58	08/26/15 14:26	1
Chromium	0.17	U	1.0	0.17	mg/Kg		08/25/15 18:58	08/26/15 14:26	1
Cobalt	0.11	U	0.50	0.11	mg/Kg		08/25/15 18:58	08/26/15 14:26	1
Copper	0.22	U	1.0	0.22	mg/Kg		08/25/15 18:58	08/26/15 14:26	1
Iron	7.7	U	20	7.7	mg/Kg		08/25/15 18:58	08/26/15 14:26	1
Lead	0.25	U	0.50	0.25	mg/Kg		08/25/15 18:58	08/26/15 14:26	1
Magnesium	4.1	U	10	4.1	mg/Kg		08/25/15 18:58	08/26/15 14:26	1

Method: 6010B - Total Metals (Continued)

Lab Sample ID: MB 500-301666/1-A
Matrix: Solid
Analysis Batch: 301901

Client Sample ID: Method Blank
Prep Type: Total/NA
Prep Batch: 301666

Analyte	MB Result	MB Qualifier	RL	MDL	Unit	D	Prepared	Analyzed	Dil Fac
Manganese	0.20	U	1.0	0.20	mg/Kg		08/25/15 18:58	08/26/15 14:26	1
Nickel	0.27	U	1.0	0.27	mg/Kg		08/25/15 18:58	08/26/15 14:26	1
Potassium	8.2	U	50	8.2	mg/Kg		08/25/15 18:58	08/26/15 14:26	1
Selenium	0.529	J	1.0	0.50	mg/Kg		08/25/15 18:58	08/26/15 14:26	1
Silver	0.12	U	0.50	0.12	mg/Kg		08/25/15 18:58	08/26/15 14:26	1
Sodium	13	U	100	13	mg/Kg		08/25/15 18:58	08/26/15 14:26	1
Strontium	0.062	U	0.50	0.062	mg/Kg		08/25/15 18:58	08/26/15 14:26	1
Vanadium	0.15	U	0.50	0.15	mg/Kg		08/25/15 18:58	08/26/15 14:26	1
Zinc	1.10	J	2.0	0.63	mg/Kg		08/25/15 18:58	08/26/15 14:26	1

Lab Sample ID: MB 500-301666/1-A
Matrix: Solid
Analysis Batch: 301988

Client Sample ID: Method Blank
Prep Type: Total/NA
Prep Batch: 301666

Analyte	MB Result	MB Qualifier	RL	MDL	Unit	D	Prepared	Analyzed	Dil Fac
Thallium	0.49	U	1.0	0.49	mg/Kg		08/25/15 18:58	08/27/15 13:24	1

Lab Sample ID: LCS 500-301666/2-A
Matrix: Solid
Analysis Batch: 301901

Client Sample ID: Lab Control Sample
Prep Type: Total/NA
Prep Batch: 301666

Analyte	Spike Added	LCS Result	LCS Qualifier	Unit	D	%Rec	%Rec. Limits
Aluminum	200	199		mg/Kg		100	80 - 120
Antimony	50.0	46.4		mg/Kg		93	80 - 120
Arsenic	10.0	9.81		mg/Kg		98	80 - 120
Barium	200	198		mg/Kg		99	80 - 120
Beryllium	5.00	5.04		mg/Kg		101	80 - 120
Boron	100	98.1		mg/Kg		98	80 - 120
Cadmium	5.00	4.93		mg/Kg		99	80 - 120
Calcium	1000	1010		mg/Kg		101	80 - 120
Chromium	20.0	20.5		mg/Kg		102	80 - 120
Cobalt	50.0	50.6		mg/Kg		101	80 - 120
Copper	25.0	25.3		mg/Kg		101	80 - 120
Iron	100	102		mg/Kg		102	80 - 120
Lead	10.0	10.2		mg/Kg		102	80 - 120
Magnesium	1000	1010		mg/Kg		101	80 - 120
Manganese	50.0	52.5		mg/Kg		105	80 - 120
Nickel	50.0	49.9		mg/Kg		100	80 - 120
Potassium	1000	983		mg/Kg		98	80 - 120
Selenium	10.0	9.56		mg/Kg		96	80 - 120
Silver	5.00	4.97		mg/Kg		99	80 - 120
Sodium	1000	1030		mg/Kg		103	80 - 120
Strontium	100	97.8		mg/Kg		98	80 - 120
Vanadium	50.0	51.8		mg/Kg		104	80 - 120
Zinc	50.0	51.0		mg/Kg		102	80 - 120

Method: 6010B - Total Metals (Continued)

Lab Sample ID: LCS 500-301666/2-A — **Client Sample ID: Lab Control Sample**
Matrix: Solid — **Prep Type: Total/NA**
Analysis Batch: 301988 — **Prep Batch: 301666**

Analyte	Spike Added	LCS Result	LCS Qualifier	Unit	D	%Rec	%Rec. Limits
Thallium	10.0	9.25		mg/Kg		93	80 - 120

Lab Sample ID: 500-100254-1 MS — **Client Sample ID: SB-3A 7-8'**
Matrix: Solid — **Prep Type: Total/NA**
Analysis Batch: 301901 — **Prep Batch: 301666**

Analyte	Sample Result	Sample Qualifier	Spike Added	MS Result	MS Qualifier	Unit	D	%Rec	%Rec. Limits
Aluminum	9100		106	13000	4	mg/Kg	☼	3656	75 - 125
Antimony	0.34	J F1	26.6	5.89	F1	mg/Kg	☼	21	75 - 125
Arsenic	5.7		5.32	10.1		mg/Kg	☼	82	75 - 125
Barium	42		106	144		mg/Kg	☼	96	75 - 125
Beryllium	0.55		2.66	3.02		mg/Kg	☼	93	75 - 125
Boron	12		53.2	63.8		mg/Kg	☼	98	75 - 125
Cadmium	0.20		2.66	2.31		mg/Kg	☼	79	75 - 125
Chromium	16		10.6	28.6		mg/Kg	☼	121	75 - 125
Cobalt	7.9		26.6	29.3		mg/Kg	☼	81	75 - 125
Copper	19		13.3	33.0		mg/Kg	☼	106	75 - 125
Iron	16000		53.2	16800	4	mg/Kg	☼	1798	75 - 125
Lead	8.2		5.32	14.9		mg/Kg	☼	125	75 - 125
Magnesium	32000		532	29900	4	mg/Kg	☼	-322	75 - 125
Manganese	440		26.6	443	4	mg/Kg	☼	24	75 - 125
Nickel	19		26.6	40.9		mg/Kg	☼	81	75 - 125
Potassium	3200		532	5190	4	mg/Kg	☼	383	75 - 125
Selenium	0.26	U	5.32	4.09		mg/Kg	☼	77	75 - 125
Silver	0.061	U	2.66	2.52		mg/Kg	☼	95	75 - 125
Sodium	230	F1	532	919	F1	mg/Kg	☼	129	75 - 125
Strontium	54		53.2	97.9		mg/Kg	☼	83	75 - 125
Vanadium	19		26.6	49.3		mg/Kg	☼	115	75 - 125
Zinc	37	B	26.6	69.1		mg/Kg	☼	119	75 - 125

Lab Sample ID: 500-100254-1 MS — **Client Sample ID: SB-3A 7-8'**
Matrix: Solid — **Prep Type: Total/NA**
Analysis Batch: 301988 — **Prep Batch: 301666**

Analyte	Sample Result	Sample Qualifier	Spike Added	MS Result	MS Qualifier	Unit	D	%Rec	%Rec. Limits
Thallium	0.26	U	5.32	4.75		mg/Kg	☼	89	75 - 125

Lab Sample ID: 500-100254-1 MS — **Client Sample ID: SB-3A 7-8'**
Matrix: Solid — **Prep Type: Total/NA**
Analysis Batch: 301988 — **Prep Batch: 301666**

Analyte	Sample Result	Sample Qualifier	Spike Added	MS Result	MS Qualifier	Unit	D	%Rec	%Rec. Limits
Calcium	42000		532	32000	4	mg/Kg	☼	-1973	75 - 125

Method: 6010B - Total Metals (Continued)

Lab Sample ID: 500-100254-1 MSD — **Client Sample ID: SB-3A 7-8'**
Matrix: Solid — **Prep Type: Total/NA**
Analysis Batch: 301901 — **Prep Batch: 301666**

Analyte	Sample Result	Sample Qualifier	Spike Added	MSD Result	MSD Qualifier	Unit	D	%Rec	%Rec. Limits	RPD	RPD Limit
Aluminum	9100		113	12100	4	mg/Kg	☼	2706	75 - 125	7	20
Antimony	0.34	J F1	28.2	6.15	F1	mg/Kg	☼	21	75 - 125	4	20
Arsenic	5.7		5.64	12.1		mg/Kg	☼	113	75 - 125	18	20
Barium	42		113	150		mg/Kg	☼	95	75 - 125	4	20
Beryllium	0.55		2.82	3.21		mg/Kg	☼	94	75 - 125	6	20
Boron	12		56.4	68.5		mg/Kg	☼	100	75 - 125	7	20
Cadmium	0.20		2.82	2.48		mg/Kg	☼	81	75 - 125	7	20
Chromium	16		11.3	28.7		mg/Kg	☼	115	75 - 125	0	20
Cobalt	7.9		28.2	30.7		mg/Kg	☼	81	75 - 125	5	20
Copper	19		14.1	33.7		mg/Kg	☼	105	75 - 125	2	20
Iron	16000		56.4	17900	4	mg/Kg	☼	3620	75 - 125	6	20
Lead	8.2		5.64	14.8		mg/Kg	☼	116	75 - 125	1	20
Magnesium	32000		564	34900	4	mg/Kg	☼	587	75 - 125	16	20
Manganese	440		28.2	498	4	mg/Kg	☼	219	75 - 125	12	20
Nickel	19		28.2	42.6		mg/Kg	☼	82	75 - 125	4	20
Potassium	3200		564	5350	4	mg/Kg	☼	390	75 - 125	3	20
Selenium	0.26	U	5.64	4.51		mg/Kg	☼	80	75 - 125	10	20
Silver	0.061	U	2.82	2.76		mg/Kg	☼	98	75 - 125	9	20
Sodium	230	F1	564	1000	F1	mg/Kg	☼	136	75 - 125	9	20
Strontium	54		56.4	105		mg/Kg	☼	92	75 - 125	7	20
Vanadium	19		28.2	49.8		mg/Kg	☼	110	75 - 125	1	20
Zinc	37	B	28.2	62.7		mg/Kg	☼	89	75 - 125	10	20

Lab Sample ID: 500-100254-1 MSD — **Client Sample ID: SB-3A 7-8'**
Matrix: Solid — **Prep Type: Total/NA**
Analysis Batch: 301988 — **Prep Batch: 301666**

Analyte	Sample Result	Sample Qualifier	Spike Added	MSD Result	MSD Qualifier	Unit	D	%Rec	%Rec. Limits	RPD	RPD Limit
Thallium	0.26	U	5.64	5.10		mg/Kg	☼	90	75 - 125	7	20

Lab Sample ID: 500-100254-1 MSD — **Client Sample ID: SB-3A 7-8'**
Matrix: Solid — **Prep Type: Total/NA**
Analysis Batch: 301988 — **Prep Batch: 301666**

Analyte	Sample Result	Sample Qualifier	Spike Added	MSD Result	MSD Qualifier	Unit	D	%Rec	%Rec. Limits	RPD	RPD Limit
Calcium	42000		564	36500	4	mg/Kg	☼	-1053	75 - 125	13	20

Lab Sample ID: 500-100254-1 DU — **Client Sample ID: SB-3A 7-8'**
Matrix: Solid — **Prep Type: Total/NA**
Analysis Batch: 301901 — **Prep Batch: 301666**

Analyte	Sample Result	Sample Qualifier		DU Result	DU Qualifier	Unit	D			RPD	RPD Limit
Aluminum	9100			9880		mg/Kg	☼			9	20
Antimony	0.34	J F1		0.338	J	mg/Kg	☼			0.4	20
Arsenic	5.7			5.99		mg/Kg	☼			5	20
Barium	42			45.2		mg/Kg	☼			7	20
Beryllium	0.55			0.601		mg/Kg	☼			8	20
Boron	12			13.7		mg/Kg	☼			14	20
Cadmium	0.20			2.00	F3	mg/Kg	☼			163	20

Method: 6010B - Total Metals (Continued)

Lab Sample ID: 500-100254-1 DU — **Client Sample ID: SB-3A 7-8'**
Matrix: Solid — **Prep Type: Total/NA**
Analysis Batch: 301901 — **Prep Batch: 301666**

Analyte	Sample Result	Sample Qualifier		DU Result	DU Qualifier	Unit	D			RPD	RPD Limit
Chromium	16			16.8		mg/Kg	☼			7	20
Cobalt	7.9			8.53		mg/Kg	☼			8	20
Copper	19			20.3		mg/Kg	☼			7	20
Iron	16000			16800		mg/Kg	☼			6	20
Lead	8.2			8.97		mg/Kg	☼			8	20
Magnesium	32000			31500		mg/Kg	☼			0.2	20
Manganese	440			448		mg/Kg	☼			3	20
Nickel	19			20.9		mg/Kg	☼			7	20
Potassium	3200			3570		mg/Kg	☼			12	20
Selenium	0.26	U		0.28	U	mg/Kg	☼			NC	20
Silver	0.061	U		0.066	U	mg/Kg	☼			NC	20
Sodium	230	F1		238		mg/Kg	☼			1	20
Strontium	54			53.0		mg/Kg	☼			1	20
Vanadium	19			20.3		mg/Kg	☼			8	20
Zinc	37	B		428	F3	mg/Kg	☼			168	20

Lab Sample ID: 500-100254-1 DU — **Client Sample ID: SB-3A 7-8'**
Matrix: Solid — **Prep Type: Total/NA**
Analysis Batch: 301988 — **Prep Batch: 301666**

Analyte	Sample Result	Sample Qualifier		DU Result	DU Qualifier	Unit	D			RPD	RPD Limit
Thallium	0.26	U		0.373	J	mg/Kg	☼			NC	20

Lab Sample ID: 500-100254-1 DU — **Client Sample ID: SB-3A 7-8'**
Matrix: Solid — **Prep Type: Total/NA**
Analysis Batch: 301988 — **Prep Batch: 301666**

Analyte	Sample Result	Sample Qualifier		DU Result	DU Qualifier	Unit	D			RPD	RPD Limit
Calcium	42000			36500		mg/Kg	☼			15	20

Method: 7471B - Mercury (CVAA)

Lab Sample ID: MB 500-301825/12-A — **Client Sample ID: Method Blank**
Matrix: Solid — **Prep Type: Total/NA**
Analysis Batch: 301967 — **Prep Batch: 301825**

Analyte	MB Result	MB Qualifier	RL	MDL	Unit	D	Prepared	Analyzed	Dil Fac
Mercury	0.0058	U	0.017	0.0058	mg/Kg		08/26/15 19:00	08/27/15 09:42	1

Lab Sample ID: LCS 500-301825/13-A — **Client Sample ID: Lab Control Sample**
Matrix: Solid — **Prep Type: Total/NA**
Analysis Batch: 301967 — **Prep Batch: 301825**

Analyte			Spike Added	LCS Result	LCS Qualifier	Unit	D	%Rec	%Rec. Limits		
Mercury			0.167	0.154		mg/Kg		93	80 - 120		

Method: 7196A - Chromium, Hexavalent

Lab Sample ID: MB 500-301792/1-A — **Client Sample ID: Method Blank**
Matrix: Solid — **Prep Type: Total/NA**
Analysis Batch: 301979 — **Prep Batch: 301792**

Analyte	MB Result	MB Qualifier	RL	MDL	Unit	D	Prepared	Analyzed	Dil Fac
Chromium, hexavalent	0.46	U	1.0	0.46	mg/Kg		08/26/15 15:35	08/27/15 14:10	1

Lab Sample ID: LCS 500-301792/2-A — **Client Sample ID: Lab Control Sample**
Matrix: Solid — **Prep Type: Total/NA**
Analysis Batch: 301979 — **Prep Batch: 301792**

Analyte	Spike Added	LCS Result	LCS Qualifier	Unit	D	%Rec	%Rec. Limits
Chromium, hexavalent	10.0	9.77		mg/Kg		98	80 - 120

Lab Sample ID: LCS 500-301792/3-A — **Client Sample ID: Lab Control Sample**
Matrix: Solid — **Prep Type: Total/NA**
Analysis Batch: 301979 — **Prep Batch: 301792**

Analyte	Spike Added	LCS Result	LCS Qualifier	Unit	D	%Rec	%Rec. Limits
Chromium, hexavalent	1210	1180		mg/Kg		98	80 - 120

Lab Sample ID: 500-100254-1 MS — **Client Sample ID: SB-3A 7-8'**
Matrix: Solid — **Prep Type: Total/NA**
Analysis Batch: 301979 — **Prep Batch: 301792**

Analyte	Sample Result	Sample Qualifier	Spike Added	MS Result	MS Qualifier	Unit	D	%Rec	%Rec. Limits
Chromium, hexavalent	0.51	U F1	45.3	28.7	F1	mg/Kg	☼	63	75 - 125
Chromium, hexavalent	0.51	U F1	1050	939		mg/Kg	☼	90	75 - 125

Lab Sample ID: 500-100254-1 MSD — **Client Sample ID: SB-3A 7-8'**
Matrix: Solid — **Prep Type: Total/NA**
Analysis Batch: 301979 — **Prep Batch: 301792**

Analyte	Sample Result	Sample Qualifier	Spike Added	MSD Result	MSD Qualifier	Unit	D	%Rec	%Rec. Limits	RPD	RPD Limit
Chromium, hexavalent	0.51	U F1	45.3	33.4	F1	mg/Kg	☼	74	75 - 125	15	30
Chromium, hexavalent	0.51	U F1	1030	880		mg/Kg	☼	86	75 - 125	6	30

Method: 9014 - Cyanide

Lab Sample ID: MB 500-301850/1-A — **Client Sample ID: Method Blank**
Matrix: Solid — **Prep Type: Total/NA**
Analysis Batch: 301932 — **Prep Batch: 301850**

Analyte	MB Result	MB Qualifier	RL	MDL	Unit	D	Prepared	Analyzed	Dil Fac
Cyanide, Total	0.17	U	0.50	0.17	mg/Kg		08/26/15 19:50	08/26/15 23:05	1

Lab Sample ID: LCS 500-301850/2-A — **Client Sample ID: Lab Control Sample**
Matrix: Solid — **Prep Type: Total/NA**
Analysis Batch: 301932 — **Prep Batch: 301850**

Analyte	Spike Added	LCS Result	LCS Qualifier	Unit	D	%Rec	%Rec. Limits
Cyanide, Total	5.00	5.45		mg/Kg		109	80 - 120

Method: 9045D - pH

Lab Sample ID: 500-100254-4 DU — **Client Sample ID: SB-1A 6-7'**
Matrix: Solid — **Prep Type: Total/NA**
Analysis Batch: 301621

Analyte	Sample Result	Sample Qualifier	DU Result	DU Qualifier	Unit	D	RPD	RPD Limit
pH	8.47		8.450		SU		0.2	

Method: 9056A - Anions, Ion Chromatography

Lab Sample ID: MB 500-301361/1-A — **Client Sample ID: Method Blank**
Matrix: Solid — **Prep Type: Total/NA**
Analysis Batch: 301403 — **Prep Batch: 301361**

Analyte	MB Result	MB Qualifier	RL	MDL	Unit	D	Prepared	Analyzed	Dil Fac
Chloride	0.76	U	2.0	0.76	mg/Kg		08/24/15 09:17	08/24/15 11:35	1
Fluoride	0.61	U	2.0	0.61	mg/Kg		08/24/15 09:17	08/24/15 11:35	1
Nitrate as N	0.46	U	2.0	0.46	mg/Kg		08/24/15 09:17	08/24/15 11:35	1
Sulfate	1.3	U	2.0	1.3	mg/Kg		08/24/15 09:17	08/24/15 11:35	1

Lab Sample ID: MB 500-301361/1-A — **Client Sample ID: Method Blank**
Matrix: Solid — **Prep Type: Total/NA**
Analysis Batch: 301734 — **Prep Batch: 301361**

Analyte	MB Result	MB Qualifier	RL	MDL	Unit	D	Prepared	Analyzed	Dil Fac
Chloride	0.76	U	2.0	0.76	mg/Kg		08/24/15 09:17	08/25/15 17:57	1
Sulfate	1.3	U	2.0	1.3	mg/Kg		08/24/15 09:17	08/25/15 17:57	1

Lab Sample ID: LCS 500-301361/2-A — **Client Sample ID: Lab Control Sample**
Matrix: Solid — **Prep Type: Total/NA**
Analysis Batch: 301403 — **Prep Batch: 301361**

Analyte	Spike Added	LCS Result	LCS Qualifier	Unit	D	%Rec	%Rec. Limits
Chloride	30.0	29.5		mg/Kg		98	80 - 120
Fluoride	10.0	11.0		mg/Kg		110	80 - 120
Nitrate as N	20.0	20.8		mg/Kg		104	80 - 120
Sulfate	50.0	50.9		mg/Kg		102	80 - 120

Lab Sample ID: LCS 500-301361/2-A — **Client Sample ID: Lab Control Sample**
Matrix: Solid — **Prep Type: Total/NA**
Analysis Batch: 301734 — **Prep Batch: 301361**

Analyte	Spike Added	LCS Result	LCS Qualifier	Unit	D	%Rec	%Rec. Limits
Chloride	30.0	30.2		mg/Kg		101	80 - 120
Sulfate	50.0	52.6		mg/Kg		105	80 - 120

Method: SM 4500 P E - Phosphorus

Lab Sample ID: MB 500-301750/1-A — **Client Sample ID: Method Blank**
Matrix: Solid — **Prep Type: Total/NA**
Analysis Batch: 301929 — **Prep Batch: 301750**

Analyte	MB Result	MB Qualifier	RL	MDL	Unit	D	Prepared	Analyzed	Dil Fac
Phosphorus as P	1.5	U	10	1.5	mg/Kg		08/26/15 11:09	08/27/15 10:14	1

Method: SM 4500 P E - Phosphorus (Continued)

Lab Sample ID: LCS 500-301750/2-A
Matrix: Solid
Analysis Batch: 301929

Client Sample ID: Lab Control Sample
Prep Type: Total/NA
Prep Batch: 301750

Analyte			Spike Added	LCS Result	LCS Qualifier	Unit	D	%Rec	%Rec. Limits		
Phosphorus as P			50.0	44.0		mg/Kg		88	80 - 120		

Lab Sample ID: 500-100254-1 MS
Matrix: Solid
Analysis Batch: 301929

Client Sample ID: SB-3A 7-8'
Prep Type: Total/NA
Prep Batch: 301750

Analyte	Sample Result	Sample Qualifier	Spike Added	MS Result	MS Qualifier	Unit	D	%Rec	%Rec. Limits		
Phosphorus as P	250	F1	1710	290	F1	mg/Kg	☼	2	75 - 125		

Lab Sample ID: 500-100254-1 MSD
Matrix: Solid
Analysis Batch: 301929

Client Sample ID: SB-3A 7-8'
Prep Type: Total/NA
Prep Batch: 301750

Analyte	Sample Result	Sample Qualifier	Spike Added	MSD Result	MSD Qualifier	Unit	D	%Rec	%Rec. Limits	RPD	RPD Limit
Phosphorus as P	250	F1	1920	353	F1	mg/Kg	☼	5	75 - 125	20	20

Lab Chronicle

Client: Civil & Environmental Consultants Inc
Project/Site: CCDD - Yeoman Creek

TestAmerica Job ID: 500-100254-1

Client Sample ID: SB-3A 7-8'

Lab Sample ID: 500-100254-1
Date Collected: 08/21/15 10:30
Matrix: Solid
Date Received: 08/21/15 15:15

Prep Type	Batch Type	Batch Method	Run	Dilution Factor	Batch Number	Prepared or Analyzed	Analyst	Lab
Total/NA	Analysis	9045D		1	301621		SMO	TAL CHI
					(Start)	08/25/15 14:36		
					(End)	08/25/15 14:39		
Total/NA	Analysis	Moisture		1	301397	08/24/15 13:04	LWN	TAL CHI

Client Sample ID: SB-3A 7-8'

Lab Sample ID: 500-100254-1
Date Collected: 08/21/15 10:30
Matrix: Solid
Date Received: 08/21/15 15:15
Percent Solids: 87.9

Prep Type	Batch Type	Batch Method	Run	Dilution Factor	Batch Number	Prepared or Analyzed	Analyst	Lab
Total/NA	Prep	5035			301303	08/21/15 16:10	WRE	TAL CHI
Total/NA	Analysis	8260B		1	301819	08/27/15 06:40	EMA	TAL CHI
Total/NA	Prep	3541			301700	08/26/15 07:31	STW	TAL CHI
Total/NA	Analysis	8270D		1	302108	08/28/15 15:24	TNW	TAL CHI
Total/NA	Prep	3541			301630	08/25/15 16:47	DEA	TAL CHI
Total/NA	Analysis	8081B		10	301736	08/26/15 12:49	PJG	TAL CHI
Total/NA	Prep	3541			301630	08/25/15 16:47	DEA	TAL CHI
Total/NA	Analysis	8082A		1	301729	08/26/15 16:54	RLL	TAL CHI
Total/NA	Prep	8151A			301623	08/25/15 15:53	JP1	TAL CHI
Total/NA	Analysis	8151		10	301924	08/27/15 17:15	SAW	TAL CHI
Total/NA	Prep	3050B			301666	08/25/15 18:58	PJH	TAL CHI
Total/NA	Analysis	6010B		1	301901	08/26/15 14:40	PJ1	TAL CHI
Total/NA	Prep	3050B			301666	08/25/15 18:58	PJH	TAL CHI
Total/NA	Analysis	6010B		1	301988	08/27/15 13:32	PJ1	TAL CHI
Total/NA	Prep	3050B			301666	08/25/15 18:58	PJH	TAL CHI
Total/NA	Analysis	6010B		5	301988	08/27/15 14:05	PJ1	TAL CHI
Total/NA	Prep	7471B			301825	08/26/15 19:00	MJD	TAL CHI
Total/NA	Analysis	7471B		1	301967	08/27/15 10:20	MJD	TAL CHI
Total/NA	Prep	3060A			301792	08/26/15 15:35	ELR	TAL CHI
Total/NA	Analysis	7196A		1	301979		ELR	TAL CHI
					(Start)	08/27/15 14:18		
					(End)	08/27/15 14:19		
Total/NA	Prep	9010B			301850	08/26/15 19:50	ELR	TAL CHI
Total/NA	Analysis	9014		1	301932		ELR	TAL CHI
					(Start)	08/26/15 23:07		
					(End)	08/26/15 23:08		
Total/NA	Prep	300_Prep			301361	08/24/15 09:49	EAT	TAL CHI
Total/NA	Analysis	9056A		1	301403	08/24/15 18:07	EAT	TAL CHI
Total/NA	Prep	300_Prep			301361	08/24/15 09:49	EAT	TAL CHI
Total/NA	Analysis	9056A		5	301734	08/25/15 18:47	EAT	TAL CHI
Total/NA	Prep	SM 4500 P B			301750	08/26/15 11:09	CRB	TAL CHI
Total/NA	Analysis	SM 4500 P E		2	301929		JBJ	TAL CHI
					(Start)	08/27/15 10:15		
					(End)	08/27/15 10:15		

Lab Chronicle

Client: Civil & Environmental Consultants Inc
Project/Site: CCDD - Yeoman Creek

TestAmerica Job ID: 500-100254-1

Client Sample ID: SB-4A 6-7'

Lab Sample ID: 500-100254-2
Date Collected: 08/21/15 13:00
Matrix: Solid
Date Received: 08/21/15 15:15

Prep Type	Batch Type	Batch Method	Run	Dilution Factor	Batch Number	Prepared or Analyzed	Analyst	Lab
Total/NA	Analysis	9045D		1	301621		SMO	TAL CHI
					(Start)	08/25/15 14:39		
					(End)	08/25/15 14:42		
Total/NA	Analysis	Moisture		1	301397	08/24/15 13:04	LWN	TAL CHI

Client Sample ID: SB-4A 6-7'

Lab Sample ID: 500-100254-2
Date Collected: 08/21/15 13:00
Matrix: Solid
Date Received: 08/21/15 15:15
Percent Solids: 83.3

Prep Type	Batch Type	Batch Method	Run	Dilution Factor	Batch Number	Prepared or Analyzed	Analyst	Lab
Total/NA	Prep	5035			301303	08/21/15 16:10	WRE	TAL CHI
Total/NA	Analysis	8260B		1	301819	08/27/15 07:08	EMA	TAL CHI
Total/NA	Prep	3541			301700	08/26/15 07:31	STW	TAL CHI
Total/NA	Analysis	8270D		1	302108	08/28/15 15:53	TNW	TAL CHI
Total/NA	Prep	3541			301630	08/25/15 16:47	DEA	TAL CHI
Total/NA	Analysis	8081B		20	301736	08/27/15 10:53	PJG	TAL CHI
Total/NA	Prep	3541			301630	08/25/15 16:47	DEA	TAL CHI
Total/NA	Analysis	8082A		1	301729	08/26/15 17:41	RLL	TAL CHI
Total/NA	Prep	8151A			301623	08/25/15 15:53	JP1	TAL CHI
Total/NA	Analysis	8151		10	301924	08/27/15 17:40	SAW	TAL CHI
Total/NA	Prep	3050B			301666	08/25/15 18:58	PJH	TAL CHI
Total/NA	Analysis	6010B		1	301901	08/26/15 15:13	PJ1	TAL CHI
Total/NA	Prep	3050B			301666	08/25/15 18:58	PJH	TAL CHI
Total/NA	Analysis	6010B		1	301988	08/27/15 14:25	PJ1	TAL CHI
Total/NA	Prep	7471B			301825	08/26/15 19:00	MJD	TAL CHI
Total/NA	Analysis	7471B		1	301967	08/27/15 10:22	MJD	TAL CHI
Total/NA	Prep	3060A			301792	08/26/15 15:35	ELR	TAL CHI
Total/NA	Analysis	7196A		1	301979		ELR	TAL CHI
					(Start)	08/27/15 14:22		
					(End)	08/27/15 14:22		
Total/NA	Prep	9010B			301850	08/26/15 19:50	ELR	TAL CHI
Total/NA	Analysis	9014		1	301932		ELR	TAL CHI
					(Start)	08/26/15 23:08		
					(End)	08/26/15 23:08		
Total/NA	Prep	300_Prep			301361	08/24/15 09:49	EAT	TAL CHI
Total/NA	Analysis	9056A		1	301403	08/24/15 18:19	EAT	TAL CHI
Total/NA	Prep	300_Prep			301361	08/24/15 09:49	EAT	TAL CHI
Total/NA	Analysis	9056A		5	301734	08/25/15 19:00	EAT	TAL CHI
Total/NA	Prep	SM 4500 P B			301750	08/26/15 11:09	CRB	TAL CHI
Total/NA	Analysis	SM 4500 P E		2	301929		JBJ	TAL CHI
					(Start)	08/27/15 10:16		
					(End)	08/27/15 10:17		

Lab Chronicle

Client: Civil & Environmental Consultants Inc
Project/Site: CCDD - Yeoman Creek

TestAmerica Job ID: 500-100254-1

Client Sample ID: SB-5A 6-7'

Lab Sample ID: 500-100254-3
Date Collected: 08/21/15 09:49
Matrix: Solid
Date Received: 08/21/15 15:15

Prep Type	Batch Type	Batch Method	Run	Dilution Factor	Batch Number	Prepared or Analyzed	Analyst	Lab
Total/NA	Analysis	9045D		1	301621		SMO	TAL CHI
					(Start)	08/25/15 14:42		
					(End)	08/25/15 14:45		
Total/NA	Analysis	Moisture		1	301397	08/24/15 13:04	LWN	TAL CHI

Client Sample ID: SB-5A 6-7'

Lab Sample ID: 500-100254-3
Date Collected: 08/21/15 09:49
Matrix: Solid
Date Received: 08/21/15 15:15
Percent Solids: 80.5

Prep Type	Batch Type	Batch Method	Run	Dilution Factor	Batch Number	Prepared or Analyzed	Analyst	Lab
Total/NA	Prep	5035			301303	08/21/15 16:10	WRE	TAL CHI
Total/NA	Analysis	8260B		1	301819	08/27/15 07:36	EMA	TAL CHI
Total/NA	Prep	3541			301700	08/26/15 07:31	STW	TAL CHI
Total/NA	Analysis	8270D		1	302108	08/28/15 16:22	TNW	TAL CHI
Total/NA	Prep	3541			301630	08/25/15 16:47	DEA	TAL CHI
Total/NA	Analysis	8081B		20	301736	08/27/15 11:13	PJG	TAL CHI
Total/NA	Prep	3541			301630	08/25/15 16:47	DEA	TAL CHI
Total/NA	Analysis	8082A		1	301729	08/26/15 17:57	RLL	TAL CHI
Total/NA	Prep	8151A			301623	08/25/15 15:53	JP1	TAL CHI
Total/NA	Analysis	8151		10	301924	08/27/15 18:05	SAW	TAL CHI
Total/NA	Prep	3050B			301666	08/25/15 18:58	PJH	TAL CHI
Total/NA	Analysis	6010B		1	301901	08/26/15 15:20	PJ1	TAL CHI
Total/NA	Prep	3050B			301666	08/25/15 18:58	PJH	TAL CHI
Total/NA	Analysis	6010B		1	301988	08/27/15 14:30	PJ1	TAL CHI
Total/NA	Prep	7471B			301825	08/26/15 19:00	MJD	TAL CHI
Total/NA	Analysis	7471B		1	301967	08/27/15 10:24	MJD	TAL CHI
Total/NA	Prep	3060A			301792	08/26/15 15:35	ELR	TAL CHI
Total/NA	Analysis	7196A		1	301979		ELR	TAL CHI
					(Start)	08/27/15 14:22		
					(End)	08/27/15 14:23		
Total/NA	Prep	9010B			301850	08/26/15 19:50	ELR	TAL CHI
Total/NA	Analysis	9014		1	301932		ELR	TAL CHI
					(Start)	08/26/15 23:08		
					(End)	08/26/15 23:09		
Total/NA	Prep	300_Prep			301361	08/24/15 09:49	EAT	TAL CHI
Total/NA	Analysis	9056A		1	301403	08/24/15 18:32	EAT	TAL CHI
Total/NA	Prep	300_Prep			301361	08/24/15 09:49	EAT	TAL CHI
Total/NA	Analysis	9056A		10	301734	08/25/15 19:13	EAT	TAL CHI
Total/NA	Prep	SM 4500 P B			301750	08/26/15 11:09	CRB	TAL CHI
Total/NA	Analysis	SM 4500 P E		2	301929		JBJ	TAL CHI
					(Start)	08/27/15 10:17		
					(End)	08/27/15 10:17		

Lab Chronicle

Client: Civil & Environmental Consultants Inc
Project/Site: CCDD - Yeoman Creek

TestAmerica Job ID: 500-100254-1

Client Sample ID: SB-1A 6-7'

Lab Sample ID: 500-100254-4
Date Collected: 08/21/15 09:00
Matrix: Solid
Date Received: 08/21/15 15:15

Prep Type	Batch Type	Batch Method	Run	Dilution Factor	Batch Number	Prepared or Analyzed	Analyst	Lab
Total/NA	Analysis	9045D		1	301621		SMO	TAL CHI
					(Start)	08/25/15 14:45		
					(End)	08/25/15 14:48		
Total/NA	Analysis	Moisture		1	301397	08/24/15 13:04	LWN	TAL CHI

Client Sample ID: SB-1A 6-7'

Lab Sample ID: 500-100254-4
Date Collected: 08/21/15 09:00
Matrix: Solid
Date Received: 08/21/15 15:15
Percent Solids: 86.8

Prep Type	Batch Type	Batch Method	Run	Dilution Factor	Batch Number	Prepared or Analyzed	Analyst	Lab
Total/NA	Prep	5035			301303	08/21/15 16:10	WRE	TAL CHI
Total/NA	Analysis	8260B		1	301884	08/27/15 10:30	JMP	TAL CHI
Total/NA	Prep	3541			301700	08/26/15 07:31	STW	TAL CHI
Total/NA	Analysis	8270D		1	302108	08/28/15 16:52	TNW	TAL CHI
Total/NA	Prep	3541			301630	08/25/15 16:47	DEA	TAL CHI
Total/NA	Analysis	8081B		10	301736	08/26/15 14:47	PJG	TAL CHI
Total/NA	Prep	3541			301630	08/25/15 16:47	DEA	TAL CHI
Total/NA	Analysis	8082A		1	301729	08/26/15 12:14	RLL	TAL CHI
Total/NA	Prep	8151A			301623	08/25/15 15:53	JP1	TAL CHI
Total/NA	Analysis	8151		10	301924	08/27/15 19:18	SAW	TAL CHI
Total/NA	Prep	3050B			301666	08/25/15 18:58	PJH	TAL CHI
Total/NA	Analysis	6010B		1	301901	08/26/15 15:43	PJ1	TAL CHI
Total/NA	Prep	3050B			301666	08/25/15 18:58	PJH	TAL CHI
Total/NA	Analysis	6010B		1	301988	08/27/15 14:34	PJ1	TAL CHI
Total/NA	Prep	3050B			301666	08/25/15 18:58	PJH	TAL CHI
Total/NA	Analysis	6010B		10	301988	08/27/15 14:39	PJ1	TAL CHI
Total/NA	Prep	7471B			301825	08/26/15 19:00	MJD	TAL CHI
Total/NA	Analysis	7471B		1	301967	08/27/15 10:26	MJD	TAL CHI
Total/NA	Prep	3060A			301792	08/26/15 15:35	ELR	TAL CHI
Total/NA	Analysis	7196A		1	301979		ELR	TAL CHI
					(Start)	08/27/15 14:23		
					(End)	08/27/15 14:23		
Total/NA	Prep	9010B			301850	08/26/15 19:50	ELR	TAL CHI
Total/NA	Analysis	9014		1	301932		ELR	TAL CHI
					(Start)	08/26/15 23:09		
					(End)	08/26/15 23:09		
Total/NA	Prep	300_Prep			301361	08/24/15 09:49	EAT	TAL CHI
Total/NA	Analysis	9056A		1	301403	08/24/15 18:45	EAT	TAL CHI
Total/NA	Prep	300_Prep			301361	08/24/15 09:49	EAT	TAL CHI
Total/NA	Analysis	9056A		10	301734	08/25/15 19:25	EAT	TAL CHI
Total/NA	Prep	SM 4500 P B			301750	08/26/15 11:09	CRB	TAL CHI
Total/NA	Analysis	SM 4500 P E		2	301929		JBJ	TAL CHI
					(Start)	08/27/15 10:17		
					(End)	08/27/15 10:18		

Lab Chronicle

Client: Civil & Environmental Consultants Inc
Project/Site: CCDD - Yeoman Creek

TestAmerica Job ID: 500-100254-1

Client Sample ID: SB-2A 7-8'

Lab Sample ID: 500-100254-5
Date Collected: 08/21/15 08:54
Matrix: Solid
Date Received: 08/21/15 15:15

Prep Type	Batch Type	Batch Method	Run	Dilution Factor	Batch Number	Prepared or Analyzed	Analyst	Lab
Total/NA	Analysis	9045D		1	301621		SMO	TAL CHI
					(Start)	08/25/15 14:51		
					(End)	08/25/15 14:54		
Total/NA	Analysis	Moisture		1	301397	08/24/15 13:04	LWN	TAL CHI

Client Sample ID: SB-2A 7-8'

Lab Sample ID: 500-100254-5
Date Collected: 08/21/15 08:54
Matrix: Solid
Date Received: 08/21/15 15:15
Percent Solids: 88.3

Prep Type	Batch Type	Batch Method	Run	Dilution Factor	Batch Number	Prepared or Analyzed	Analyst	Lab
Total/NA	Prep	5035			301303	08/21/15 16:10	WRE	TAL CHI
Total/NA	Analysis	8260B		1	301884	08/27/15 10:56	JMP	TAL CHI
Total/NA	Prep	3541			301700	08/26/15 07:31	STW	TAL CHI
Total/NA	Analysis	8270D		1	302142	08/28/15 16:35	KDL	TAL CHI
Total/NA	Prep	3541			301630	08/25/15 16:47	DEA	TAL CHI
Total/NA	Analysis	8081B		10	301736	08/26/15 15:26	PJG	TAL CHI
Total/NA	Prep	3541			301630	08/25/15 16:47	DEA	TAL CHI
Total/NA	Analysis	8082A		1	301729	08/26/15 12:30	RLL	TAL CHI
Total/NA	Prep	8151A			301623	08/25/15 15:53	JP1	TAL CHI
Total/NA	Analysis	8151		10	301924	08/27/15 20:32	SAW	TAL CHI
Total/NA	Prep	3050B			301666	08/25/15 18:58	PJH	TAL CHI
Total/NA	Analysis	6010B		1	301901	08/26/15 15:50	PJ1	TAL CHI
Total/NA	Prep	3050B			301666	08/25/15 18:58	PJH	TAL CHI
Total/NA	Analysis	6010B		1	301988	08/27/15 14:43	PJ1	TAL CHI
Total/NA	Prep	3050B			301666	08/25/15 18:58	PJH	TAL CHI
Total/NA	Analysis	6010B		10	301988	08/27/15 14:56	PJ1	TAL CHI
Total/NA	Prep	7471B			301825	08/26/15 19:00	MJD	TAL CHI
Total/NA	Analysis	7471B		1	301967	08/27/15 10:28	MJD	TAL CHI
Total/NA	Prep	3060A			301792	08/26/15 15:35	ELR	TAL CHI
Total/NA	Analysis	7196A		1	301979		ELR	TAL CHI
					(Start)	08/27/15 14:23		
					(End)	08/27/15 14:24		
Total/NA	Prep	9010B			301850	08/26/15 19:50	ELR	TAL CHI
Total/NA	Analysis	9014		1	301932		ELR	TAL CHI
					(Start)	08/26/15 23:09		
					(End)	08/26/15 23:09		
Total/NA	Prep	300_Prep			301361	08/24/15 09:49	EAT	TAL CHI
Total/NA	Analysis	9056A		5	301945	08/27/15 10:44	EAT	TAL CHI
Total/NA	Prep	300_Prep			301361	08/24/15 09:49	EAT	TAL CHI
Total/NA	Analysis	9056A		1	301403	08/24/15 19:48	EAT	TAL CHI
Total/NA	Prep	SM 4500 P B			301750	08/26/15 11:09	CRB	TAL CHI
Total/NA	Analysis	SM 4500 P E		2	301929		JBJ	TAL CHI
					(Start)	08/27/15 10:18		
					(End)	08/27/15 10:18		

Lab Chronicle

Client: Civil & Environmental Consultants Inc
Project/Site: CCDD - Yeoman Creek

TestAmerica Job ID: 500-100254-1

Laboratory References:

TAL CHI = TestAmerica Chicago, 2417 Bond Street, University Park, IL 60484, TEL (708)534-5200

Certification Summary

Client: Civil & Environmental Consultants Inc
Project/Site: CCDD - Yeoman Creek

TestAmerica Job ID: 500-100254-1

Laboratory: TestAmerica Chicago

Unless otherwise noted, all analytes for this laboratory were covered under each certification below.

Authority	Program	EPA Region	Certification ID	Expiration Date
Illinois	NELAP	5	100201	04-30-16

The following analytes are included in this report, but certification is not offered by the governing authority:

Analysis Method	Prep Method	Matrix	Analyte
8082A	3541	Solid	Polychlorinated biphenyls, Total
8260B	5035	Solid	1,3-Dichloropropene, Total
8270D	3541	Solid	Aldicarb
Moisture		Solid	Percent Moisture
Moisture		Solid	Percent Solids

TestAmerica

THE LEADER IN ENVIRONMENTAL TESTING

2417 Bond Street, University Park, IL 60484
Phone: 708.534.5200 Fax: 708.534.5211

Chain of Custody Record

Lab Job #: 500-100254

Chain of Custody Number:

Page ____ of ____

Temperature °C of Cooler: 3.4

(optional)

Report To
Contact: DAVID LUTZ
Company: CEC
Address:
Address:
Phone:
Fax:
E-Mail: DLUTZ@CECINC.COM

(optional)

Bill To
Contact:
Company:
Address:
Address:
Phone:
Fax:
PO#/Reference#

Client: CEC
Client Project #: 121-067
Project Name: YEOMAN CREEK / TERRACE NURSING HOME
Project Location/State: WAUKEGAN, IL
Lab Project #:
Sampler: DAVID LUTZ
Lab PM: BONNIE

Preservative Key

500-100254 COC

Lab ID	MS/MSD	Sample ID	Sampling Date	Sampling Time	# of Containers	Matrix	Parameter: FULL CLP LIST	Comments
1		SB-3A 7-8'	8/21/15	1030	7	S	✓	
2		SB-4A 6-7'	8/21/15	100	7	S	✓	
3		SB-5A 6-7'	8/21/15	949	7	S	✓	
4		SB-7A 6-7'	8/21/15	900	7	S	✓	
5		SB-2A 7-8'	8/21/15	854	7	S	✓	

Turnaround Time Required (Business Days)
___ 1 Day ___ 2 Days ___ 5 Days ✓ 7 Days ___ 10 Days ___ 15 Days ___ Other
Requested Due Date ____

Sample Disposal
☐ Return to Client ☐ Disposal by Lab ☐ Archive for ____ Months (A fee may be assessed if samples are retained longer than 1 month)

Relinquished By	Company	Date	Time	Received By	Company	Date	Time
DAVID LUTZ	CEC	8/21/15	11:50	Gregory Komperda	CEC	8/21	11:50
Gregory Komperda	CEC	8/21/15	1:05pm	[illegible]	TA	8/21/15	13:05
[illegible]	TA	8/21/15	1575	[illegible]	TAL	08/21/15	1575

Lab Courier
Shipped

Matrix Key
WW – Wastewater
W – Water
S – Soil
SL – Sludge
MS – Miscellaneous
OL – Oil
A – Air
SE – Sediment
SO – Soil
L – Leachate
WI – Wipe
DW – Drinking Water
O – Other

Client Comments

Lab Comments:

Elmhurst

503325

8/28/2015

Login Sample Receipt Checklist

Client: Civil & Environmental Consultants Inc

Job Number: 500-100254-1

Login Number: 100254
List Number: 1
Creator: Kelsey, Shawn M

List Source: TestAmerica Chicago

Question	Answer	Comment
Radioactivity wasn't checked or is </= background as measured by a survey meter.	True	
The cooler's custody seal, if present, is intact.	True	
Sample custody seals, if present, are intact.	True	
The cooler or samples do not appear to have been compromised or tampered with.	True	
Samples were received on ice.	True	
Cooler Temperature is acceptable.	True	
Cooler Temperature is recorded.	True	3.4c
COC is present.	True	
COC is filled out in ink and legible.	True	
COC is filled out with all pertinent information.	True	
Is the Field Sampler's name present on COC?	True	
There are no discrepancies between the containers received and the COC.	True	
Samples are received within Holding Time.	True	
Sample containers have legible labels.	True	
Containers are not broken or leaking.	True	
Sample collection date/times are provided.	True	
Appropriate sample containers are used.	True	
Sample bottles are completely filled.	True	
Sample Preservation Verified.	True	
There is sufficient vol. for all requested analyses, incl. any requested MS/MSDs	True	
Containers requiring zero headspace have no headspace or bubble is <6mm (1/4").	True	
Multiphasic samples are not present.	True	
Samples do not require splitting or compositing.	True	
Residual Chlorine Checked.	N/A	

APPENDIX C

BACKYARD GAS PROBE BORING LOGS AND AS-BUILTS

Site Number: CHE 8092D County: Lake

Site Name: Yeoman Creek Landfill Well #: LFG 340

State Plane Coordinate: X 1,114,480 Y 2,085,623 (or) Latitude: ___ o ___ ' ___ " Longitude: ___ o ___ ' ___ " Borehole #: LFG 340

Surveyed by: _____ IL Registration #: _____

Drilling Contractor: Johnson Probing Driller: Erik Johnson

Consulting Firm: Civil & Environmental Consultants, Inc. Geologist: David Lutz

Drilling Method: Geoprobe MC5 System (2.25") Drilling Fluid (Type): No Fluids Used

Logged By: David Lutz Date Started: 8/21/15 Date Finished: 8/21/15

Report Form Completed By: David Lutz Date: 8/24/15

ANNULAR SPACE DETAILS

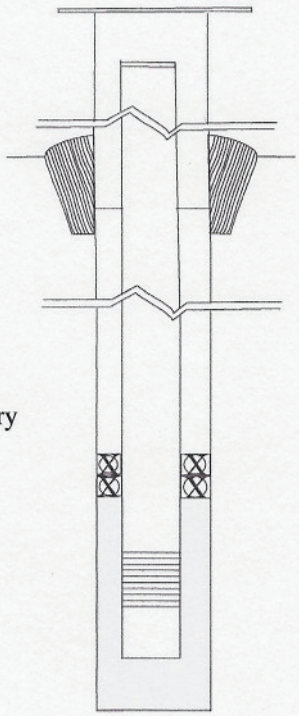

Elevations (MSL)*	Depths (BGS)	(.01ft.)
	0.0	Top of Protective Casing
	0.5	Top of Riser Pipe
		Ground Surface
		Top of Annular Sealant
		Static Water Level (After Completion)
	1.0	Top of Seal
	2.0	Top of Sand Pack
	1.5	Top of Screen
	8.5	Bottom of Screen
	8.5	Bottom of Well
	10	Bottom of Borehole

* Referenced to a National Geodetic Datum

Type of Surface Seal: Concrete

Type of Annular Sealant: None

Installation Method: _____

Setting Time: _____

Type of Bentonite Seal - - Granular, Pellet, Slurry (Choose One)

Installation Method: Gravity

Setting Time: _____

Type of Sand Pack: Quartz

Grain Size: #5 (Sieve Size)

Installation Method: Gravity

Type of Backfill Material: Bentonite (if applicable)

Installation Method: Gravity

WELL CONSTRUCTION MATERIAL

(Choose one type of material for each area)

Protective Casing	SS304, SS316, PTFE, PVC, or Other
Riser Pipe Above W.T.	SS304, SS316, PTFE, PVC, or Other
Riser Pipe Below W.T.	SS304, SS316, PTFE, PVC, or Other
Screen	SS304, SS316, PTFE, PVC, or Other

CASING MEASURMENTS

Diameter of Borehole (inches)	2.25
ID of Riser Pipe (inches)	1.0
Protective Casing Length (feet)	flush
Riser Pipe Length (feet)	1.0
Bottom of Screen to End Cap (feet)	0.1
Screen Length (1st slot to last slot) (feet)	7.0
Total Length of Casing (feet)	8.0
Screen Slot Size **	0.010

**Hand-Slotted Well Screens are Unacceptable

Site Number: CHE 8092D County: Lake

Site Name: Yeoman Creek Landfill Well #: LFG 341

State Plane Coordinate: X 1,114,552 Y 2,085,624 (or) Latitude: ___ o ___ ' ___ " Longitude: ___ o ___ ' ___ " Borehole #: LFG 341

Surveyed by: _____ IL Registration #: _____

Drilling Contractor: Johnson Probing Driller: Erik Johnson

Consulting Firm: Civil & Environmental Consultants, Inc. Geologist: David Lutz

Drilling Method: Geoprobe MC5 System (2.25") Drilling Fluid (Type): No Fluids Used

Logged By: David Lutz Date Started: 8/21/15 Date Finished: 8/21/15

Report Form Completed By: David Lutz Date: 8/24/15

ANNULAR SPACE DETAILS

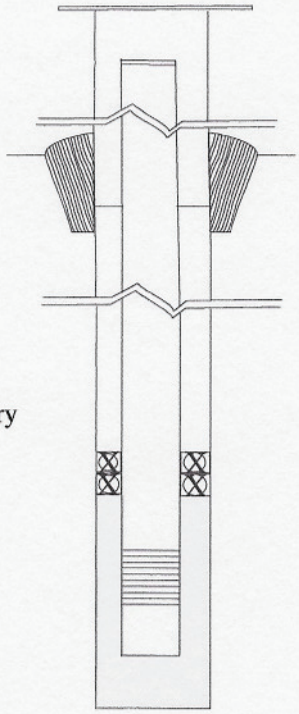

Elevations (MSL)*	Depths (BGS) (.01ft.)	
	0.0	Top of Protective Casing
	0.5	Top of Riser Pipe
		Ground Surface
		Top of Annular Sealant
		Static Water Level (After Completion)
	1.0	Top of Seal
	2.0	Top of Sand Pack
	1.5	Top of Screen
	10.5	Bottom of Screen
	10.5	Bottom of Well
	0	Bottom of Borehole

* Referenced to a National Geodetic Datum

Type of Surface Seal: Concrete

Type of Annular Sealant: None

Installation Method: _____

Setting Time: _____

Type of Bentonite Seal - - Granular, Pellet, Slurry (Choose One)

Installation Method: Gravity

Setting Time: _____

Type of Sand Pack: Quartz

Grain Size: #5 (Sieve Size)

Installation Method: Gravity

Type of Backfill Material: Bentonite (if applicable)

Installation Method: Gravity

WELL CONSTRUCTION MATERIAL

(Choose one type of material for each area)

Protective Casing	SS304, SS316, PTFE, PVC, or Other
Riser Pipe Above W.T.	SS304, SS316, PTFE, PVC, or Other
Riser Pipe Below W.T.	SS304, SS316, PTFE, PVC, or Other
Screen	SS304, SS316, PTFE, PVC, or Other

CASING MEASURMENTS

Diameter of Borehole (inches)	2.25
ID of Riser Pipe (inches)	1.0
Protective Casing Length (feet)	flush
Riser Pipe Length (feet)	1
Bottom of Screen to End Cap (feet)	0.1
Screen Length (1st slot to last slot) (feet)	9.0
Total Length of Casing (feet)	10.0
Screen Slot Size **	0.010

**Hand-Slotted Well Screens are Unacceptable

Site Number: CHE 8092D County: Lake

Site Name: Yeoman Creek Landfill Well #: LFG 342

State Plane Coordinate: X 1,114,611 Y 2,085,608 (or) Latitude: ___ o ___ ' ___ " Longitude: ___ o ___ ' ___ " Borehole #: LFG 342

Surveyed by: _____ IL Registration #: _____

Drilling Contractor: Johnson Probing Driller: Erik Johnson

Consulting Firm: Civil & Environmental Consultants, Inc. Geologist: David Lutz

Drilling Method: Geoprobe MC5 System (2.25") Drilling Fluid (Type): No Fluids Used

Logged By: David Lutz Date Started: 8/21/15 Date Finished: 8/21/15

Report Form Completed By: David Lutz Date: 8/24/15

ANNULAR SPACE DETAILS

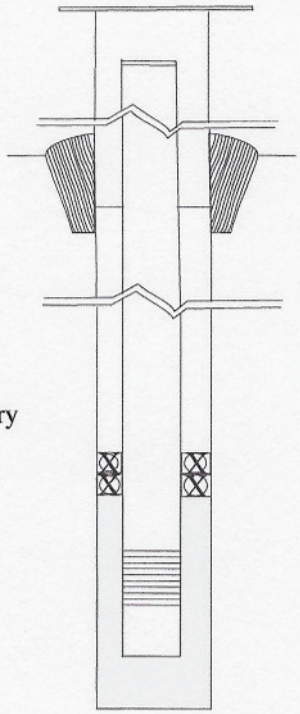

Elevations (MSL)*	Depths (BGS)	(.01ft.)
	0.0	Top of Protective Casing
	0.5	Top of Riser Pipe
		Ground Surface
		Top of Annular Sealant
		Static Water Level (After Completion)
	1.0	Top of Seal
	2.0	Top of Sand Pack
	1.5	Top of Screen
	9.0	Bottom of Screen
	9.0	Bottom of Well
	10	Bottom of Borehole

* Referenced to a National Geodetic Datum

Type of Surface Seal: Concrete

Type of Annular Sealant: None

Installation Method: _____

Setting Time: _____

Type of Bentonite Seal - - Granular, Pellet, Slurry (Choose One)

Installation Method: Gravity

Setting Time: _____

Type of Sand Pack: Quartz

Grain Size: #5 (Sieve Size)

Installation Method: Gravity

Type of Backfill Material: Bentonite (if applicable)

Installation Method: Gravity

WELL CONSTRUCTION MATERIAL

(Choose one type of material for each area)

Protective Casing	SS304, SS316, PTFE, PVC, or Other
Riser Pipe Above W.T.	SS304, SS316, PTFE, PVC, or Other
Riser Pipe Below W.T.	SS304, SS316, PTFE, PVC, or Other
Screen	SS304, SS316, PTFE, PVC, or Other

CASING MEASURMENTS

Diameter of Borehole (inches)	2.25
ID of Riser Pipe (inches)	1.0
Protective Casing Length (feet)	flush
Riser Pipe Length (feet)	1
Bottom of Screen to End Cap (feet)	0.1
Screen Length (1st slot to last slot) (feet)	7.5
Total Length of Casing (feet)	8.5
Screen Slot Size **	0.010

**Hand-Slotted Well Screens are Unacceptable